EVERSOURCE	MATERIAL SPECIFICATION ELECTRIC OPERATIONS ORGANIZATION

Wood Distribution Poles

Document Number:	Issued Date:	Revised Date:	Revision:	Applicability:
SPC-POL-001	05-Oct-16	28-Sep-26	3	All

*****This Document Supersedes M4701*****

Approved by: *Signature on File* Date: 05-Mar-25
Chad Gandolfi
Manager, T&D Standards Engineering

Rev No.	Description	Date
3	Editorial Update – Revised Appendix A Drawing to correct pole top drill pattern dimensions. Approval date remains the same.	September 28, 2026
2	Update with DCOI info and removal of Penta. Updated References.	March 7, 2025
1	Update with latest consolidation changes, Remove Gain	November 30, 2016

Table of Contents

Section		Page
1.0	Scope	3
2.0	Reference Codes and Standards	3
3.0	Ratings	3
4.0	Construction	3
5.0	Additional Material Requirements as Needed	4
6.0	Packaging and Shipping	5
7.0	Test Reports	5
Appendix A – Framing of Poles		6

1.0 Scope

1.1 This specification covers the requirements for electrical, mechanical, and safety features and characteristics of (wood poles) for use on the Eversource Electrical Distribution System.

2.0 Reference Codes and Standards

ANSI 05.1-2022	Wood Poles – Specifications and Dimensions
AWPA U1-24	Use Category System: User Specification for Treated Wood
AWPA T1-24	Processing and Treatment Standard
AWPA M2-19	Standard for the Inspection of Preservative Treated Products for Industrial Use
AWPA M3-16	Standard for the Quality Control of Preservative Treated Products for Industrial Use

3.0 Ratings

3.1 Species

3.1.1 Wood species is Southern Yellow Pine or Douglas Fir (fiber stress, 8000 lbs. per square inch, as listed in **ANSI 05.01-2022**.)

4.0 Construction

4.1 Trimming

4.1.1 Poles shall be trimmed by machine without materially changing their size or taper. Excessive splintering, indicative of dull machine knives or dry material, and “ringing” of the poles during machining are not permitted. Pole tops and butts shall be neatly sawed perpendicular to the axis of the pole. Slope of tops and butts shall not exceed ½ inch for each 6 inches of pole diameter.

4.2 Framing Details

4.2.1 Roof-flat

4.2.2 Boring-all holes 11/16 inch (± 1/16 inch) diameter. Face holes and side holes shall be perpendicular to each other and to the axis of the pole refer to Appendix 1, within the following tolerances:

.2.1. Face holes, front side: ± 1/8 inch from centerline, ± ¼ inch from pole top.

.2.2. Face holes, back side: ± ¼ inch from centerline, ± ½ inch from pole top.

.2.3. Side holes: ± ½ inch from centerline or pole top, either side.

4.3 Pole Marking

4.3.1 Poles shall be burn branded on the face with the following items:

.1.1. The Eversource logo/quality assurance mark.

.1.2. The supplier’s code or trademark.

.1.3. The plant location, and the month and year of treatment.

.1.4. Code letters denoting the pole species and preservative used.

.1.5. The class and length of pole.

.1.6. The charge number.

4.3.2 Eversource preference is branding, for any other cases pole tags/plates will be accepted as needed, with Eversource approval.

4.4 Sweep

4.4.1 Maximum sweep allowable in any pole shall be limited to one inch per ten feet of length, measured from the center of the butt and center of the top. Double sweep and reverse sweep shall be limited to **ANSI 05.1-2022**.

4.5 Knots

4.5.1 Ring knots-no more than three knots over one inch in diameter in a four inch longitudinal section shall be allowed.

4.6 Compression Wood

4.6.1 Is prohibited within the outer two inches of the pole surface.

4.7 Mechanical Damage

4.7.1 Shall be limited to **ANSI 05.1-2022** throughout the length of the pole.

5.0 Additional Material Requirements as Needed

5.1 Preservative Retention and Penetration

5.1.1 Preservatives shall be waterborne chromated copper arsenate (CCA) Type C oxide formulation or Oil-based DCOI.

Table 1 – Preservative Retention and Penetration

Type	AWPA	Retention-pcf Assay	Penetration
CCA Type C Oxide	U1-24/ T1-24	0.60	3.5” or 90% of sapwood
DCOI	U1-24/ T1-24	0.20	0.75” or 85% sapwood

6.0 Packaging and Shipping

6.1 Pole Moisture Content

6.1.1 Poles treated with CCA shall be kiln dried before treatment. Kiln drying after treatments is not permitted. All treated poles shall be stacked for a minimum of one calendar month from date of treatment in a manner that will allow free air circulation for efficient drying. All poles shall not have a moisture content (oven dry method, outer two inches) exceeding 45 percent when scheduled for shipment during the period between September 1 and February 28. If the pole moisture content exceeds 45 percent when the poles are scheduled for receipt on Eversource property between September 1 and February 28, the poles must be held by distributor and not shipped until the moisture content limitation is attained. In the period exclusive of September 1 through February 28, all poles shall not have a moisture content exceeding 60 percent. Borings for moisture content determination shall be taken from the approximate midpoint of the pole. Tests to determine moisture content shall be made in accordance with **AWPA M2-19**.

6.2 Inspection

6.2.1 The purchaser (or his representative) reserves the right to reject nonconforming poles at any point in the manufacturing process or at the point of delivery or destination. The absence of inspection or quality assurance hammer marks is considered cause for rejection. Inspection and quality control are to be performed in accordance with **AWPA M2-19 and awpaM3-16**.

7.0 Test Reports

7.1 The producer's certified test reports in accordance with **AWPA M2-19** shall be provided upon request.

Appendix A – Framing of Poles

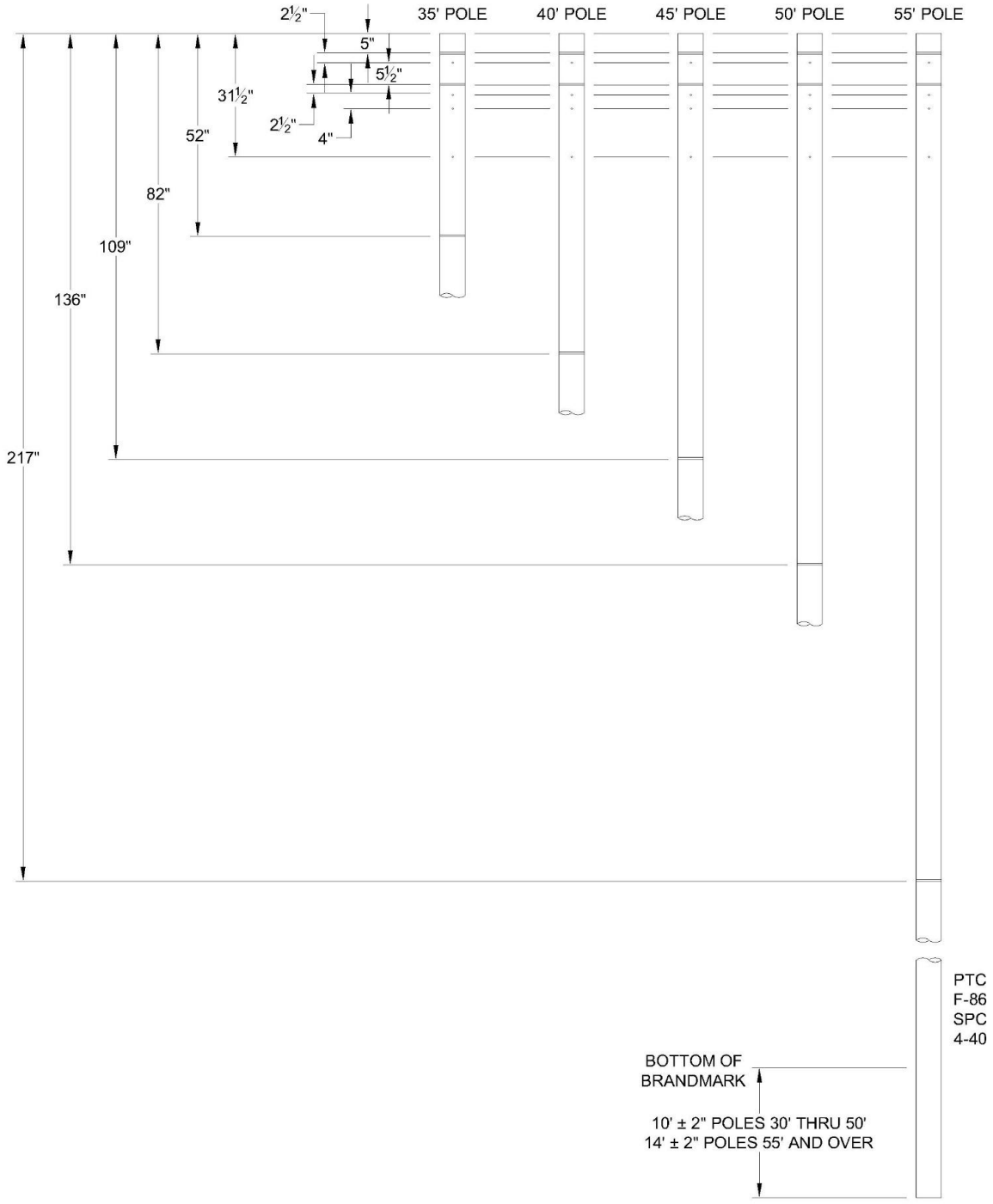

SPC-ARM-001	**MATERIAL SPECIFICATION** **EVERSOURCE**	Revision 1

Distribution Fiberglass Crossarms

1.0 Scope 2
2.0 Reference Codes and Standards 2
3.0 Construction 2
3.1 Fabrication 2
3.2 Filling 2
3.3 Strength 3
3.4 Treatment 3
3.5 Steel Characteristics 3
3.6 Flammability Test 4
4.0 Dimensions and Drilling 4
4.1 Drilling Specifications 4
4.2 Ground Wire Drilling Specification 4
5.0 Marking and Packing 4
6.0 Drilling Requirements 5

Rev #	Description	Date
1	Eversource Reformat	03/24/2017
0	Original – supersedes M4704.	09/15/2014

SPC-ARM-001	**MATERIAL SPECIFICATION** **EVERSOURCE**	Revision 1

1.0 Scope

The purpose of this standard is to provide specifications and requirements for fiberglass crossarms that are used in distribution line construction by Eversource Electrical Distribution System.

2.0 Reference Codes and Standards

The crossarms furnished under this specification shall meet all applicable requirements of the following codes and standards unless otherwise specified herein:

- ASTM G154-12a
- ASTM D3801 and ASTM D365 (ANSI/UL 94)
- ASTM D8019

3.0 Construction

3.1 Fabrication

3.1.1 Crossarms shall be pultruded fiberglass composite beams with nominal outer dimensions of 3.625 in x 4.625 in to allow attachment of industry standard utility hardware.

3.1.2 Fabrication shall be performed in accordance with the manufacturer's technical drawings. Material substitutions or deviations from the approved drawings shall not be made without prior written approval.

3.1.3 Drilling or punching of holes shall be done in such a manner as to produce cylindrical holes normal to the plane of the material.

3.2 Filling

3.2.1 All crossarms shall be made from fiberglass fill with closed cell polyurethane foam sealant.

3.2.2 Impact and UV resistant end caps shall be bonded to the crossarm ends to seal against moisture and contaminants

3.2.3 Fiberglass reinforcement shall be boron-free to prevent corrosive failures.

3.2.4 Crossarms shall be specified in gray or brown color.

3.3 Strength

3.3.1 Crossarms shall meet the vertical and horizontal loads shown in Table 1 per the latest version of ASTM D8019.

Vertical and Horizontal Strength Ratings	
Fiberglass Crossarm	**Min Vertical Load per Side**
3 5/8'' x 4 5/8'' x 5' 7" Tangent Crossarm	4,000 lbs.
3 5/8'' x 4 5/8'' x 8' Tangent Crossarm	3,500 lbs.
3 5/8'' x 4 5/8'' x 10' Tangent Crossarm	2,750 lbs.
3 5/8'' x 4 5/8'' x 10', Fiberglass Heavy Duty Crossarm (BROWN) EMA	5,400 lbs.
3 5/8'' x 4 5/8'' x 13' Tangent Crossarm	2,100 lbs.
Fiberglass Crossarm	**Min Horizontal Load (2 Wires per Arm)**
4 5/8'' x 3 5/8'' x 8' Dead-end Crossarm	14,700 lbs.
4 5/8'' x 3 5/8'' x 10' Dead-end Crossarm	12,250 lbs.
Tangent Alley Fiberglass Crossarm	**Min Vertical Load per Side**
3 5/8'' x 4 5/8'' x 8', Fiberglass Alley Arm	4,000 lbs.
3 5/8'' x 4 5/8'' x 10', Fiberglass Alley Arm	3,000 lbs.

Table 1 – Vertical and Horizontal Strength Ratings

3.4 Treatment

3.4.1 An abrasion resistant external coating is required to prevent UV degradation of the resin.

3.4.2 A thermally bonded external coating must be applied to the fiberglass to prevent the material from blooming.

3.4.3 A coating must be able to meet a minimum of 10,000 hours exposure in a UV test chamber. Treatment shall be tested according to the latest version of ASTM G154-12a.

3.5 Steel Characteristics

3.5.1 Galvanizing shall be performed in accordance with the applicable requirements of ASTM A123, A153, and/or F2329.

3.5.2 All bolts, nuts, and threaded rods shall conform to IEEE C135.80.

A. In addition, all bolts shall conform to SAE J429 Grade 5.

3.5.3 All eye nuts shall conform to ANSI C135.80.

3.5.4 All mounts, washers, and other steel hardware shall conform to ASTM A36.

3.5.5 All holes in steel shall be added prior to galvanizing

3.6 Flammability Test

3.6.1 Crossarms shall be tested in compliance with the latest version of ASTM D3801 and ASTM D365 (ANSI/UL 94).

4.0 Dimensions and Drilling

4.1 Drilling Specifications

4.1.1 Dimensions and drilling shall be accordance with the drawings of this specification. All holes shall be 11/16'' in diameter, unless otherwise noted on drawings, with a +/- 1/32'' tolerance. Drawings are not to scale.

4.1.2 All drilling holes shall be done prior to treatment.

4.1.3 Drilling tolerances shown in Table 2.

Tolerance (+/-)	
Pin to Pin	1/8''
From end of arm to first pin	1/4''

Table 2 – Tolerance in This Table Apply to All Figures in This Standard

4.2 Ground Wire Drilling Specification

4.2.1 3/16" pilot holes shall be drilled on the underside of the crossarm for possible insertion of wire holders to support a ground wire. See drawings for exact spacing per crossarm.

5.0 Marking and Packing

5.1.1 Crossarms shall be identified on the end caps using the manufacture's name and model.

5.1.2 Reasonable care shall be taken to avoid damage to the crossarms during handling and transportation.

5.1.3 Crossarms shall be stacked and packaged in quantities capable of forklift handling.

6.0 Drilling Requirements

Figure	Description
1	3 5/8'' x 4 5/8'' x 5' 7", Fiberglass Tangent Crossarm
2	3 5/8'' x 4 5/8'' x 8', Fiberglass Tangent Crossarm
3	3 5/8'' x 4 5/8'' x 10', Fiberglass Tangent Crossarm
4	3 5/8'' x 4 5/8'' x 10', Fiberglass Tangent Crossarm (BROWN) NH
5	3 5/8'' x 4 5/8'' x 13', Fiberglass Tangent
6	4 5/8'' x 3 5/8'' x 8', Fiberglass Dead-end Crossarm
7	4 5/8'' x 3 5/8'' x 10', Fiberglass Dead-end Crossarm
8	4 5/8'' x 3 5/8'' x 10', Fiberglass Dead-end Crossarm (BROWN) NH
9	3 5/8'' x 4 5/8'' x 10', Fiberglass Heavy Duty Crossarm (BROWN) EMA
10	3 5/8'' x 4 5/8'' x 21', Bare Fiberglass Arm
11	3 5/8'' x 4 5/8'' x 8', Fiberglass Alley Arm
12	3 5/8'' x 4 5/8'' x 10', Fiberglass Alley Arm

SPC-ARM-001	**MATERIAL SPECIFICATION** **EVERSOURCE**	Revision 1

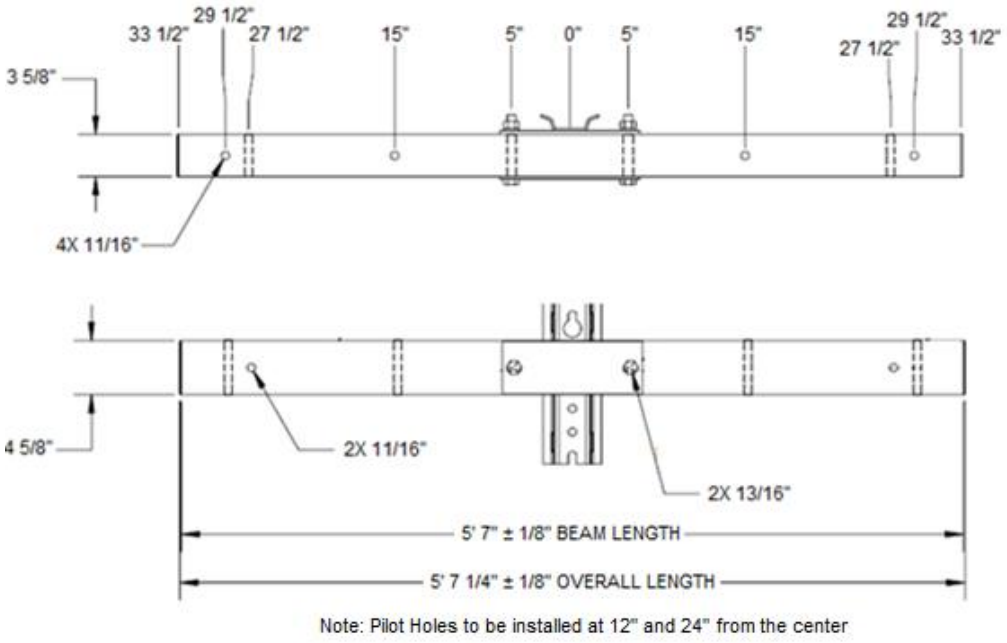

Figure 1 – 3 5/8'' x 4 5/8'' x 5' 7", Fiberglass Tangent Crossarm

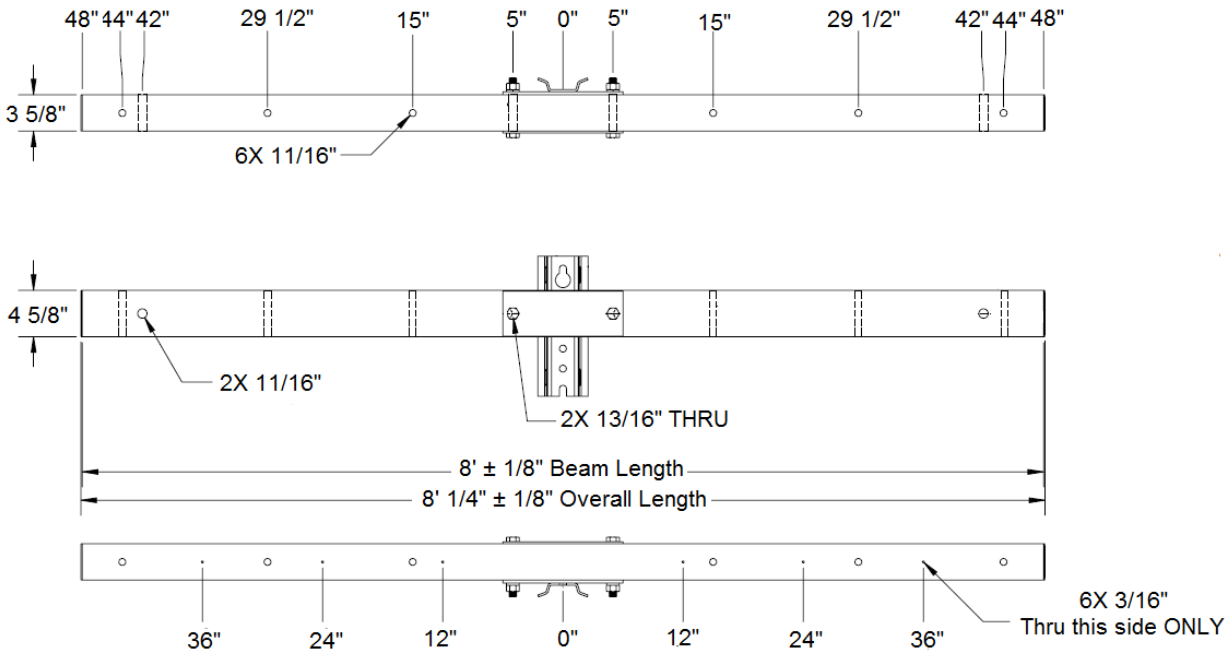

SPC-ARM-001	**MATERIAL SPECIFICATION** **EVERSOURCE**	Revision 1

Figure 2 – 3 5/8'' x 4 5/8'' x 8', Fiberglass Tangent Crossarm

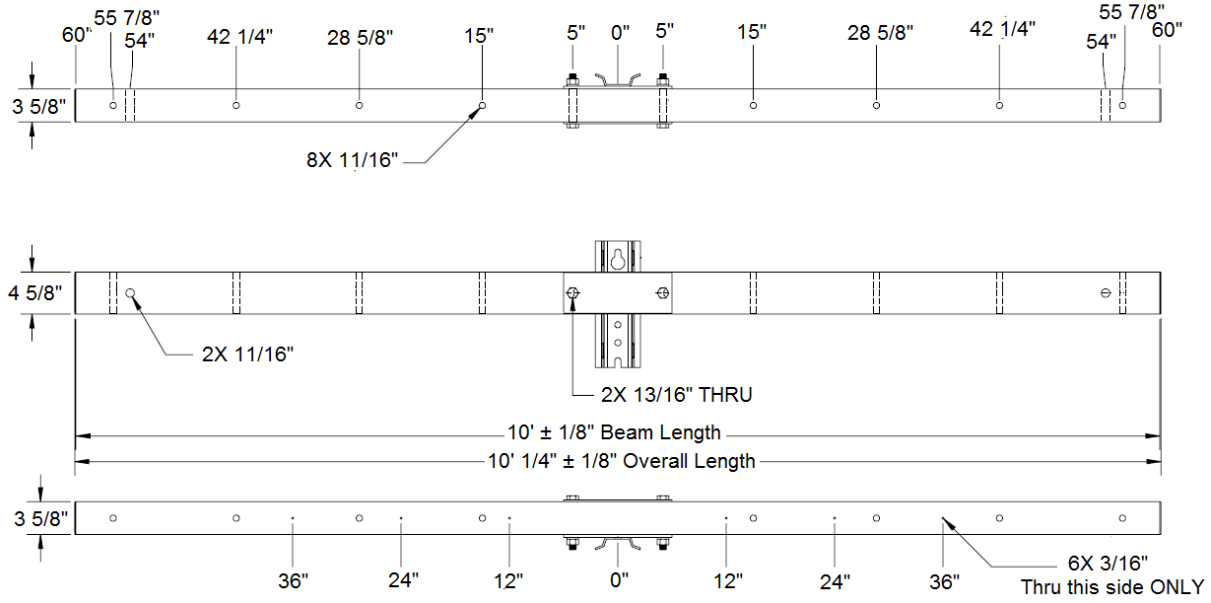

Figure 3 – 3 5/8'' x 4 5/8'' x 10', Fiberglass Tangent Crossarm

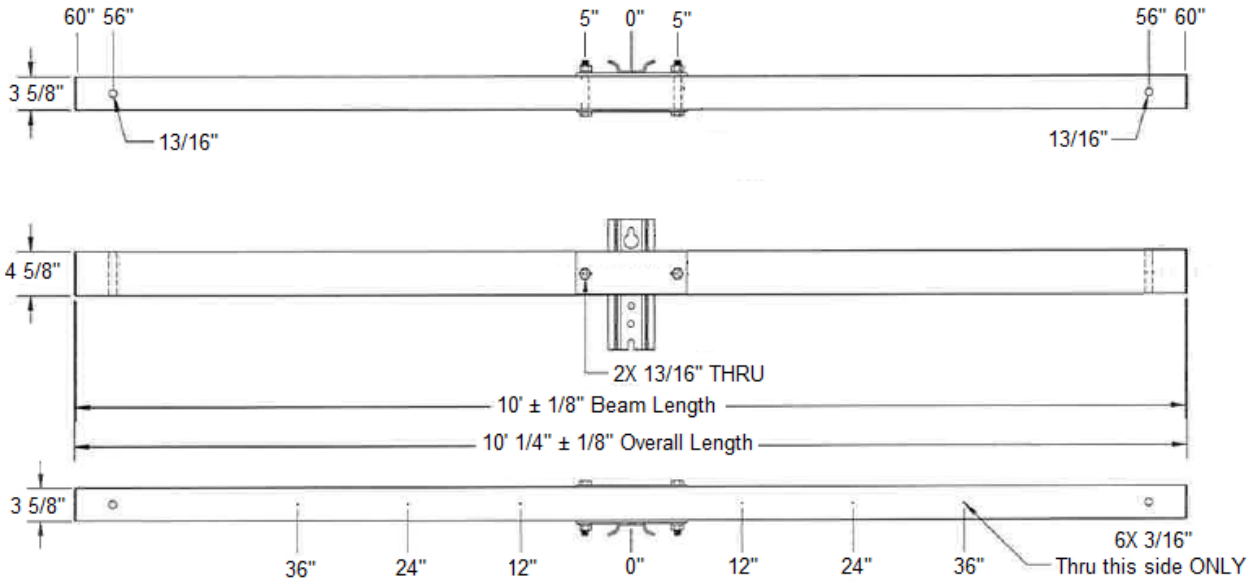

SPC-ARM-001	**MATERIAL SPECIFICATION** **EVERSOURCE**	Revision 1

Figure 4 – 3 5/8'' x 4 5/8'' x 10', Fiberglass Tangent Crossarm (BROWN)
NH ONLY

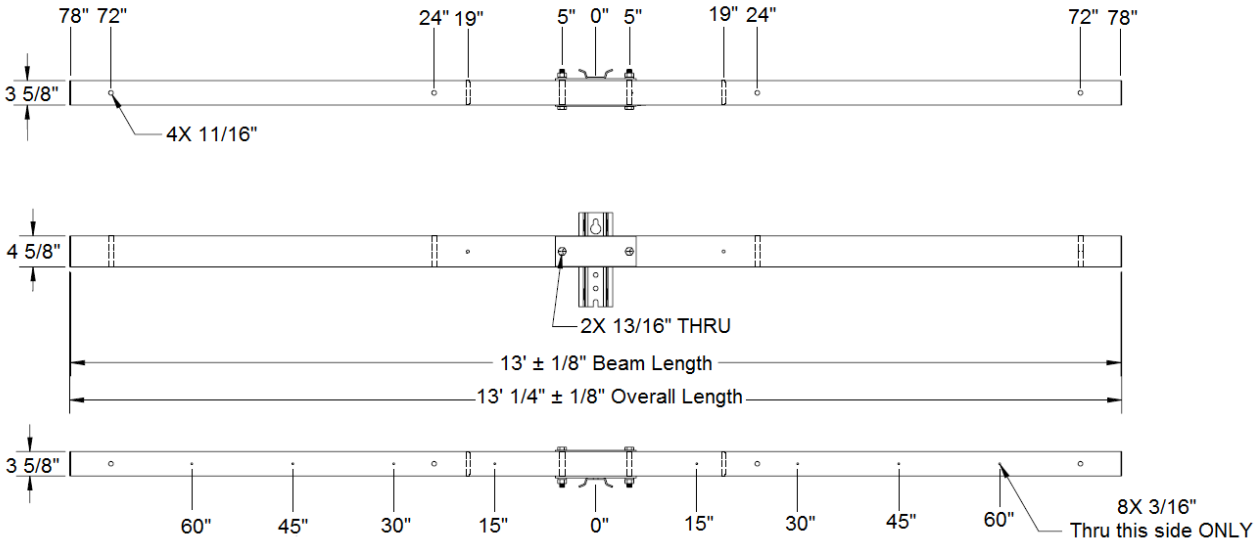

Figure 5 – 3 5/8'' x 4 5/8'' x 13', Fiberglass Tangent Crossarm

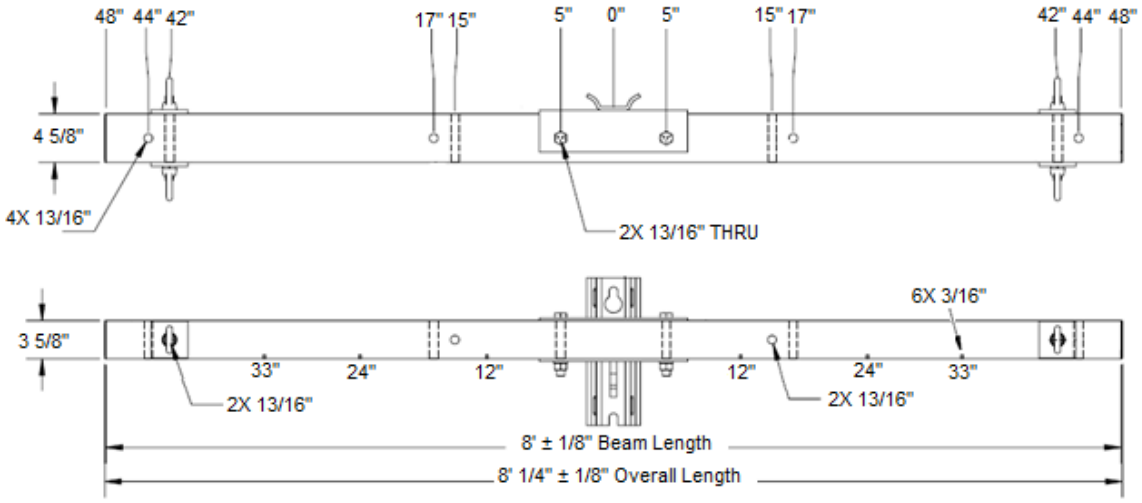

Figure 6 – 3 5/8'' x 4 5/8'' x 8', Fiberglass Dead-end Crossarm

SPC-ARM-001	MATERIAL SPECIFICATION EVERSOURCE	Revision 1

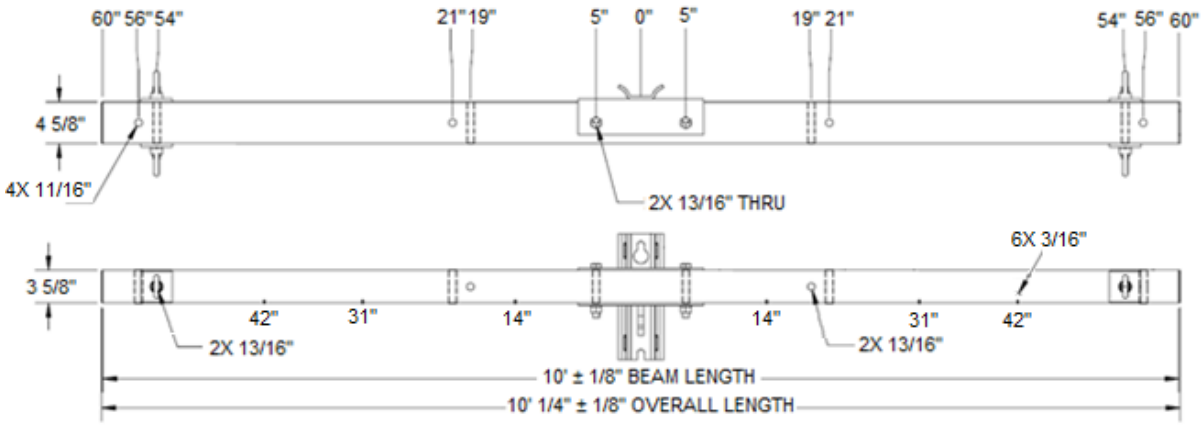

Figure 7 – 3 5/8'' x 4 5/8'' x 10', Fiberglass Dead-end Crossarm

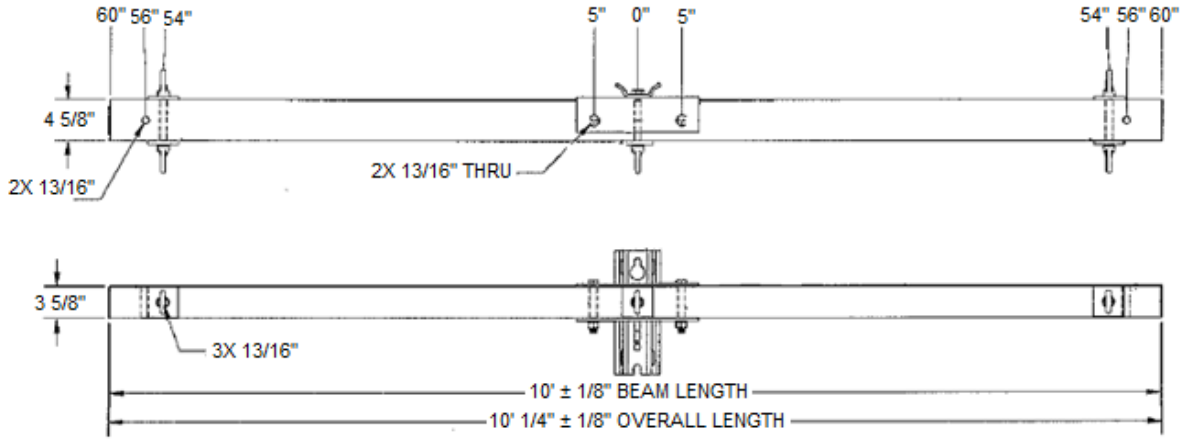

Figure 8 – 3 5/8'' x 4 5/8'' x 10', Fiberglass Dead-end Crossarm (BROWN) NH ONLY

SPC-ARM-001	MATERIAL SPECIFICATION EVERSOURCE	Revision 1

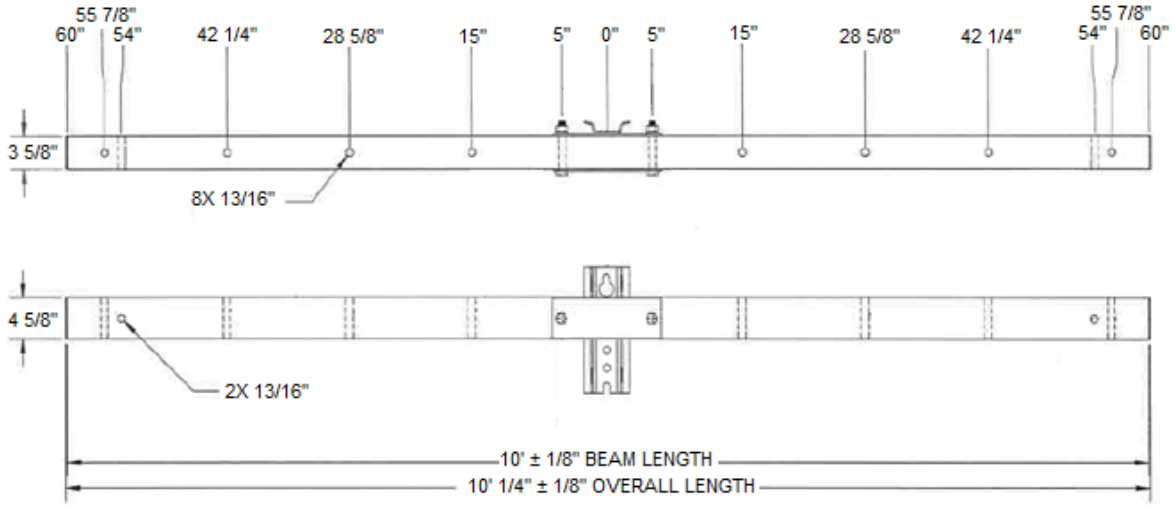

Figure 9 – 3 5/8'' x 4 5/8'' x 10', Fiberglass Heavy Duty Crossarm (BROWN)

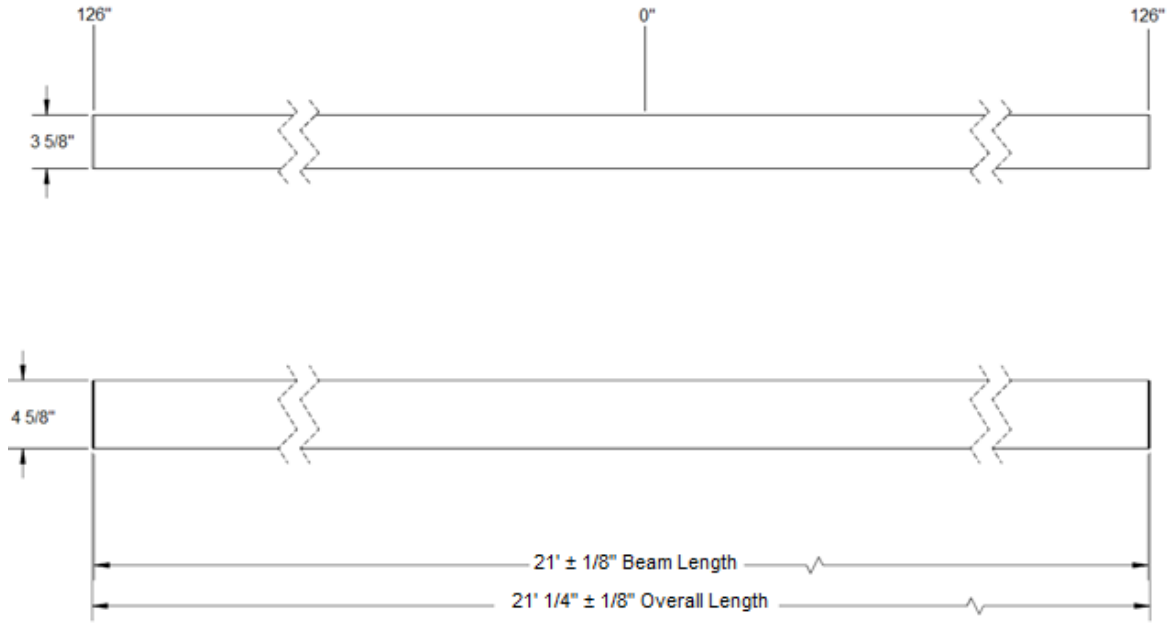

Figure 10 – 3 5/8'' x 4 5/8'' x 21'', Bare Fiberglass Crossarm

SPC-ARM-001	**MATERIAL SPECIFICATION** **EVERSOURCE**	Revision 1

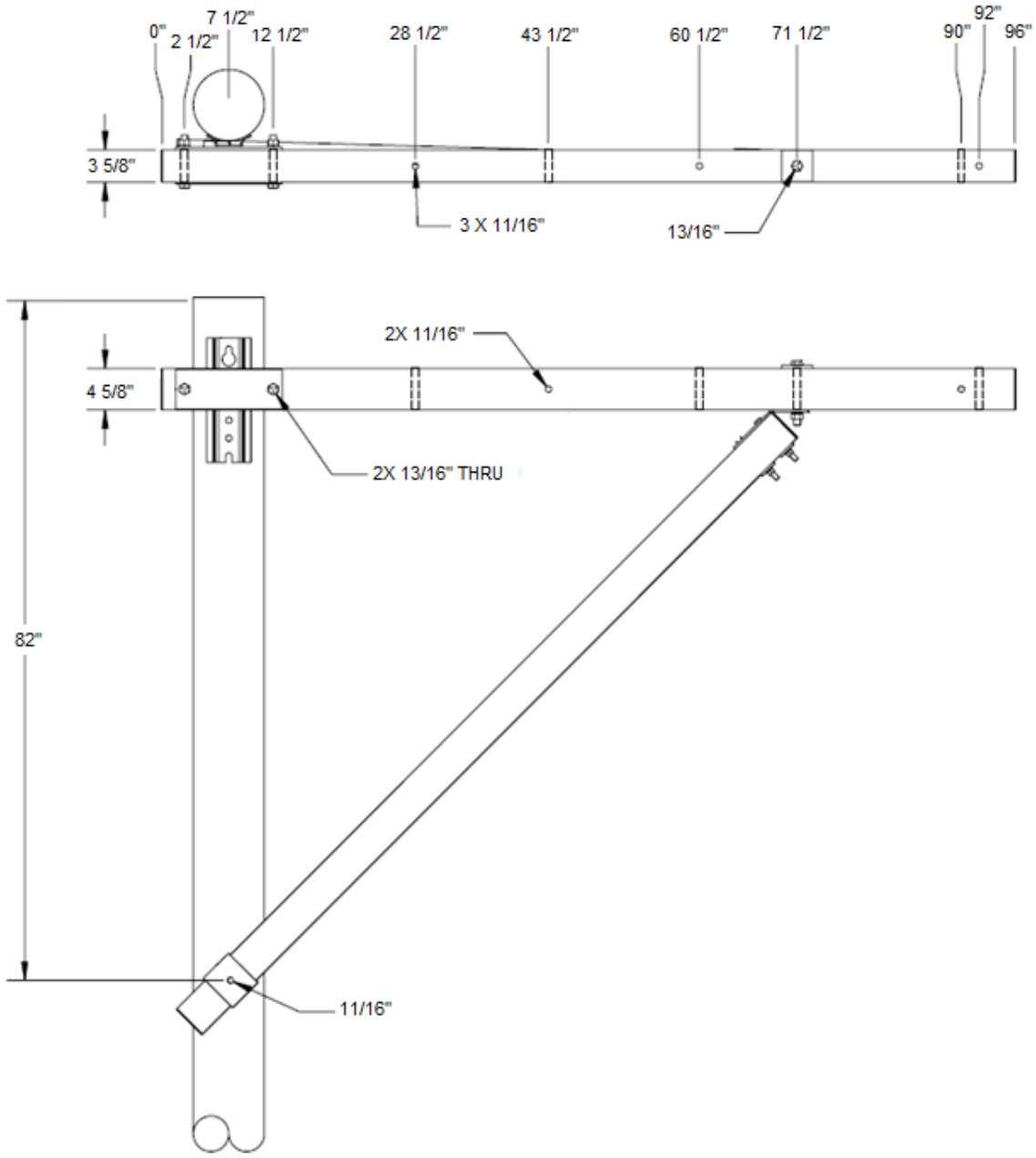

Figure 11 – 3 5/8'' x 4 5/8'' x 8', Fiberglass Alley Arm

SPC-ARM-001	**MATERIAL SPECIFICATION** **EVERSOURCE**	Revision 1

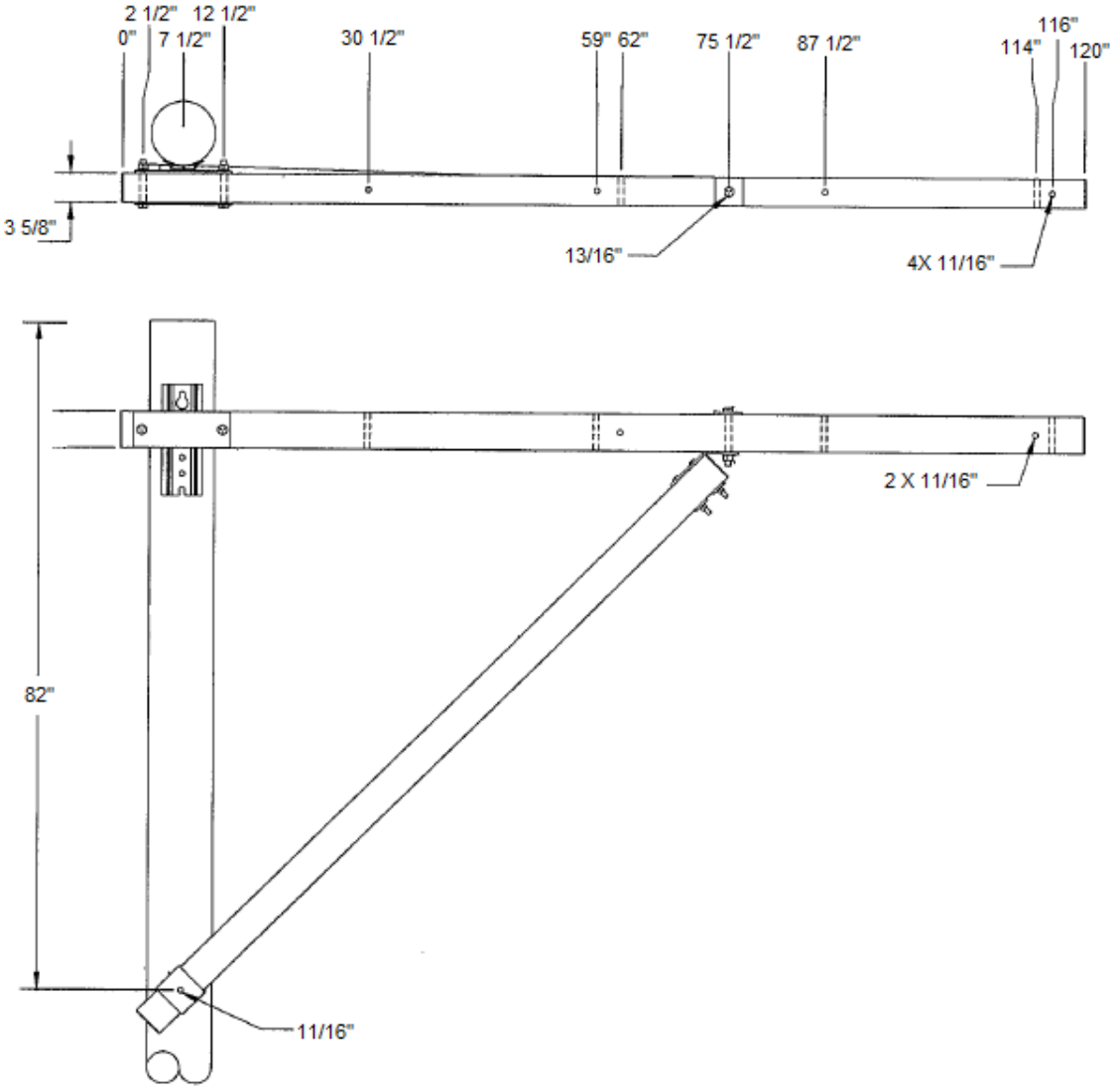

Figure 12– 3 5/8'' x 4 5/8'' x 10', Fiberglass Alley Arm

SPC-ARM-002	**MATERIAL SPECIFICATION** **EVERSOURCE**	Revision 1

Distribution Wood Crossarms

1.0 Scope 2
2.0 Reference Codes and Standards 2
3.0 Specifications 2
3.1 Species 2
3.2 Treatment and Preservation 2
3.3 Dimensions and Drilling 2
3.4 Tolerances 3
4.0 Drilling Requirements 3

Rev #	Description	Date	Approval
1	Eversource Reformat	03/3/2017	CWP
0	Original – supersedes M4700.	02/25/2013	

SPC-ARM-002	**MATERIAL SPECIFICATION** **EVERSOURCE**	Revision 1

1.0 Scope

This specification covers the requirements for wood crossarms used in the distribution line construction by Eversource Electrical Distribution Companies.

2.0 Reference Codes and Standards

The distribution wood crossarms furnished under this specification shall meet all applicable requirements of the following codes and standards unless otherwise specified herein:

- ANSI O5.3 and AWPA M5-98
- AWPA C1-98 and C25-95

3.0 Specifications

3.1 Species

3.1.1 All crossarms shall be made from Douglas Fir.

3.2 Treatment and Preservation

3.2.1 Preservatives shall be pentachlorophenol.

3.2.2 Treatment and retention shall be in compliance with the latest revision of AWPA Standard C25.

3.2.3 The preservative shall penetrate all the sapwood. It shall penetrate heartwood and sapwood longitudinally from the pin holes, bolt holes and ends, a minimum of 3 inches.

3.2.4 The treating methods shall not injure the wood. After treatment, crossarms shall be free of tarry, greasy or sticky material, and of oil exudation and pentachlorophenol, and shall remain so.

3.3 Dimensions and Drilling

3.3.1 Dimensions and drilling shall be in accordance with the drawings of this specification. All holes (including pinholes) shall be 11/16” in diameter, unless otherwise noted on drawings, with a +/- 1/32” tolerance. Drawings are not to scale.

3.3.2 All drilling shall be done prior to treatment.

SPC-ARM-002	MATERIAL SPECIFICATION EVERSOURCE	Revision 1

3.4 Tolerances

Tolerances (+/-)	
B	1/32”
D	1/8”
F	¼”

4.0 Drilling Requirements

Description	Figure Number
3.5” X 4.5” X 10’, 8 Pin Douglas Fir Crossarm	1
5.75” X 7.75” X 21’ – 4 Pin Douglas Fir Crossarm, NH	2
5.75” X 7.75” X 24’ 6” – Douglas Fir Crossarm, NH	3

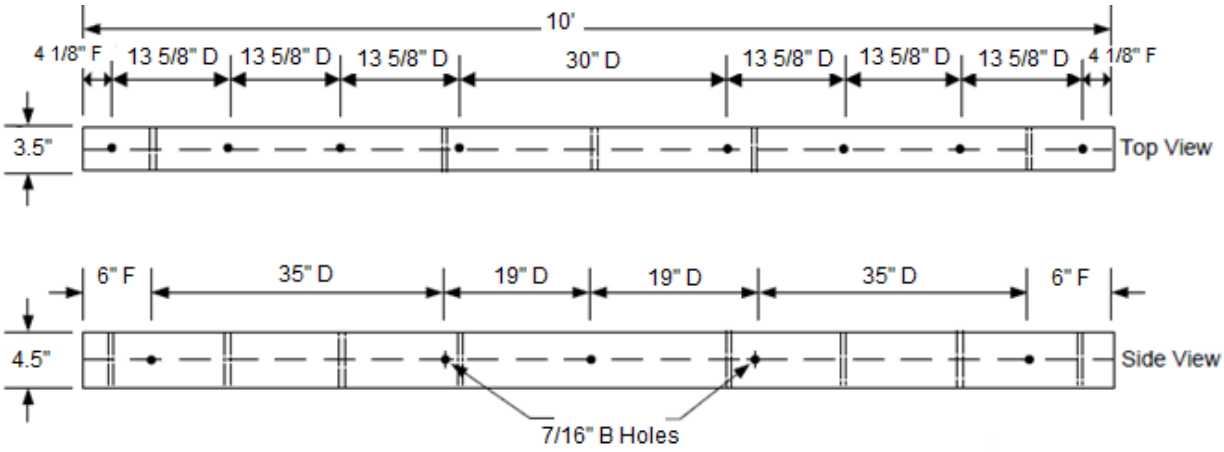

Figure 1 – 10’, 8-Pin Arm

SPC-ARM-002	**MATERIAL SPECIFICATION** **EVERSOURCE**	Revision 1

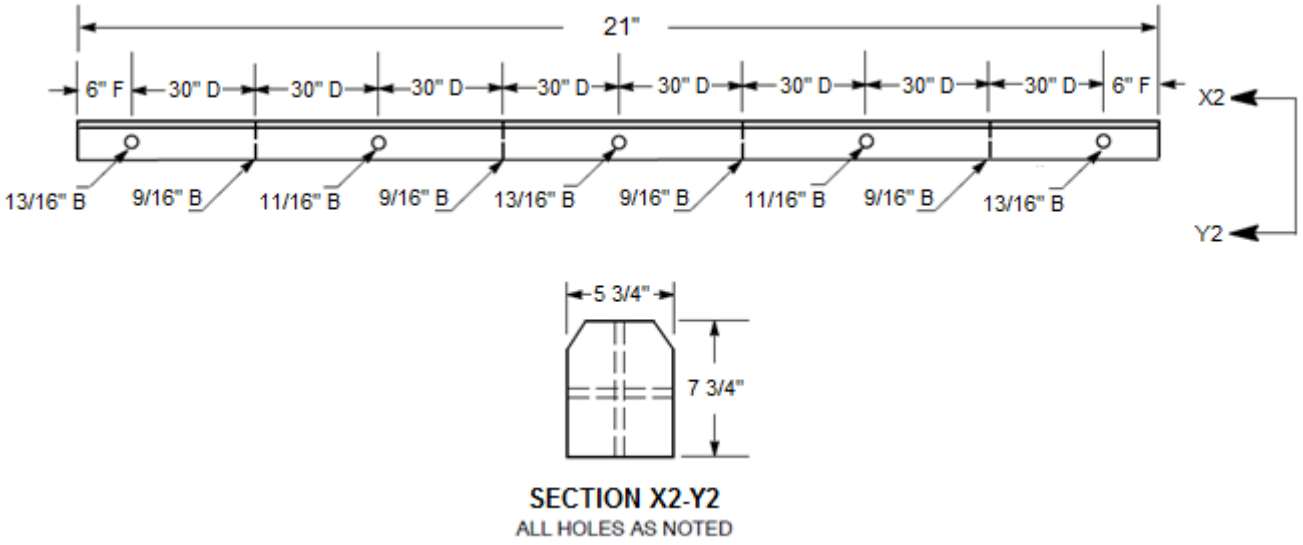

Figure 2 – 5.75” X 7.75” X 21’ – 4 Pin Arm, NH

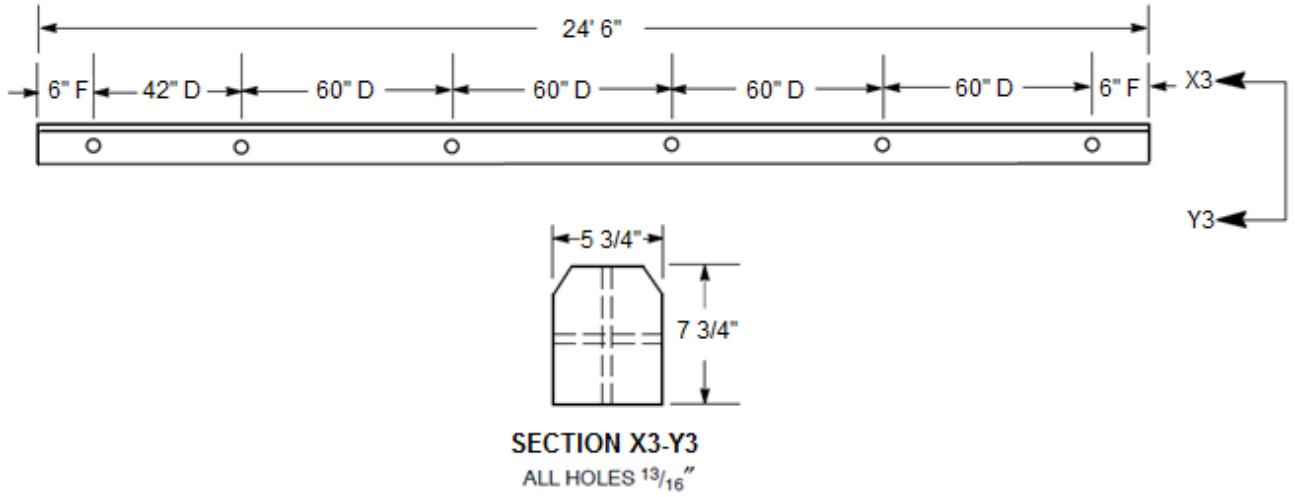

Figure 3 – 5.75” X 7.75” X 24’ 6” – 0 Pin Arm, NH

This pin shall meet all applicable requirements of ANS C135.22-1988 with the exception that longitudinal load be toward the rigid steel pole and the pin mounted as show below in the **TEST ASSEMBLY.**

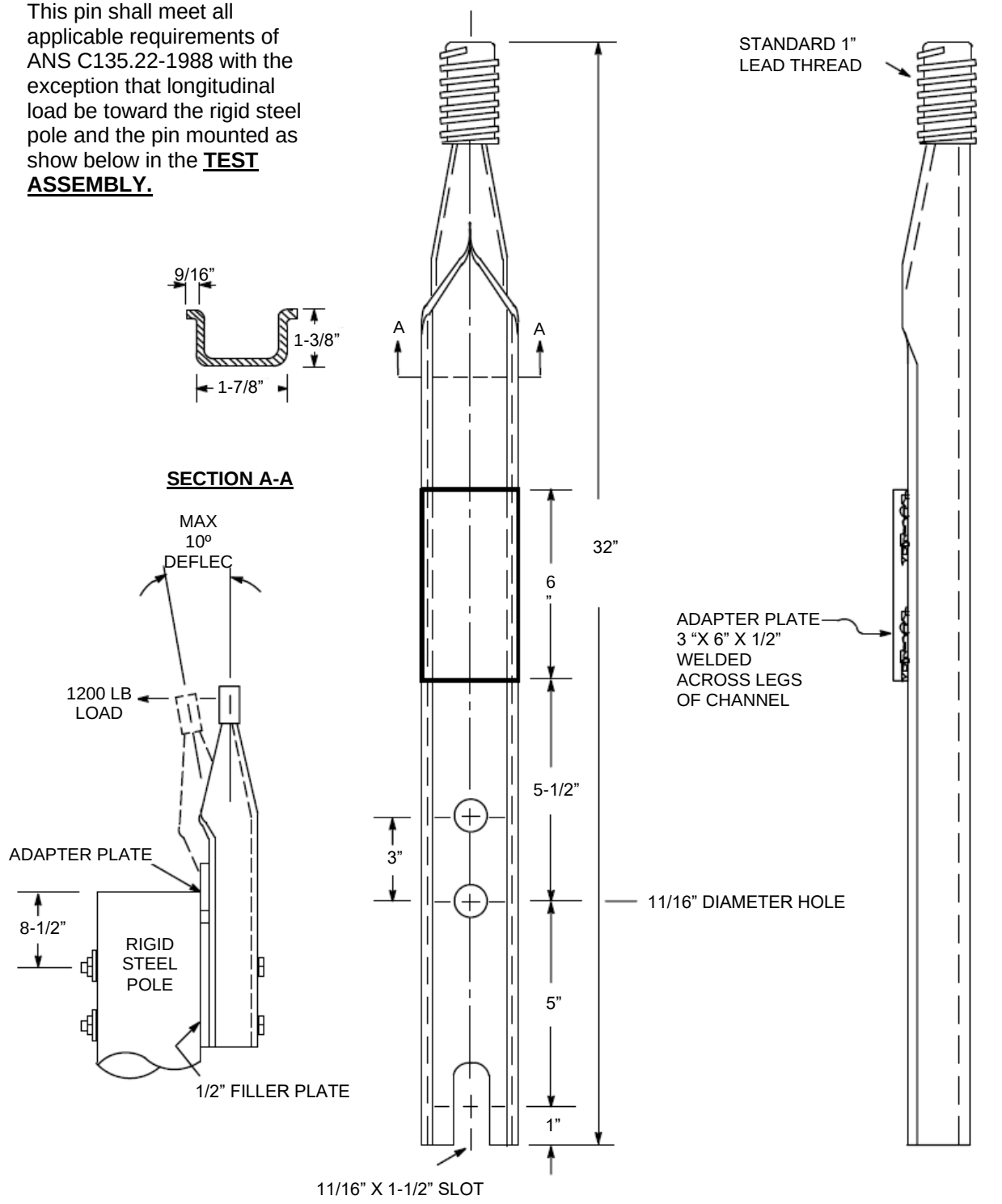

ORIGINAL 08/16/76 APPROVED 12/12/22 JH	**PIN – POLE TOP – 32”**			
	EVERSOURCE ENERGY	CONSTRUCTION STANDARD	**SPC-P-351**	**5**

STRUCTURE LIMIT A3

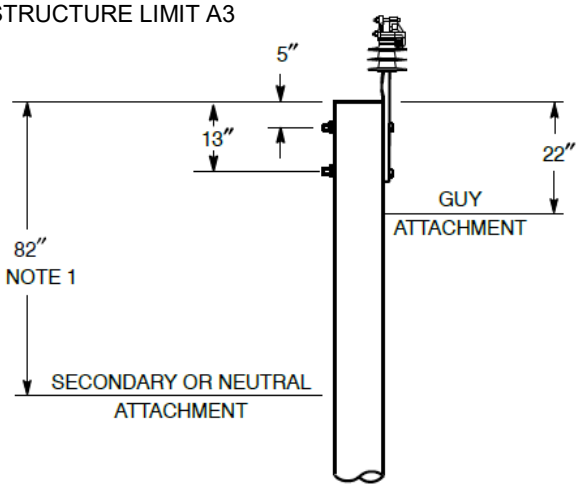

Note
For the vise top insulator the range in feet of pull of a corner when installing a conductor in the **top position** is as follows: 1/0 ACSR bare and covered, 0-9; 477 Kcmil bare and covered, 0-5.

STRUCTURE LIMIT A5

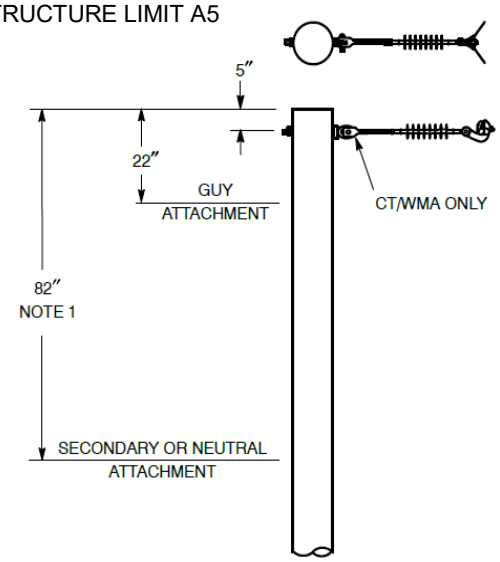

STRUCTURE LIMIT A6

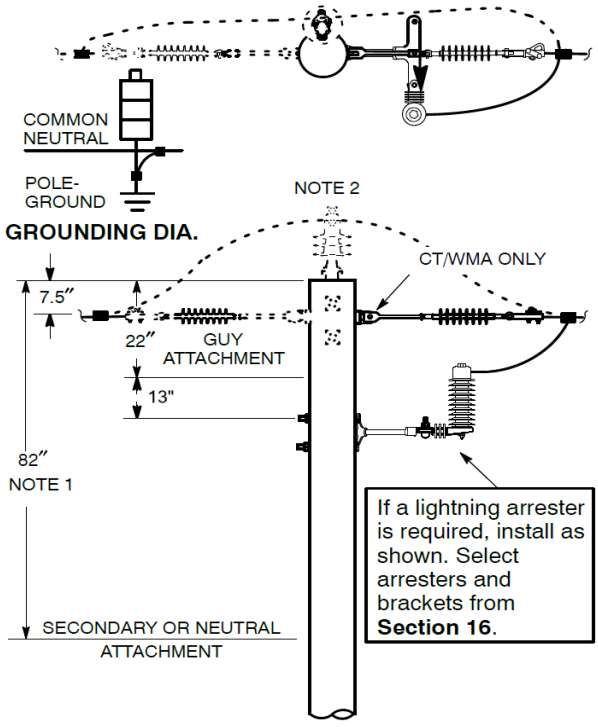

STRUCTURE LIMIT A6

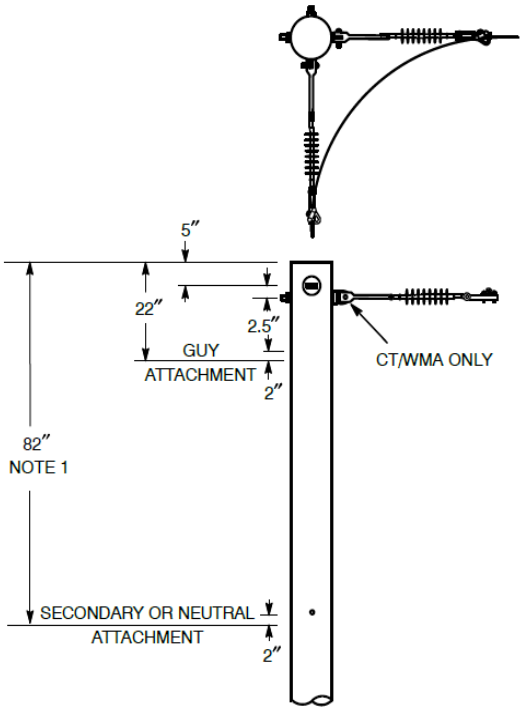

Notes
1. Refer to **DTR 04.047** for secondary and neutral attachment heights.
2. Install double deadends with a pole top pin for single phase extensions with a change in wire size.
3. Select straight strain clamps from **DTR 07.035**.

ORIGINAL	**35 KV MGY AND BELOW ARMLESS CONSTRUCTION SINGLE-PHASE TANGENT THROUGH DEAD END**			
05/24/89				
APPROVED				
12/02/24	EVERSOURCE ENERGY	CONSTRUCTION STANDARD	**DTR 10.027**	**7**

Construction Standard Variation		Construction Reference Document
A	A3 CONST 35KV 1PH 24 IN POLE TOP PIN COV AL/BAR WIRE	DTR10.027.5A
B	*Intentionally Left Blank*	---
C	A3 CONST 35KV 1PH 36 IN POLE TOP PIN COV AL/BAR WIRE	DTR10.027.5C
D	*Intentionally Left Blank*	---
E	A5 CONST 35KV 1PH LARGE CORNER AL/ACSR COV - CT/MA	DTR10.027.4E
F	A5 CONST 35KV 1PH LARGE CORNER AL/ACSR COV - NH	DTR10.027.4F
G	A5 CONST 35KV 1PH LARGE CORNER AL/ACSR BAR - CT/MA	DTR10.027.4G
H	A5 CONST 35KV 1PH LARGE CORNER AL/ACSR BAR - NH	DTR10.027.4H
I	A5 CONST 35KV 1PH LARGE CORNER COPPER WIRE - CT/MA	DTR10.027.4I
J	A6 CONST 23KV 1PH SINGLE DEADEND - CT/MA	DTR10.027.4J
K	A6 CONST 35KV 1PH SINGLE DEADEND - NH	DTR10.027.4K
L	A6 CONST 35KV 1PH DOUBLE DEADEND ANGLE - CT/MA	DTR10.027.4L
M	A6 CONST 35KV 1PH DOUBLE DEADEND ANGLE - NH	DTR10.027.4M

U= Capital Item M= Standard Item L = Lobby

M	L	K	J	I	H	G	F	E	D	C	B	A	UM	Item Description	Item Number	
										1			EA	PIN INSULATOR POLE TOP EPOXY/FG 1 IN THRD 36 IN	M	526298
2	2	1	1	1	1	1	1	1					EA	BOLT EYE GS 5/8 X 16 IN W/SQ NUT	L	601629
2	2	1	1	1	1	1	1	1		2		2	EA	BOLT MACHINE GS 5/8 X 14 IN SQ HEAD W/SQ NUT	L	536259
					1	1	1	1					EA	CLAMP ANGLE AL 1/0-556 BARE WIRE	L	514905
				1									EA	CLAMP ANGLE G 4-4/0 CU,19#8 AW,0000127 AWA	L	514906
2	2	1	1	1	1	1	1	1					EA	EYELET STD LONG G FOR 5/8 IN BOLT	L	520214
										1		1	EA	INSULATOR VISE TOP 35 KV 1 IN PIN POLY COMPOSITE	L	605137
2	2	1	1	1	1	1	1	1					EA	INSULATOR SUSP POLYMER SILC 35 KV 10M CLV FIT 18-20 IN	L	522669
	2		1	1		1		1					EA	LINK EXTENSION G 10 IN CLV/EYE ENDS 9MLB	L	551508
												1	EA	PIN INSULATOR POLE TOP G 1 IN THRD 24 IN	L	526306
										2		2	EA	WASHER SQUARE CURVED GS 3 IN 13/16 H	L	539280
2	2	1	1	1	1	1	1	1					EA	WASHER SQUARE FLAT GS 2-1/4 IN 13/16 H	L	539282

STRUCTURE LIMIT C1

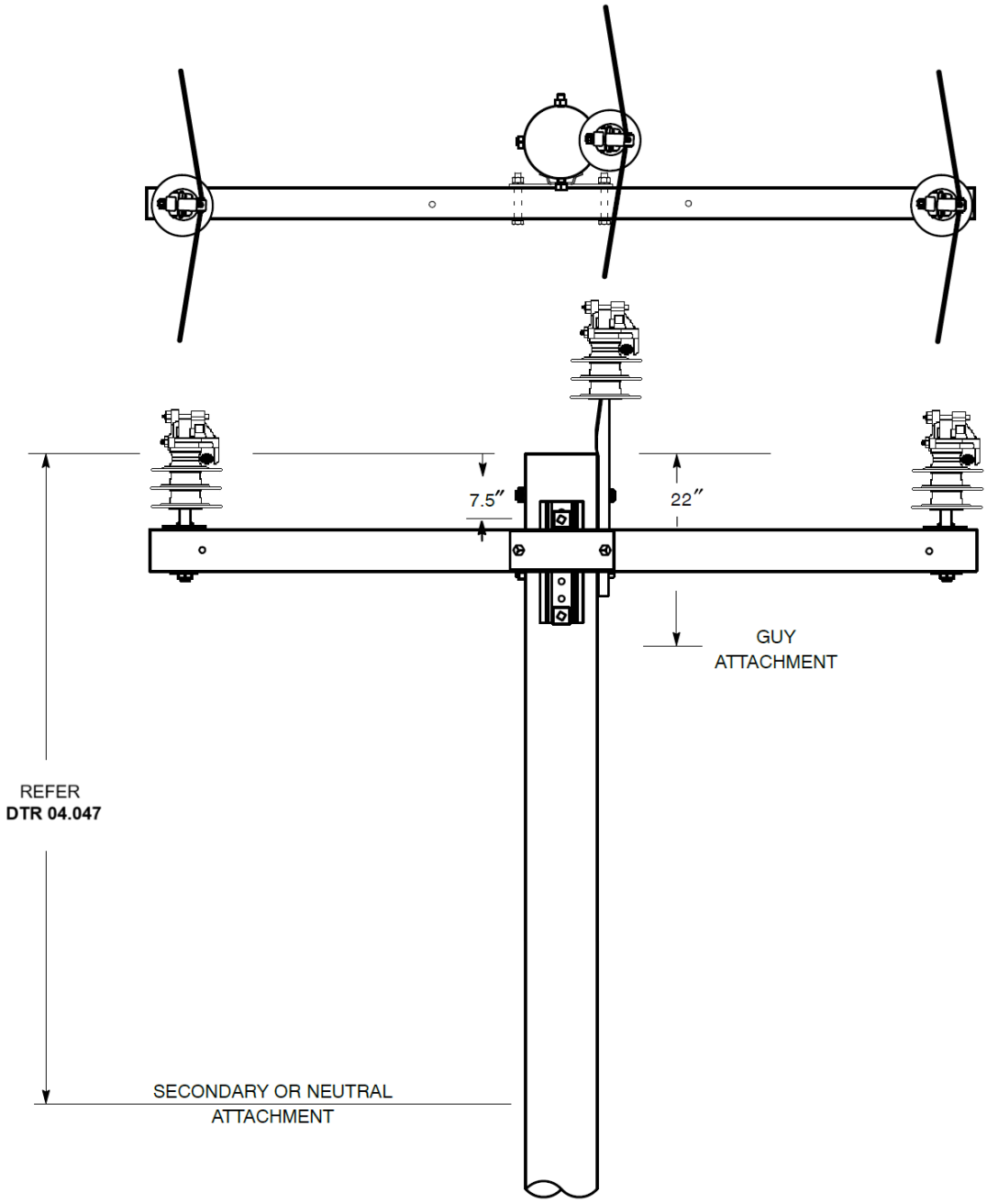

Notes

1. Refer to **DTR 07.011** Structure Limits.
2. Select guy strain insulator and associated material from **Section 06**.
3. Use 3.5 inch square washers, **Item #539295**, on the top of the crossarms when installing any insulator to avoid fracturing the composite arm.

ORIGINAL 05/13/14 APPROVED 10/30/24	**35 KV MGY AND BELOW – FIBERGLASS CROSSARM CONSTRUCTION – THREE-PHASE – TANGENT AND SMALL CORNER**			
	EVERSOURCE ENERGY	CONSTRUCTION STANDARD	**DTR 10.421**	**1**

Construction Standard Variation		Construction Reference Document
A	C1 CONST 35KV FG 3PH TAN/SMALL COR 8 FT-COVER AND BARE WIRE	DTR10.421.3A
B	*Intentionally Left Blank*	---
C	C1 CONST 35KV FG 3PH TAN/SMALL COR 10 FT- COVER AND BARE WIRE	DTR10.421.3C
D	*Intentionally Left Blank*	---
E		
F		
G		
H		
I		
J		
K		
L		
M		

U= Capital Item M= Standard Item L = Lobby

M	L	K	J	I	H	G	F	E	D	C	B	A	UM	Item Description	Item Number	
												1	EA	CROSSARM FIBERGLASS 3-5/8 X 4-5/8 IN 8 FT 6H TAN W/BKT	M	501024
										1			EA	CROSSARM FIBERGLASS 3-5/8 X 4-5/8 IN 10 FT 8H TAN W/BKT	M	501025
										4		4	EA	BOLT MACHINE GS 5/8 X 14 IN SQ HEAD W/SQ NUT	L	536259
										3		3	EA	INSULATOR VISE TOP 35 KV 1 IN PIN POLY COMPOSITE	L	605137
										2		2	EA	PIN INSULATOR 1 IN THREAD 7.75 IN SHANK 8 IN HGT GALV	L	526300
										1		1	EA	PIN INSULATOR POLE TOP G 1 IN THRD 24 IN	L	526306
										4		4	EA	WASHER SQUARE FLAT GS 3-1/2 IN FOR 5/8 BOLT	L	539295
										4		4	EA	WASHER SQUARE CURVED GS 3 IN 13/16 H	L	539280
										2		2	EA	WASHER SPRING 5/8 IN GALV	L	538784

EVERSOURCE	DISTRIBUTION SYSTEM ENGINEERING MANUAL			
Overhead General				
Doc Number:	**Issued Date:**	**DSEM Category:**	**Revision:**	**Applicability:**
06.201	19-Dec-25	Overhead Design	2	ALL

Approved by: *Signature on File* Date: 15-Dec-25
David Gladey
Vice President, Distribution Engineering

Rev No.	Description	Date
2	Added new Section 4.0 “pole set spacing”. Updated Section 8.0 (previously) 7.0 for latest conductor practices. Remove Section 8.2.1 Bare Conductor. Section 6.7 Remove PAGS and Adding PoleForeman	December 19, 2025
1	Updated Section 5.1 for Pole Class Requirements.	July 9, 2024
0	Revised to new format. Updated Table 1.	September 27, 2022

Table of Contents

Section		Page
1.0	Scope	3
2.0	Reference Documents	3
3.0	General	3
4.0	Pole Set Spacing	4
5.0	Pole Heights	4
6.0	Pole Class Size	4
7.0	Guying	6
8.0	Conductor & Pole Top Construction	6
9.0	Primary Risers	8
10.0	Secondary	8
11.0	Neutrals	9
12.0	Eversource Owned All Self-Supporting (ADSS) Cable	9
13.0	Transformer	9
14.0	Arresters	10
15.0	Cutouts	10
16.0	Grounding	10
17.0	Guy Insulators	10
18.0	Animal Guards	10
19.0	Basic Impulse Insulation Level (BIL)	10

1.0 Scope

1.1 These Construction Guidelines state basic philosophies, preferences, and standards with respect to the construction of overhead primary distribution facilities.

2.0 Reference Documents

DTR Section 04	Clearances
DTR Section 07	General Information
DTR Section 15	ADSS Fiber Optics Cable
DTR Section 16	Arresters & Grounds
DTR Section 18	Cutout and Solid Blade Disconnects
DTR Section 67	Risers
DSEM 06.231	Clearances
DSEM 06.241	Conductor Attachment
DSEM 06.301	Pole Attachment
DSEM Section 06	Overhead Design
DSEM Section 09	Arresters
DSEM Section 14	Transformer General
DSEM Section 15	Overhead Service and Secondaries
DER 84−7	Tree Wire Burndown – Causes and Mitigation
WMS 08.06	Wildlife Guards

3.0 General

3.1 These Eversource Energy Distribution Construction Standards are based upon and are in compliance with the following:

3.1.1 The National Electrical Safety Code (NESC)

3.1.2 Regulations of Connecticut state agencies.

3.1.3 Commonwealth of Massachusetts Regulations, Section 220.

3.1.4 The New Hampshire Public Utilities Commission Rules and Regulations for Electric Service, PUC300.

3.2 These guidelines apply to most overhead primary distribution construction. Additional information or exceptions to these guidelines may be found in specific sections of the Standards.

4.0 Pole Set Spacing

4.1 Pole set spacing must maintain minimum clearances to allow ample space to work on and around the pole without obstruction.

4.2 Minimum set distance for adjacent structures without equipment on them is to be no less than 15 feet. This accounts for both poles having no equipment being set on them.

4.3 Minimum set spacing for adjacent structures with equipment installed on them is to be no less than 25 feet. This spacing is required when one or both structures have equipment installed

5.0 Pole Heights

5.1 Selection is dependent on the amount of pole−top space that is required for the type of construction that is being used. Specific Construction Standards indicate the amount of pole space that is required.

5.2 In general, 45 foot poles shall be the minimum height used for circuit backbones and 40 foot poles shall be the minimum height used for single- & three- phase lateral construction.

5.3 Secondary attachments should be positioned near the bottom of the allotted pole space and care shall be taken to provide adequate clearances in the span as shown in **DTR Section 04**.

5.4 35-foot poles shall only be used for the following applications:

5.4.1 Stub poles used for guying purposes.

5.4.2 Service and streetlighting poles with secondary cable only on the pole.

5.4.3 Poles installed on private property and in rights of way that will only support secondary conductors; 40-foot poles shall be used if it is determined that primary conductors may be installed in the future.

5.4.4 In NH, solely owned line extensions where it appears reasonable that sole ownership will remain beyond three years.

5.5 When proper clearances may be obtained on existing poles that are involved in line rebuilds, economics dictate that poles in good condition remain in use. See **DSEM 06.241**.

6.0 Pole Class Size

6.1 The minimum pole class size installed on the backbone shall be Class 2. For rebuilds do not replace existing poles if the poles meet minimum loading requirements. Refer to Table 1 for more detail on minimum pole class requirements.

6.2 New poles installed in Eversource three-phase lines in distribution Rights−of−Way are to be direct embedded self−weathering steel poles, class and height to be determined by Engineering. Pole options other than steel will require approval from managers or above in Operations and Engineering.

6.3 The use of steel poles in other situations such as single-phase lines, jointly owned facilities, or other special situations is by exception only and requires approval from managers, or above, in Operations and Engineering. Steel poles shall not be used for service poles.

6.4 The following table details the minimum pole class requirements for specific installations on the distribution system.

Table 1 – Minimum Pole Class Requirements

Construction Type	Minimum Pole Class Required
Roadside	
Primary (Three-Phase) Backbone	45-foot, Class 2
Primary (Single- & Three-Phase) Laterals	40-foot, Class 2
Primary Junction & Equipment Poles*	Class 1
Distribution Right of Way	
Standard Construction & Junction Poles	Class 1 Steel
Equipment Poles*	Class 1**

NOTE: Wood poles are the primary pole choice for Distribution construction, but composite has been approved as an alternative option for environmentally sensitive areas. For service, secondary and stub poles, calculation software determines pole minimum pole class required for stub poles. Minimum class 3 poles should be installed.

* Equipment pole construction is defined as major assets installed on the pole, e.g., Reclosers, Switches, Regulators, Capacitor Banks, Stepdown Transformers, or a Three-phase Bank of Transformers, etc. Basic equipment such as cutouts, single phase transformers, stand-off brackets, etc., are not to be considered a part of the equipment requirement.

** Steel poles are the primary pole choice for ROW construction, but wood shall be used for equipment poles or poles with additional attachments outside of typical construction with Manager approval.

DTR Section 10 in the Overhead Construction book details steel pole construction, both in open and spacer configurations. For pole replacement guidelines see **DSEM 06.301**.

6.5 To determine the proper minimum pole class required, applied loads on conductors, cables, equipment, and supporting structures in both the vertical and horizontal direction must be taken into account.

6.6 Applied loads occur from weight and wind on the following: conductors and cables including ice, equipment, support equipment, and hardware. Additional loads on the pole include the effects due to guying, and guy attachment height locations.

6.7 Use IKEP PoleForeman computer program, or other Company approved program, to determine the proper pole class required. PoleForeman program can be accessed requesting to Eversource IT Department with supervisor approval.

6.7.1 Select Users Guide under the Help drop down menu for PoleForeman User Manual.

7.0 Guying

7.1 Refer to **DTR Section 06** for guying general requirements.

8.0 Conductor & Pole Top Construction

Conductor type shall be selected according to the following:

8.1 **Covered Conductor**

8.1.1 Covered conductor **shall** be used in all cases as this has proven to be the most reliable construction. However, it is only reliable when installed properly, with lightning arresters and arc protection clamps or wraparound covering, correctly applied. (See **DER 84−7** and this guide). When new covered conductor is installed:

.1.1. Install on polyethylene vise−top or tie−top insulators. Refer to **DTR Section 07**.

.1.2. Skinned areas shall be kept to a minimum. Do not skin the covering unless it is necessary to install connectors or splices.

.1.3. At locations where the covering has been skinned, and no lightning arresters will be installed, one of two methods shall be used for arc protection:

.1.3a. Wraparound covering (i.e. gel-wrap) shall be the preferred method used to restore the integrity of the covering when the skinned portions are close to the pole and/or tree contacts are likely.

.1.3b. Where it is not possible to cover a bare spot completely with wraparound covering (i.e. long skinned spans, transitions from bare conductor to covered conductor) Arc Protection Clamps (APCs) shall be installed to provide arc protection.

.1.4. At locations where the covering has been skinned, and lightning arresters will be installed, APCs or wraparound covering are not required.

8.1.2 When adding additional phases of standard covered conductor to an existing single-phase 85 mil covered conductor circuit, replacement of the 85 mil conductor is not necessary, unless the conductor is damaged. The existing covered conductor should be evaluated as listed below. When evaluating existing covered conductor:

.2.1. In the span, check the condition of the conductor and covering.

.2.1a. If the conductor is damaged, replace it.

.2.1b. If only the covering is damaged, skin it back to good covering and install wraparound covering or an APC as outlined above. If excessive skinning is required, or if skinning will result in tree related problems, replace the conductor.

.2.2. At porcelain insulators, check the condition of the conductor, covering, insulator, and tie. If an insulator replacement is required, refer to **DTR Section 07**, for insulator selection.

.2.2a. If all are good, leave the installation intact.

.2.2b. If the tie or insulator alone is deteriorated and the covering is good, install a new insulator.

.2.2c. If the covering is deteriorated and there is no damage to the conductor, skin it back to good covering, and install wraparound covering or APCs as outlined above. Install a new insulator.

.2.2d. If the conductor is damaged, splice in new covered conductor, install a new standard insulator, and install wraparound covering or APCs at the splices as outlined above.

8.1.3 If there is extensive damage throughout several spans, install new standard insulators and new covered conductor.

8.1.4 It is imperative for the protection of covered conductor, that lightning arresters and APCs, or wraparound covering, be applied properly.

8.1.5 Covered conductor is not fully insulated; it must be treated as bare conductor during installation and maintenance.

8.2 **Spacer Cable**

8.2.1 Three-phase spacer cable construction is:

.1.1 For use in treed areas where it is not possible to get the necessary clearances for crossarm construction.

.1.2 For use if required for clearances when a second circuit is needed on the same pole line.

8.2.2 Spacer cable construction will perform reliably when installed properly with lightning arresters correctly applied. (See **DER 84-7** and this guide).

8.2.3 APCs shall not be used on spacer cable. Their use would seriously reduce phase−to−phase clearance.

8.2.4 Spacer cable is not fully insulated; it must be treated as bare conductor during installation and maintenance.

8.3 **Aerial Cable**

8.3.1 Three-phase aerial cable construction is:

.1.1. For express circuits only.

.1.2. For use only where it is not practical to use less expensive crossarm or spacer cable construction.

.1.3. For use if required for clearance when a second or third circuit is needed on the same pole line (such use may reduce pole replacement).

.1.4. Not recommended for construction of an under−bridge section of an overhead line. **The Connecticut DOT prohibits** attachment of aerial cable to state bridges.

8.3.2 All aerial cables shall have their messengers and cable sheathes effectively grounded. (ANSI C2, NESC−2023 Rule 230C1).

8.3.3 The use of Y−splices and T−joints is forbidden on new aerial cable installations.

8.4 **Crossarm Construction**

8.4.1 8-foot and 10-foot composite crossarms are the standard for all three-phase applications. (See **DTR Section 10**). Use in rural and suburban areas where optimum tree-trimming can be achieved.

8.4.2 Use the compact crossarm design (4-foot and 5-foot arms) in heavily treed suburban areas, where tree trimming is restricted, and proper clearances cannot always be maintained.

8.5 **Vertical Construction**

8.5.1 Vertical construction can be considered for areas where longer spans are required, or width is restricted such as along a right−of−way shared with transmission lines. (See **DTR Section 10**).

9.0 Primary Risers

9.1 Where primary cable risers are installed:

9.1.1 No more than two Eversource Energy risers (primary and secondary combined total) shall be attached to a pole.

9.1.2 No more than one three-phase primary riser shall be attached to a pole.

9.1.3 Although not preferred, two single-phase risers may be attached to a pole.

9.1.4 The installation of both a three-phase and a single-phase primary riser on the same pole is not allowed.

9.1.5 Only one primary cable (either single- or three-phase) **shall** be installed in a riser conduit. See **DTR Section 12.**

10.0 Secondary

10.1 Secondaries shall be 1/0 triplex, except in cases where larger secondaries are required. (See **DSEM Section 13**).

10.2 Existing open wire secondary that is in good operating condition should remain in service whenever possible. When evaluating open wire secondary to determine whether it should be replaced with triplex secondary cable, consider the following factors:

10.2.1 Clearances − Primary to secondary clearances should be reviewed (see **DTR Section 04**). If it is necessary to relocate the secondary on the pole in order to obtain the clearance that is required, replace the open wire with triplex.

10.2.2 Neutral Sizing − Neutral sizing guidelines should be reviewed (see below Section 10.0 Neutrals). If the open wire secondary neutral is used as the system neutral and is insufficient for use with the primary conductors, replace the open wire with appropriately sized triplex.

10.2.3 Voltage Drop − The open wire secondary voltage drop should be calculated as shown on **DSEM Section 15**. If larger secondary conductors are required due to excessive voltage drop, replace the open wire with triplex.

10.2.4 Condition − The open wire secondaries should be examined to determine their condition. If the conductors are found to be in poor physical condition, replace the open wire with triplex.

10.2.5 Location

.5.1 If shifting several spans of open wire secondaries is required, remove the open wire and replace it with triplex.

.5.2 Single open wire secondary is more susceptible to faults. Locations where faults are likely, such as heavily treed areas, replace the open wire with triplex.

10.3 Open wire secondary that is in good reliable condition and does not require replacement according to the above guidelines, shall remain in service.

10.4 Where open wire secondary will be replaced with triplex cable, every effort should be made to locate the secondary at the attachment points indicated in **DTR Section 04 – Attachment Points for Secondary & Neutral Cable**. Where this is not possible, the preferred clearances shown on **DTR Section 04 – Separation of Facilities on a Pole** should be used.

11.0 Neutrals

11.1 Neutrals shall be sized as follows:

11.1.1 All new neutrals shall be 1/0 ACSR (or equivalent) bare conductor except when a larger conductor is needed; then use 4/0 ACSR.

11.1.2 If existing phase conductors are smaller than 1/0 ACSR (or equivalent) and a bare neutral exists, it shall be used if it is of equal size or larger than the phase conductor, except that #4 bare copper neutrals may be used under certain conditions, as noted below.

11.1.3 If existing phase conductors are equal to or larger than 1/0 ACSR (or equivalent) and a bare neutral exists, it shall be used if it is at least 1/0 ACSR (or equivalent), except that #4 bare copper neutrals may be used under certain conditions, as noted below.

Existing #4 bare copper neutrals may be used with up to 1/0 ACSR (or equivalent) phase conductors where the phase conductors are protected by line fuses (up to 140K in Connecticut, 100T in Massachusetts).

12.0 Eversource Owned All Self-Supporting (ADSS) Cable

12.1 If ADSS cable is planned to be installed, refer to **DSEM 06.231**, **DSEM 06.241** and **DTR Section 15** for installation requirements.

13.0 Transformer

13.1 Single-voltage transformers shall be used in all cases, except where **DSEM Section 14,** dictates otherwise.

NOTE:	It is imperative that for proper protection, lightning arrester leads be as short and as straight as possible. Primary taps to transformers must not be coiled. Doing so presents a significantly higher surge impedance to lightning strikes, materially increasing the effective primary to neutral arrester clamping voltage and resulting in greatly reduced lightning protection.

.1.1 Locating transformers, refer to **DSEM 06.301** for information on **Pole Replacement**.

14.0 Arresters

14.1 Lightning arresters shall be used to protect overhead lines, transformers, equipment, and riser cables from damage caused by overvoltage due to surges and lightning strokes. Arresters shall be selected and applied in accordance with the operating voltage of the equipment they are installed to protect. Refer to the **DSEM Section 09**.

15.0 Cutouts

15.1 Cutouts shall not be installed at three-phase armless locations, except for single-phase taps and single-phase risers. At locations using three-phase armless vertical construction, cutouts shall never be installed. **DTR Section 18.**

16.0 Grounding

16.1 The system neutral on a multigrounded system shall have all grounds and ground leads connected to it; i.e., equipment grounds (reclosers, regulators, capacitors, transformers, etc), secondary grounds, pole driven grounds, guys, arrester grounds, etc. For grounding on multigrounded wye, delta and unigrounded systems, refer to **DTR Section 16**.

16.2 Where two multigrounded circuits are on the same pole line, they shall share a common 1/0 ACSR (or equivalent) bare neutral. At any separation of the circuits, each circuit must have its own neutral. If circuits cross each other, their neutrals shall be bonded together. This practice shall be followed even if circuits are of different voltages or from different sources.

17.0 Guy Insulators

17.1 See **DTR Section 06.**

18.0 Animal Guards

18.1 Animal guards shall be used on all arresters and bushings on the following equipment: capacitors, capacitor switches, reclosers, regulators, sectionalizers, and transformers. Refer to **WMS 08.06 Wildlife Guards**.

19.0 Basic Impulse Insulation Level (BIL)

19.1 The insulation level to which a device can withstand a voltage impulse surge, such as those which occur during switching or lightning strikes, is described as the BIL of that device.

19.1.1 BIL is expressed in kilovolts.

19.1.2 The values within Table 2 are the minimum BIL ratings for equipment installations on their respective circuit voltages.

Table 2 – BIL per Circuit Voltage

Circuit Voltage (kV)	Circuit BIL (kV)
4.8	75
15	95
23	125
27.6	150
34.5	150/200

EVERSOURCE	DISTRIBUTION SYSTEM ENGINEERING MANUAL

Pole Tops

Doc Number:	Issued Date:	DSEM Category:	Revision:	Applicability:
06.211	19-Dec-25	Overhead Design	1	ALL

Approved by: *Signature on File* Date: 15-Dec-25
David Gladey
Vice President, Distribution Engineering

Rev No.	Description	Date
1	Updated Section 9.1 removed 556 replaced for 477	December 19, 2025
0	Original	September, 2018

Table of Contents

Section		Page
1.0	Scope	3
2.0	Reference Documents	3
3.0	Secondary/Neutral/ADSS Attachment Height	3
4.0	Existing Poles	4
5.0	Junction Poles	5
6.0	Cutouts and Lightning Arresters	5
7.0	Span Length Limitations	6
8.0	Slack Spans	6
9.0	Crossarm Guys	7

1.0 Scope

1.1 The standards herein indicate the amount of pole space required for each pole-top configuration. This standard is designed to provide enough clearance on the pole for a line worker in a bucket truck to gain access to the field side of the pole, when necessary. A minimum of 60 inches is required between the primary and secondary conductors, and to provide the maximum available working clearance, the intent is to attach the secondary or neutral conductors, or if applicable, Eversource-owned all dielectric self-supporting (ADSS) cable on the pole at the lowest point of our allocated space.

2.0 Reference Documents

DSEM 06.201	Overhead General
DSEM 06.231	Clearances
DSEM 06.241	Conductor Attachment
DSEM Section 06	Overhead Design
DSEM Section 09	Arrester
DTR 04.045	Joint Pole Space Allocation Guide
DTR 04.047	Attachment Points for Secondary and Neutral Cable
DTR 04.111	Minimum Vertical Clearance for Joint Pole Lines
DTR 04.225	Minimum Vertical Clearance Between Conductors on the Same Pole
DTR 06.035	Conductor Storm-Loaded Tensions
DTR 10.045	35 kV MGY and Below, Single-Phase Double Dead-end and Tap
DTR 10.061	35 kV MGY and Below Single-Phase Taps
DTR 32.143	Slack Spans Sag & Tension Primary Conductor – Spacer Cable & Aerial Cable
DTR 32.183	Slack Spans Sag & Tension – 1/0 ACSR Neutral-Messenger – 1/0 Secondary Cable
DTR Section 10	Distribution Pole Tops
DTR Section 16	Arresters & Grounds
DTR Section 18	Cutout and Solid Blade Disconnects
DTR Section 32	Conductors

3.0 Secondary/Neutral/ADSS Attachment Height

3.1 The secondary or neutral attachment point is determined by the amount of pole space we have purchased on each pole. The amount of space allocated to Eversource Energy is determined by the pole height, if the pole is jointly owned with the telephone company or if Eversource has purchased additional height. The amount of space we have allocated is specified on **DTR 04.045**. All joint occupants in the Eversource operating territories (CT, WMA, & NH) have agreed to accept the space allocations as shown on this Standard.

3.2 We have specified the secondary/ neutral or, if applicable, ADSS cable attachment point to be two inches above the point shown on **DTR 04.045** in order to provide enough space on the pole to allow for the sag of the secondary/neutral or ADSS conductors without violating the National Electrical Safety Code.

3.2.1 Secondary/ neutral or, if applicable, ADSS cable attachment points are specified on **DTR 04.047** for various combinations of pole height requirements. These conductors should be attached at the mounting heights specified within this standard in order to maximize fully utilize our entire allocated pole space to our maximum advantage, that is, to provide as much clearance as possible for our line crews. Our pole specification has been revised to provide a predrilled hole for the secondary/neutral or ADSS cable mounting bracket. Failure to utilize this space by not attaching our secondary/neutral or ADSS conductors as low on the pole as possible generally results in the appropriation of our allocated space by the communications (telephone or cable television) companies who creep up the pole into the “neutral space” or into our allocated space. This can lead to injuries resulting from clearance violations by the communications companies.

3.3 When we purchase additional pole height, we must be sure that our secondary conductor is installed as far down on the pole as we are allowed to be, within the space allocated to our Company by the purchase of the extra height. Refer to **DTR 04.047** to determine the secondary/neutral or ADSS attachment height when our Company purchases additional height.

3.4 Example

3.4.1 Eversource requires 109 inches to build a specific pole top: A 45-foot pole is needed to provide the clearances required in our Standards, but the telephone company will only agree to joint ownership of a 40-foot pole, forcing us to purchase the additional five feet. In this case, even though we initially required only 109 inches, our attachment point should be at 136 inches. This allows us to fully utilize the space on the pole that we have purchased to provide as much clearance as possible for our line crews.

4.0 Existing Poles

4.1 Existing poles should not be replaced just to achieve the increased clearances shown in these new Standards. If existing poles are in good condition, do not require replacement for other reasons, and meet the preferred clearance requirements as specified in **DTR 04.225**, economics dictate that they should remain in service. If it is practical to do so without violating the clearance requirements shown in **DTR 04.111**, the secondary/neutral and ADSS conductors should be lowered to the attachment heights shown on **DTR 04.047** when work is performed on existing poles.

4.2 When existing poles are replaced, they shall be sized for the necessary height to achieve the increased clearances set forth in the current Standards. This may occasionally require replacement of adjacent poles to prevent excessive strain on pole hardware and to achieve proper line profile. Also, poles that are being replaced need to be correctly sized for class. Refer to **DSEM 06.201**.

5.0 Junction Poles

5.1 Most junction pole Standards show only the hardware for the tap or crossover construction. This allows a variety of junction poles to be built by selecting the main line construction from other **DTR Section 10** standards. Appropriate main line construction options are defined for each junction pole by the Structure Limit at the top of each page. The junction pole hardware mounting heights have been established to provide proper clearances from the main line construction. If the conditions exceed the Structure Limit shown for the main line, another Standard may already exist for the main line Structure Limit you desire; or perhaps it is not possible to build this junction pole combination without violating Eversource Energy's clearance standards (see **DSEM Section 06**) or the National Electrical Safety Code. Contact T&D Standards if junction pole combinations are needed that are not found in these Construction Standards.

5.2 Example

5.2.1 **DTR 10.061**, which is the Standard for a single−phase tap, specifies the Main Line Structure Limit as: C2, A3 (CROSSARM REPLACEMENT STYLE ONLY).

5.2.2 This means that either C1 or C2 construction (crossarms with the conductors installed on pin insulators) may be used for the main line. Large corners or dead ends (C3 and C4), where the conductors are further down on the pole, are not suitable for the main line construction because these styles of construction position the main line conductors too low on the pole to maintain proper clearance from the tap conductors. Also, only single−phase ridge pin construction (A3) or the crossarm replacement style of three−phase armless construction (A3), which uses the upswept brackets, can be used for this pole's main line construction; the straight armless construction bracket positions the main line conductors too low on the pole to maintain proper clearance from the tap conductors. This is also true of either single− or three−phase large corner construction (A5), three−phase armless dead−end construction (A6), and all spacer cable styles of construction. Main line single−phase dead−end construction (A6) should be built according to **DTR 10.045** to provide maximum clearance.

5.3 Crossarm

5.3.1 Generally, 8-foot crossarms are used for three−phase construction. 10-foot arms are required when cutouts are installed on all three phases. 10-foot arms are also required for other applications and are specified on the particular Construction Standard, for example, poles with recloser bypass disconnect switches. 10-foot crossarms are recommended in commercial and industrial areas where risers might be installed in the future.

5.3.2 In New Hampshire, 10-foot crossarms shall be used for all 35 kV construction.

6.0 Cutouts and Lightning Arresters

6.1 These pieces of equipment are shown on the Construction Standard, indicating where they are installed, if required. However, these items are not provided on the pageback. This allows the engineer or technician who is laying out the job the flexibility to select the properly sized items from the **Cutout Guide** (**DTR Section 18**) and the Lightning **Arrester Guide** (**DSEM Section 09** and **DTR Section 16**), without having to search through the extensive number of variations that would be required to provide all the possible combinations of these items.

7.0 Span Length Limitations

7.1 These Standards are designed to prevent 1/0 triplex secondary, or 1/0 ACSR neutral from violating the minimum separation requirements between power and communications facilities as described in **DSEM 06.231** and **DTR Section 32**. This limits our span lengths for secondary cable installations to:

7.1.1 200 feet under the conditions described in **Clearances** on **DSEM 06.231**. For aerial cable installations the span length is limited to 175 feet. If the limitations described on **DSEM 06.231** are exceeded, then adjustments must be made to the attachment points of the primary, secondary and/or the communications conductors so that these conductors do not violate the requirements of **DSEM 06.241**. Refer to **DSEM Section 06.241** to determine the necessary separation between these conductors at the pole. Clearances are calculated using the conductor condition that produces the closest approach.

7.1.2 Refer to **DTR Section 32** of the Construction Standards for the sag of various types of conductors. In addition, conductor separation at the pole should not be less than the preferred vertical separation between conductors as shown in **DTR 04.225** and shall not be less than the minimum dimension shown on this page.

8.0 Slack Spans

8.1 Slack span construction is a method to reduce conductor and cable tension and associate pole class and guying requirements. All possible steps should be taken to obtain normal necessary guying without slack span construction. However, slack span construction is an option where there is insufficient space to install guys with longer leads that would otherwise be required based on maximum storm loaded tensions. Larger pole class, e.g. H1 and H2 is a factor as well. Reduced tension on conductor and cable for slack spans will have greater sag therefore, span lengths are not to exceed 80 feet. See **DTR 32.143** and **DTR 32.183** for slack span sag and tension. See **DTR 06.035** for slack span storm loaded tension values to be used for guying purposes.

8.2 Poles preceding the slack span shall be installed as Deadends with guys based on conductor full storm loaded tensions. Also, install a guy for the corner pole based on the reduced tensions of the slack span conductors.

8.3 All primary tongue and clevis joints shall be assembled with an antistatic clip, Item #515256, to prevent radio and television interference which results when an assembly is not installed under full tension.

8.4 Automatic type splices shall not be used due to lack of adequate tension to establish a proper electrical connection.

8.5 If there is a need to extend slack spans, replace them with longer conductors.

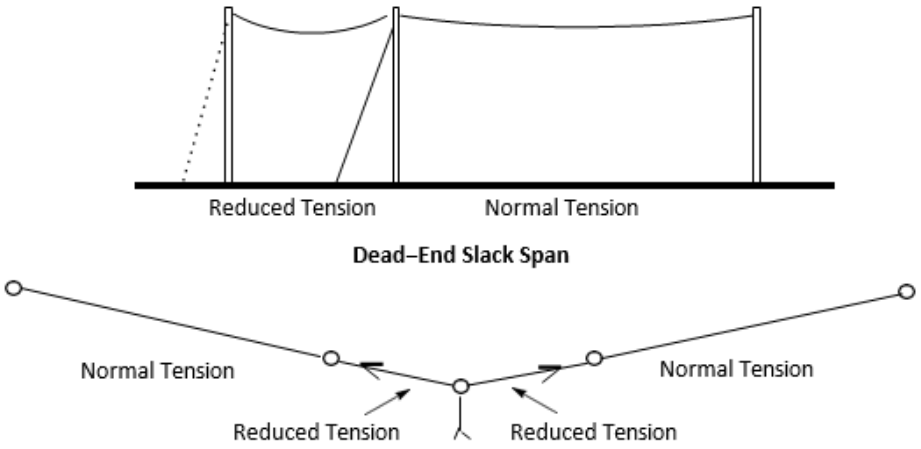

Figure 1 – Corner Pole Slack Span

9.0 Crossarm Guys

9.1 Crossarm guys should not be installed if there is any way to avoid their use. All possible steps should be taken to balance the conductor load evenly on the crossarms. When crossarm guys cannot be avoided, use 14M alumoweld cable for balancing 1/0 ACSR−477 AAC conductors.

GENERAL – The National Electrical Safety Code (NESC) specifies three grades of construction for power lines: B, C, and N. Grade C is used for most construction and our Standards are based on that grade. When greater strength is required to provide a higher safety factor, Grade B is specified. Variations are included in the Standards to raise the safety factor for Grade B construction (see below). The third Grade, N, weaker than C, is not used by Eversource Energy. In addition, storm resiliency criteria were created to provide greater strength to the distribution system. Refer to **DESM Section 02.50 Storm Resiliency Guideline** for additional details.

For the purposes of this Standard, all voltage designations are phase–to–ground for effectively grounded circuits or phase–to–phase for delta or unigrounded circuits, unless otherwise specified.

GRADE B LOCATIONS – These requirements for Grade B construction meet or exceed the requirements of the NESC (Section 24). Grade B construction is required for:

All supply cables and conductors of any voltage that cross over or overhang railroads or limited–access highways. Ramps and turning roadways in the interchanges associated with these highways are also considered part of limited access highways.

Delta supply circuits, greater than 5 kV (phase–to–phase), that cross over, or are installed on the same structure with, a communications circuit. This restriction does not apply to effectively grounded aerial cables and 27.6 kV unigrounded wye circuits. It is an Eversource requirement that conductor fastenings for 27.6 kV unigrounded wye circuit meet Grade B requirements. See **DSEM 06.222**.

Delta circuits greater than 8.7 kV (phase–to–phase), except in rights–of–way that are owned, leased or eased, and maintained by Eversource Energy. This restriction does not apply to effectively grounded aerial cables.

Primary circuits less than 8.7 kV (phase–to–phase), if installed above a circuit that is greater than 8.7 kV (phase–to–phase). This is not recommended construction. This restriction does not apply to effectively grounded aerial cables and 27.6 kV unigrounded wye circuits. It is an Eversource requirement that conductor fastenings for 27.6 kV unigrounded wye circuits meet Grade B requirements. See **DSEM 06.222**.

The transition poles between Grade C and Grade B construction must be double dead–end construction

When construction changes from Grade C to Grade B, anchor guying shall be installed to support the transition pole in the event of conductor failure in the Grade C sections. Refer to **GUYING – GENERAL REQUIREMENTS** in **DTR Section 06** for guying details.

POLE CLASS SIZE AND GUYING REQUIREMENTS – To determine the proper pole class size and guying requirements, use the **Eversource Pole and Guy Size (PAGS)** computer program, or other Company approved program. Select construction Grades B or C, as applicable. The **PAGS** program can be accessed from the Company's intranet by going to the on–line Distribution Standards Bookshelf. Select On–Line Tools/Design Calculators/ ES Pole & Guy Size (PAGS) Program. For the user guide, select ES PAGS User Manual. For background technical information about engineering principles used in the program calculations, select ES PAGS Engineering Manual.

WOOD CROSSARMS – The crossarms used by Eversource are sufficient for Grade B for C1, C2, and C3 construction. For C4 construction, the number of crossarms specified in **DTR 07.011** is sufficient for Grade C. If Grade B construction is required, the following chart shall be used:

No. of Crossarms	Maximum Tension Per Conductor
2	1100
3	2700
4	4300

FIBERGLASS CROSSARMS – Fiberglass crossarms used by Eversource are sufficient for Grade B and C construction.

CONDUCTORS – Tensions and sags, as listed in **DTR Section 32**, are acceptable for Grade B construction.

INSULATORS AND TIES – Vise–top insulators meet the requirements of Grade B construction when the conductor is in the top position.

Vise–top insulators with the conductor in the side tied position **do not** have enough holding power to meet the requirements of Grade B. When installing the conductor in the side tied position, the following shall be used:

- **Bare Aluminum Conductors** – poly–tie–top insulators and #2 bare aluminum tie wire, **Item #563990**.
- **Bare Copper Conductors** – poly–tie–top insulators and #6 bare copper tie wire, **Item #563992**.
- **Covered Conductor** – poly–tie–top insulators and #2 aluminum covered tie wire, **Item #563989**.

Do not use polyurethane ties for Grade B construction.

Spacer cable in spreaders with polyurethane ties is not considered to be Grade B construction unless the conductors are captured at each pole in the top position of a vise–top insulator or tied to insulators with wire ties.

EVERSOURCE	DISTRIBUTION SYSTEM ENGINEERING MANUAL

PoleForeman Guidelines

Doc Number:	Issued Date:	DSEM Category:	Revision:	Applicability:
06.715	18-Sep-26	Overhead Design	0	ALL

Approved by: *Signature on File* Date: 18-Sep-26
David Gladey
Vice President, Distribution Engineering

Rev No.	Description	Date
0	Original Document	September 18, 2026

Table of Contents

Section		Page
1.0	Introduction	3
2.0	Reference Documents	3
3.0	Definitions	3
4.0	Program Usage Guidelines	4
Appendix A		5

1.0 Introduction

1.1 This document provides applications details of when to use the PoleForeman line design program. PoleForeman shall be used when installing new or rebuilding overhead distribution lines and pole tops. This guideline applies to all operating companies and distribution system voltages, 35 kV and below.

2.0 Reference Documents

DTR 06.025	Guying – Determining Strength Requirements
DTR 07.011	Structure Limits
DTR 04.047	Attachment Points for Secondary and Neutral Cable

3.0 Definitions

3.1 PoleForeman is used to evaluate pole loading, structural capacity, and associated attachments for overhead distribution construction.

3.2 Calculations ensure compliance with Eversource Construction Standards and confirm that poles, equipment, and support hardware meet required strength and sag criteria under applicable loading conditions.

3.3 PoleForeman incorporates all application structural components into the calculation, including:

3.3.1 Crossarms, pole-top pins, crossarm pins

3.3.2 Post, Vice-top, and dead-end insulators & hardware

3.3.3 Messenger, conductor brackets & hardware (Spacer Construction)

3.3.4 Wood, composite & steel poles

3.3.5 All guying materials

3.3.6 Communications cables and associated 3rd party hardware where applicable

3.4 Guy lead length is a critical factor in evaluating loading on a pole; shorter lead lengths increase vertical and horizontal loading. In ideal construction, an anchor installation 2/3 the lead-to-height ratio is ideal, but field conditions do not always allow for this.

3.4.1 The relationship between lead and height is illustrated in Figure 1. This table shows the effect of lead-to-height ratio on required guy strength. Refer to **DTR 06.025** Guying – Determining Strength Requirements for additional guidance.

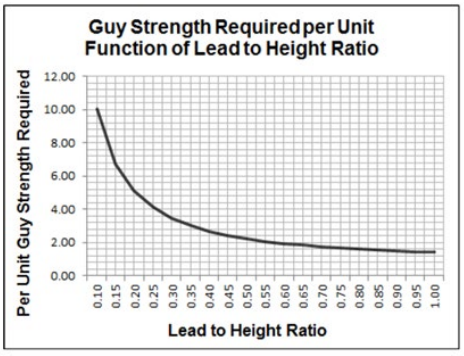

Figure 1 – Guy Strength VS Lead-to-Height Ratio

4.0 Program Usage Guidelines

4.1 Tangent & Light Angle Construction

4.1.1 For tangent and light-angle construction that complies with Eversource Construction Standards (refer **DTR 07.011**), a PoleForeman calculation is not required if span lengths are 200 feet or less and all guying and conductor-attachment requirements are satisfied. This exemption applies to crossarm, spacer cable, aerial cable, or multi-circuit construction types.

4.2 Pre-run calculations supporting these conditions are provided in Appendix A.

4.2.1 Pole loading analysis is sensitive to numerous variables. Any construction detail or field condition deviating from standard design assumptions can significantly influence calculated loading.

.1.1. All sample calculations in Appendix A were developed using less than ideal field conditions for each construction type, including maximum allowable light angles and shortened guy lead lengths. A full list of assumptions and input parameters is provided in the Appendix.

4.3 Construction Conditions requiring PoleForeman Calculations

4.3.1 A Pole Foreman calculation is required when:

.1.1. The conductor angle exceeds the standard tangent/light-angle conditions or when structural loading becomes unbalanced or compounded, including:

.1.1a. Medium & Heavy Angle (Corner poles)

.1.1b. Dead ends

.1.1c. Junction Poles

.1.1d. All structures involved in Grade B or Grade C when in highway crossings, to confirm pole loading and sag conditions under worst-case requirements.

.1.2. Installing equipment:

.1.2a. Transformer banks or single units 25 kVA and above

.1.2b. Capacitor Banks

.1.2c. Voltage Regulator

.1.2d. 3-phase Switches

.1.2e. Primary metering equipment

.1.3. Installing 3rd party antennas, battery-backup units, or other heavy communication equipment are mounted on corner poles.

.1.3a. If equipment is not available in the Pole Foreman preset library, a User-Defined entry must be created using the known physical characteristics (geometry, weight, and attachment height).

Appendix A

1.0 Parameters for Calculation

- Span Length 200 feet
- 10 foot Cross
- Grade C (Crossing)
- Guy lead ration at 1/3
- Soile Classification Average
- Max light angle based on **DTR 07.011**
- Three Communications Cables 1.5", 2.0" and 2.5
- Neutral Selection and Heights based on **DTR 04.047**
- 18M Guy Wire and 14", Single Heliz Anchor & 1" Rod
- New pole set; 100% Strength Remaining

.1.4. **Crossarm Construction**

	Crossarm Construction - Pole Loading for Tangent & Light Angle																													
	Class 2								Class 1								Class H1								Class H2							
	40		45		50		55		40		45		50		55		40		45		50		55		40		45		50		55	
	H.w	V.w	H.w	V.w	H.w	V.w	H.w	V.w	H.w	V.w	H.w	V.w	H.w	V.w	H.w	V.w	H.w	V.w	H.w	V.w	H.w	V.w	H.w	V.w	H.w	V.w	H.w	V.w	H.w	V.w
1/0 ACSR 175 MIL	44%	51%	40%	34%	43%	49%	43%	78%	38%	49%	34%	26%	36%	37%	36%	53%	32%	38%	29%	21%	31%	29%	30%	45%	28%	30%	24%	16%	26%	22%	26%	36%
336 AAC 175 MIL	46%	55%	45%	63%	45%	68%	44%	70%	38%	42%	38%	48%	37%	51%	36%	53%	32%	32%	32%	37%	32%	35%	30%	40%	28%	25%	27%	28%	27%	27%	26%	32%
477 AAC 150 MIL	46%	57%	45%	64%	46%	69%	45%	69%	38%	43%	38%	49%	37%	52%	37%	53%	32%	33%	32%	38%	32%	41%	31%	40%	28%	26%	27%	29%	27%	29%	27%	31%
556 AAC 175 MIL	47%	60%	46%	69%	46%	75%	45%	79%	38%	45%	38%	52%	38%	56%	37%	58%	33%	35%	33%	40%	33%	41%	31%	45%	28%	27%	27%	31%	27%	31%	27%	36%
795 AAC 160 MIL	53%	62%	53%	73%	53%	77%	51%	80%	44%	46%	44%	55%	43%	57%	42%	60%	37%	36%	38%	43%	33%	43%	35%	46%	32%	28%	32%	33%	31%	34%	31%	36%

.1.5. **Spacer Construction**

	Spacer Cable Construcition - Pole Loading for Tangent & Ligth Angle																													
	Class 2								Class 1								Class H1								Class H2					
	40		45		50		55		40		45		50		55		40		45		50		55		40		45		50		55	
	H.v	V.v	H.v	V.v	H.v	V.v	H.v	V.v	H.v	V.v	H.v	V.v	H.v	V.v	H.v	V.v	H.v	V.v	H.v	V.v	H.v	V.v	H.v	V.v	H.v	V.v	H.v	V.v	H.v	V.v
1/0 AAC 35kV 052 AWA Mess	47%	47%	47%	53%	47%	58%	46%	60%	38%	31%	39%	35%	38%	37%	38%	39%	33%	24%	33%	27%	33%	29%	32%	29%	28%	18%	28%	24%	28%	22%	27%	23%
336 AAC 35kV 052 AWA Mess	49%	45%	48%	51%	49%	56%	48%	65%	40%	34%	40%	39%	40%	42%	39%	43%	34%	26%	34%	30%	34%	32%	33%	33%	29%	20%	28%	23%	29%	30%	29%	32%
477 AAC 35kV 052 AWA Mess	49%	47%	49%	54%	50%	71%	49%	75%	41%	35%	41%	41%	41%	44%	40%	46%	35%	27%	35%	32%	35%	34%	33%	35%	30%	21%	29%	24%	29%	26%	29%	28%
556 AAC 25kV 052 AWA Mess	50%	56%	49%	65%	49%	72%	49%	81%	41%	42%	41%	49%	40%	44%	40%	46%	34%	27%	35%	32%	35%	34%	33%	35%	29%	21%	29%	24%	29%	32%	29%	28%
795 AAC 35kV 19#8 AW Mess	45%	43%	50%	65%	50%	74%	52%	94%	43%	42%	42%	53%	41%	55%	43%	70%	35%	28%	36%	33%	35%	43%	36%	53%	27%	20%	28%	25%	29%	33%	31%	42%

2.0 Aerial Cable Construction

	Aerial Cable Construction - Pole Loading for Tangent & Ligth Angle																													
	Class 2								Class 1								Class H1								Class H2					
	40		45		50		55		40		45		50		55		40		45		50		55		40		45		50		55	
	H%	V%	H%	V%	H%	V%	H%	V%	H%	V%	H%	V%	H%	V%	H%	V%	H%	V%	H%	V%	H%	V%	H%	V%	H%	V%	H%	V%	H%	V%	H%	V%
350 Al 25kV	61%	90%	60%	82%	60%	88%	58%	89%	51%	55%	50%	62%	49%	66%	48%	67%	43%	42%	43%	48%	42%	52%	40%	51%	37%	33%	36%	37%	36%	40%	35%	41%
500 Al 35kV	63%	74%	61%	84%	62%	90%	59%	91%	52%	56%	52%	64%	50%	68%	49%	68%	44%	43%	44%	49%	43%	53%	41%	52%	38%	34%	37%	38%	36%	41%	36%	42%
750 Al 25kV	64%	76%	62%	85%	62%	92%	60%	92%	53%	57%	52%	65%	51%	69%	50%	69%	45%	44%	44%	50%	44%	54%	41%	53%	38%	35%	37%	39%	37%	42%	36%	42%

NOTE:

1) **%H (Horizontal Loading):** This represents the Horizontal load component. In pole analysis, this usually refers to the forces applied perpendicular to the pole's vertical axis, such as wind pressure on the pole and conductors, or the horizontal tension from wire **angles and** deadends.
2) **%V (Vertical Loading):** This represents the vertical load component. This includes the downward weight of the pole itself, attached equipment (transformers, crossarms, etc) and the vertical weight of the conductors (power and communications), including additional ice loading.