Docket No. 23-08-09

ELECTRIC UTILITY LINE MAINTENANCE PLAN FILED PURSUANT TO SECTION 16-32g OF THE GENERAL STATUTES OF CONNECTICUT AND SECTION 16-32g-1 OF THE REGULATIONS OF CONNECTICUT STATE AGENCIES

2025 FILING

EVERSOURCE ENERGY

JANUARY 15, 2025

THE EVERSOURCE ENERGY
ELECTRIC UTILITY LINE MAINTENANCE PLAN – 2025

This is the 2025 submission of The Eversource Energy updated Electric Utility Line Maintenance Plan ("Plan"). The Plan has been prepared in accordance with section 16-32g of the General Statutes of Connecticut, section 16-32g-1 of the Regulations of Connecticut State Agencies, and the minimum requirements established by the Public Utilities Regulatory Authority ("Authority"), formerly known as the Department of Public Utility Control ("Department"), by letter dated July 13, 1989.

A) Electric System Description

The Authority's requirements call for a description of the transmission and distribution system, including the miles of plant for both underground and overhead lines, miles of plant by voltage level and miles of plant by type of construction. In accordance with that requirement, Eversource has prepared a table that contains this information, which is attached as Appendix 1. In addition, the following definitions were used in preparing Appendix 1 and other pertinent parts of this Plan:

Covered - Wire - A conductor with an abrasion-resistant outer covering, usually nonmetallic, and intended for use on overhead lines passing near trees.

Non - Covered Wire - Bare wire or any other wire not intended to withstand abrasion to tree contract.

Aerial Cable - A conductor system in which each conductor is covered with a fully insulated covering.

Spacer Cable - A type of electric supply line construction consisting of an assembly of one or more covered conductors, separated from each other and supported from a messenger by insulating spacers.

Underground Cable - Insulated conductors installed in duct or conduit systems.

Direct Buried Cable - Insulated conductors installed in direct contact with earth or in conduit. Primarily used in residential developments and industrial or commercial parks.

- **As directed by the Authority the Plan includes a map of the Eversource service territory, which indicates the location of major electric utility facilities including transmission lines and substations. The map, entitled ISO New England Public Map, is included as part of Appendix 2.** (This map may not have been updated to include the Company's recently energized new transmission facilities.)

- **Also, as directed, the number of electric distribution customers served by Eversource by customer class as of September 30, 2024, is as follows:**

Response: The number of customers served by customer class as of September 30, 2024, is:

Residential:	1,177,212
Commercial:	108,692
Industrial:	2826
Public Street Lighting:	5064
Railroad:	2
Sales for Resale:	30
TOTAL	1,293,826

Note: This number is lower than that used in interruption reporting statistics because financial accounting counts each account as a customer. Interruption analysis requires that each metered location be considered a customer. Some accounts are a summation of several meter locations.

B) Tree Trimming

- **Recent Changes in Vegetation Management Practices Implemented in the Past Two Years**

Post storm cooperation with hard hit towns to address storm damage trees and branches was initiated after Tropical Storm Henri. The effort continues to be employed following impactful storms.

The Enhanced Tree Trimming (ETT) specification was adjusted to be ten feet to the side for branch and tree clearance in 2023 and will continue in 2025.

The Scheduled Maintenance specification for side clearance on backbones was adjusted to allow for ten feet clearance in 2023. Lateral segments will be assessed and prioritized based on potential customer impacts, past tree-related reliability and tree condition. The change is reflected in the attached specification in Appendix 3..

- **Description of Line Clearance Organization and Work Force**

Heading into 2025, the Eversource Vegetation Management Program is currently managed by a manager, two Supervisors, twelve Arborists and one billing clerk. Additionally, there are twelve Vendor-Arborists added to assist with tree contractor oversight in the field, and three vendor clerks to assist with processing the tree contractor and municipal police invoices and property owner notification. A diagram of the organization is attached in Appendix 3.

All maintenance, capital, emergency, and storm restoration line clearance work will be performed by line clearance contractors.

- **Standards and Specifications for Conductor Clearances and Trimming Frequency**

Eversource schedules maintenance on a 4-year cycle by circuit. Circuits planned for scheduled maintenance are inspected by the Vegetation Management team and trimming is prioritized for greatest reliability impact. A copy of the Eversource Specification for Local Distribution Line Clearance Tree Work and Brush Control is attached in Appendix 3. The specification is an updated version that captures the change in maintenance specification.

- **Service Areas not trimmed within the Normal Trimming Cycle or to the Current Specifications.**

In 2025 all tree work including standard maintenance trimming (“SMT”), backbone maintenance enhanced trimming (“METT-BB”), lateral maintenance enhanced trimming (“METT-LAT”) and lateral enhanced trimming (“ETT”), will be completed in conformance with the specifications shown in Appendix 3, except for locations where denials or modifications to the specifications were made by property owners, per C.G.S 16-234 Section c. (6).

Through November of 2024, 3,844 miles of roadside maintenance and 31 roadside miles of Enhanced Tree Trimming have been completed.

A total of 4,321 roadside distribution miles falls under 2025 scheduled maintenance. Eversource’s Vegetation Management team inspects and assesses trees along each circuit and

performs tree work to maximize reliability for the greatest number of customers. Customer Focused Enhanced Tree Trimming will be performed on approximately 25 additional miles, which includes removing all branches above and below the conductors that are within ten feet, all trees within ten feet and inspecting and removing hazard and higher risk trees in the fall zone.

The Enhanced Tree Removal (ETR) program will include evaluation of risk trees in the fall zone, prioritizing hazard and higher risk trees along the backbones and high customer count laterals that are scheduled for maintenance. Trees failing from outside the clearance zone remain the largest cause of outages and impact to reliability.

Additionally poor performing devices on circuits not scheduled for maintenance will be inspected to address hazard and high-risk tree removals. An emphasis will be placed on scheduling risk and hazard tree removal on the top worst performing circuit segments across the state. Selection and prioritization of the targeted areas is based on vegetation related outages and may be identified and added throughout the year due to emerging reliability issues.

- **Information on Tree Trimming Refusals and impact on reliability.**

Eversource will submit all objections (refusals) by 01/31/2025 in accord with the requirements of PURA Docket No. 14-07-18. Objections, modifications and locations where documented notification or consent could not be obtained represents a relatively small number of miles when compared to the total number of miles maintained annually and on the system as a whole. However, in certain locations they can have a significant impact to reliability for both SAIFI & SAIDI. Through November 2024, Eversource has received 1,143 refusals, 5,299 modifications to specification and 551 properties that could not be notified.

- **Required information in annual vegetation management plan.**
  In attached Appendix 3, the following information is provided:

    1. Work scope and budget details.
    2. Tree and brush work specification
    3. Line clearance organization.
    4. Property owner notification and consent procedures
    5. The planned maintenance within each town within the EDC's service territory.

Since the PURA has noted that data "should be filed for a full calendar year", the company intends to file the following additional information no later than January 31, 2025, to meet the requirements of the final decision in PURA Docket No. 14-07-18:

    6. Number of property owner/customer objections by town in prior year.
    7. Number of property owner/customer objections by town in prior year accepted by the Tree Warden.
    8. Number of property owner/customer requests for modifications and decisions reached.
    9. Number of trees per town assessed to be hazardous or non-hazardous.
    10. Number of property owners/customers who give affirmative consent versus non-responses.
    11. Number of mediations conducted and outcome of mediation.

12. Number of objections appealed to PURA by either the EDC or landowner and outcome.
13. Number of removals of non-hazardous trees.
14. Number of RTRP trees planted by the EDC, reasons for planting, costs.
15. Did property owner maintain the newly planted tree?
16. Number of stumps ground by EDC, reasons for stump grinding, cost.

- **Transmission Vegetation Management Program**

The transmission vegetation management program manages trees and other vegetation that may potentially interfere with the operation of the transmission facilities, including substations, structures, and conductors. The Company's intends that transmission corridors are maintained as sustainable, diverse habitat, with grass, shrubs and low-growing trees that can safely coexist with transmission lines. The Routine Maintenance program consists of the following activities:

Scheduled Line Inspections – In compliance with NERC VM Standard, FAC-003, and inspections are performed to identify any problematic vegetation conditions that require corrective action in the upcoming year. All inspections are performed by Company personnel or qualified vendors. All transmission lines are inspected at least once annually. All lines that are subject to FAC-003 requirements are inspected at least twice annually, via ground and aerial patrol.

Cyclical ROW Maintenance – This consists of vegetation control to provide a clear and accessible area for the safe operation, review and maintenance of electric facilities located on the ROW. Reliability will be preserved through the removal of all potentially interfering tree, shrub and vine species that may, through normal growth, encroach within the minimum vegetation clearance distances (MVCD) between the vegetation and the overhead electric conductors, encroach into Minimum Approach Distance (MAD) limiting safe work conditions or impede physical or visual access along the ROW within the cleared and maintained areas of the ROW and is performed on a 4-year cycle. The Company employs Integrated Vegetation Management ("IVM") methods, including the targeted application of herbicides to control tall-growing vegetation that is incompatible based on mature height and selective state-listed invasive woody shrub species within the ROW.

Side Trimming – This consists of the trimming and removal of tree branches that encroach into the ROW from the outside edges of the cleared ROW for the purpose of ensuring adequate clearance between energized conductors and vegetation located outside the maintained corridors. Side Trimming is performed on a 4-year cycle, typically in the same calendar year as ROW maintenance. Clearances are based online voltage and span length (distance from one structure to another), with the minimum clearance distance at the time of cutting being twenty-five feet.

Hazard Tree Removals – Trees along the transmission corridor, both outside and within the easement limits of the ROW are visually inspected to identify those trees that pose a higher risk of falling and causing a disturbance or outage to the transmission system. Those trees are scheduled for corrective action (topping, trimming or removal), with appropriate

notification and/or consent of property owners as required. The inspections are corrective actions are performed in conjunction with the scheduled side trimming.

Transmission Rights of Way Reliability Program for System Resiliency – The program's purpose is the removal of all incompatible species of vegetation within the easement area and fee owned limits of the right of way (ROW), to reduce the risk to the normal operations of the transmission system from trees that fail from outside the maintained ROW. Additionally, the program is to preserve reliability through the removal of all potentially interfering tree, shrub and vine species that may, through normal growth, encroach within the minimum vegetation clearance distances (MVCD) between the vegetation and the overhead electric conductors, encroach into Minimum Approach Distance (MAD) limiting safe work conditions or impede physical or visual access along the ROW. Vegetation species such as native grasses, flowers, ferns and low growing shrubs are considered desirable and shall be preserved whenever possible and encouraged to grow.

In 2016, the Company began its first ROW clearing projects, expanding cleared boundaries of the maintained ROWs. This initiative is planning to continue for all ROW corridors with completion of FAC-003 applicable line ROWs. In 2025, the Company is planning to clear approximately 2,344 acres, subject to permitting requirements.

C) Maintenance Practices

In accordance with the Authority's requirements, this section of the Plan includes a detailed description of the Company's inspection, testing, and maintenance practices for transmission and distribution lines and equipment, and any significant changes thereto over the past two years.

- **Description of Distribution Organization and Work Force**

Electric System Operations

The Electric System Operations organization has the mission to operate the Electric Transmission and Distribution systems. This includes overseeing the scheduling and switching required to both restore power when outages occur, and to safely remove assets from service for maintenance and other construction activities. Electric Systems Operations encompasses first response for outages and trouble events, system-restoration activities and control-room management, and electric system configuration control with the objective of limiting the frequency and duration of customer outages.

Electric Field Operations

The Electric Field Operations organization is responsible for the construction, maintenance and Operations of the CL&P overhead and underground transmission and distribution systems. The Electric Field Operations organization at CL&P is composed of a System Projects group, state-wide program group, and three Division Operations groups, each with responsibility for a specific geographic area.

Engineering

The Engineering organization is structured as a functionalized team with responsibility for all design, engineering and technology functions necessary to perform distribution operations. The Engineering organization includes distribution planning, substation design, protection and controls engineering, telecommunications engineering, distribution engineering, distribution standards and system resiliency. This alignment of engineering functions is designed to promote specialized skills, stream-lined decision-making, and standard distribution-system design.

Station Operations

The Station Operations organization is responsible for the maintenance, construction, and operations of the Connecticut Transmission and Distribution substations. The Substation Operations organization is composed of a 24 x 7 shift electrician response group, a statewide Construction department, and three Division Operations groups, each with responsibility for a specific geographic area.

Field Engineering and Field Communications is responsible for maintenance, troubleshooting, test and commissioning of the Connecticut Transmission and Distribution communications System Data Acquisition and Controls (SCADA), Relay Protection Schemes to include substation and electric field apparatus. The Field Engineering and Field Communications groups are organized as a statewide Field Communication team and two regional Field Engineering teams each with responsibility for a specific geographic area.

Frequency of Inspection and/or Maintenance

As an ongoing activity, Company employees routinely observe the condition of distribution plant and addresses any equipment asset conditions. This is done as they travel about the Company's service area to perform field assignments as well as going to and from work. In addition, inspection of the plant goes on as field work is being engineered and as it is physically performed per our Eversource Maintenance Plan (EMP) requirements.

Eversource also has a comprehensive inspection, testing, and maintenance program for its distribution facilities. A table of the current inspection and maintenance procedures, their frequency, and any frequency changes in the past two years is included as Appendix 4. Appendices 5-20 provide complete procedures and brief outlines of policies pertinent to line inspection and maintenance.

This program has the following among its primary objectives:

- The prevention or mitigation of service interruptions
- Extending the useful life of equipment
- Avoiding future, more costly maintenance, and repairs
- Assuring compliance with:
  - safety rules and regulations
  - Legal requirements

- contractual agreements

The Eversource Maintenance Plan ("EMP") identifies maintenance areas to be addressed by the Company required to maintain assets, reduce outages, add to the useful life of equipment, and reduce system operating costs to customers.

The following is a brief description of the highlights for major topics regarding the inspection, testing, and maintenance practices for distribution lines and equipment:

1. The following Underground Residential Developments (Formally Direct Buried equipment) is inspected at as required with a maxim of 15-year intervals:

   Company Owned direct buried facilities including:

   - Pad Mounted Transformers
   - Submersible Transformers
   - Switch Enclosures
   - Switchgear
   - Transclosures
   - Handholes (HH)
   - Risers
   - Fault Indicators
   - Primary and secondary cable

   Refer to EMP 5.11 & 6.11 in Appendix 5 for further details.

2. Capacitor Banks

   All pole top and substation capacitor banks are visually inspected once every year. Substation capacitor banks are routinely inspected monthly. This inspection is intended to determine the condition of the tanks, bushings, terminals, connections, etc. The reactive characteristic of air conditioning load requires a high availability of capacitor banks during summer load periods. An annual infrared survey of capacitor banks is also performed.

   Refer to EMP 5.05 & 6.05 in Appendix 6 for further details.

3. Inspection and Maintenance of pole top Automatic Voltage Regulating Equipment

   Pole top regulators are inspected annually and receive major maintenance as required. All three-phase voltage regulating equipment on circuit backbones receive an annual infrared inspection (Appendix 19).

   Refer to EMP 5.01 & 6.01 in Appendix 8 for further details.

4. Inspection and Maintenance of Reclosers

Line reclosers are inspected as part of the annual infrared inspections, in addition to the site visit for the battery replacement maintenance cycle. Non-SCADA controlled pole top distribution line reclosers are inspected bi-monthly. The vast majority of line reclosers now have microprocessor-based monitoring and are alarmed via the SCADA System. Being SCADA enabled allows alarms to be sent to the SOC providing alerts if issues exist. Alarms received via the SCADA system allow for condition-based inspections. Substation distribution reclosers are visually inspected monthly and the 12Y major for oil filled reclosers.

Refer to EMP 5.44 & WMS 05.12-234 in Appendix 9 for further details.

5. Inspection and Maintenance – Network Transformers

Network vaults containing network transformers are handled as follows:

A. Maintenance inspection – Energized - Annually
B. Major Maintenance - De-Energized - Every four years

Refer to EMP 5.30 & 6.30 in Appendix 12 for further details.

6. Inspection and Maintenance - Underground System - Cable

See Underground Vaults & Manholes

Refer to EMP 5.59 & WMS 81.13-234, WMS 86.03-234 in Appendix 17 for further details.

7. Inspection and Maintenance - Street lighting

Street lighting supplied from the underground system is inspected at five-year intervals.

Refer to EMP 5.48, 5.52, 6.52 in Appendix 16 for further details.

8. Infrared Inspection

The three-phase backbone portions of all circuits are surveyed annually with infrared.

Refer to EMP 5.22 Appendix 19 for further details.

9. Distribution Wood Pole Inspection and Treatment

15 years is the minimum requirement for pole inspection.

Refer to EMP 5.61 & 6.61, 6.61A, WMS 82.02-234 in Appendix 10 for further details.

10. Disconnect Switches Inspection and Maintenance

All three-phase group operated switches are visually inspected once per year.

As required, these switches are operated to check for blade alignment, contact condition, interrupting devices, insulators, arresters, etc. An annual infrared survey of three-phase switches is also performed.

Refer to EMP 5.15, WMS 59-04-234 in Appendix 7 for further details.

11. Inspection and Maintenance-Underground System - Vaults and Manholes

    Vaults and manholes are inspected at ten-year intervals.

    Refer to EMP 5.59 & 6.59A, 6.59B in Appendix 17 for further details.

- **Current Actual Annual Expenditures**

The 12-month expenditure for maintenance of overhead distribution plant for the period January 1, 2024, through November 30, 2024, was $130 million. This equates to $7,788.16 per primary circuit mile when divided by 16,692 overhead primary circuit miles.

- **Completed maintenance.**

CL&P performs maintenance of its distribution system on a continuing scheduled basis. A copy of the CL&P's Inspection and Maintenance System Report for the period January 1 through November 30, 2024, including a listing of the appropriate staffing levels necessary to complete the 2024 activities outlined in the Plan as follows:

The Connecticut Light and Power Company Inspection and Maintenance System Report									
January 1 Through November 30, 2024									
System Report						Number of scheduled and completed			
Ref. No	**I&M Program Description**	**Group Responsible**	**Procedure Number**	**Unit Description**	**Total Number of Units**	**Scheduled for 2024**	**Completed by 11/30/2024**	**% completed by 11/30/2024**	**Notes**
1	DB Facilities	Operations	EMP 5.11	Switch/Transformer	72,633	1,081	1,081	100%	1
2	Capacitor Banks	Maintenance	EMP 5.05	Capacitor Bank	1,745	1,745	1,745	100%	3
3	Automatic Voltage Regulators	Maintenance	EMP 5.01	Regulator	964	964	964	100%	3
4	Reclosers	Maintenance	EMP 5.44 - Inspections	Recloser	3,958	1,957	1,957	100%	2, 3
5	UG System Network Transformers	Maintenance	EMP 5.29, 5.30 - Routine Inspection	Transformer/Protector	888	624 (I)	624	100%	3,7
			EMP 5.29, 5.30 - Major Maintenance			264 (M)	264	100%	3, 7
6	UG Plant	Operations	EMP 5.59	UG Structure (Manholes & Vaults)	10,792	1,956	1,956	100%	4, 6
7	Street Lights	Operations	EMP 5.48	Pole	4,016	4,016	4,016	100%	
8	Infrared Inspection	Maintenance	EMP 5.22	Circuit	897	897	897	100%	

NOTES

1 - Number of units to be done in a given year may vary from the quantities called for in the Frequency Table in Appendix #4 of Eversource, d/b/a CL&P Line Maintenance Plan due to anticipated changes to the units of equipment in service at any time due to upgrades, conversions, retirements, and other adjustments.

2 - Non SCADA electronic reclosers are inspected bi-monthly. Hydraulic reclosers are inspected once per year. SCADA enabled electronic reclosers allow for condition based inspections by providing an alarm to the SOC to alert of potential issues. With regard to reclosers, the Company is transitioning from a years-based major maintenence cycle to an operational based maintenance cycle (i.e. in the future these units will be maintained based upon their number of operations, fault duty, or diagnostice tests rather than once every six years.)

3 - This work may be performed by a combination of Company and contractor crews depending on work load and available resources.

4 - These values may be adjusted at year-end 2024.

5 - The cumulative staffing levels allocated and necssary for the implementation of these inspection and maintenance programs is equivalent to 72 people working full time, including contractor resources.

6 - Total units inspected include company owned manholes and vaults only.

7 - Total Units for networks counts Transformers and Protectors as one. Major Maintenance includes Network Transformers Majors and Protector Majors as separate items.

INDEX OF APPENDICES

Appendix	No./Letter/Section	Title
1		Transmission and Distribution System Miles per Construction Type and Voltage Level
2		Transmission System Maps
3		CL&P Annual Vegetation Management Plan
	Section 1	CL&P Vegetation Management Annual Plan
	Section 2	Specification for Tree Work & Brush Control
	Section 3	CL&P Line Clearance Organization
	Section 4	CL&P Property owner notification and consent procedures.
4		Table of Inspection and Maintenance Frequencies
5	EMP 5.11 6.11 TD804	Inspection of Direct-Buried Facilities
6	EMP 5.05 EMP 6.05, TD832	Capacitor Bank Inspection
7	EMP 5.15 WMS 59-04-234	Disconnect Switch
8	EMP 5.01 EMP 6.01	Voltage Regulators
9	EMP 5.44 WMS 05.12-234	Reclosers and Sectionalizers
10	EMP 5.61 EMP 6.61A, WMS 82.02-234	Wood Poles
11	Appendix no longer used.	
12	EMP 5.30 6.30	Network Transformers
13	EMP 5.29 & 6.29 6.29A, 6.29B, 6.29C & 6.29D WMS 56.03-234 TD864	Network Protectors
14	Appendix no longer used.	
15	Appendix no longer used.	
16	EMP 5.48	Street Lighting

17	EMP 5.59	Underground Vaults and Manholes WMS 81.13-234, WMS 86.03-234
18	Appendix no longer used.	
19	EMP 5.22	Infrared Survey Program
20	Appendix no longer used.	

APPENDIX 1

TRANSMISSION AND DISTRIBUTION SYSTEM MILES PER CONSTRUCTION TYPE AND VOLTAGE LEVEL

APPENDIX 1

TRANSMISSION AND DISTRIBUTION SYSTEM MILES

PER CONSTRUCTION TYPE AND VOLTAGE CLASS

Transmission			
Construction Type	69 kV Circuit Miles	115 kV Circuit Miles	345 kV Circuit Miles
Overhead Conductor	82	1106	492
Underground Cable	2.8	93.6*	47.3

Distribution				
Construction Type	5 kV Circuit Miles	15 kV Circuit Miles	25 kV Circuit Miles	35 kV Circuit Miles
Covered Wire	399.01	4274.20	2946.03	66.48
Aerial Cable	1.81	113.29	45.75	46.79
Spacer Cable	25.88	313.51	173.94	33.97
Other Overhead	1983.17	3679.34	2448.21	140.50
Underground**	81.24	3678.98	3253.41	69.10

* This includes three cable circuits 5.8 miles long operating at 138 kV across Long Island Sound to the New York State line that is owned by CL&P. The remaining length is owned by the Long Island Power Authority.

** Includes both Direct Buried and Conventional Duct-Type Circuit Miles.

APPENDIX 2

TRANSMISSION SYSTEM MAPS

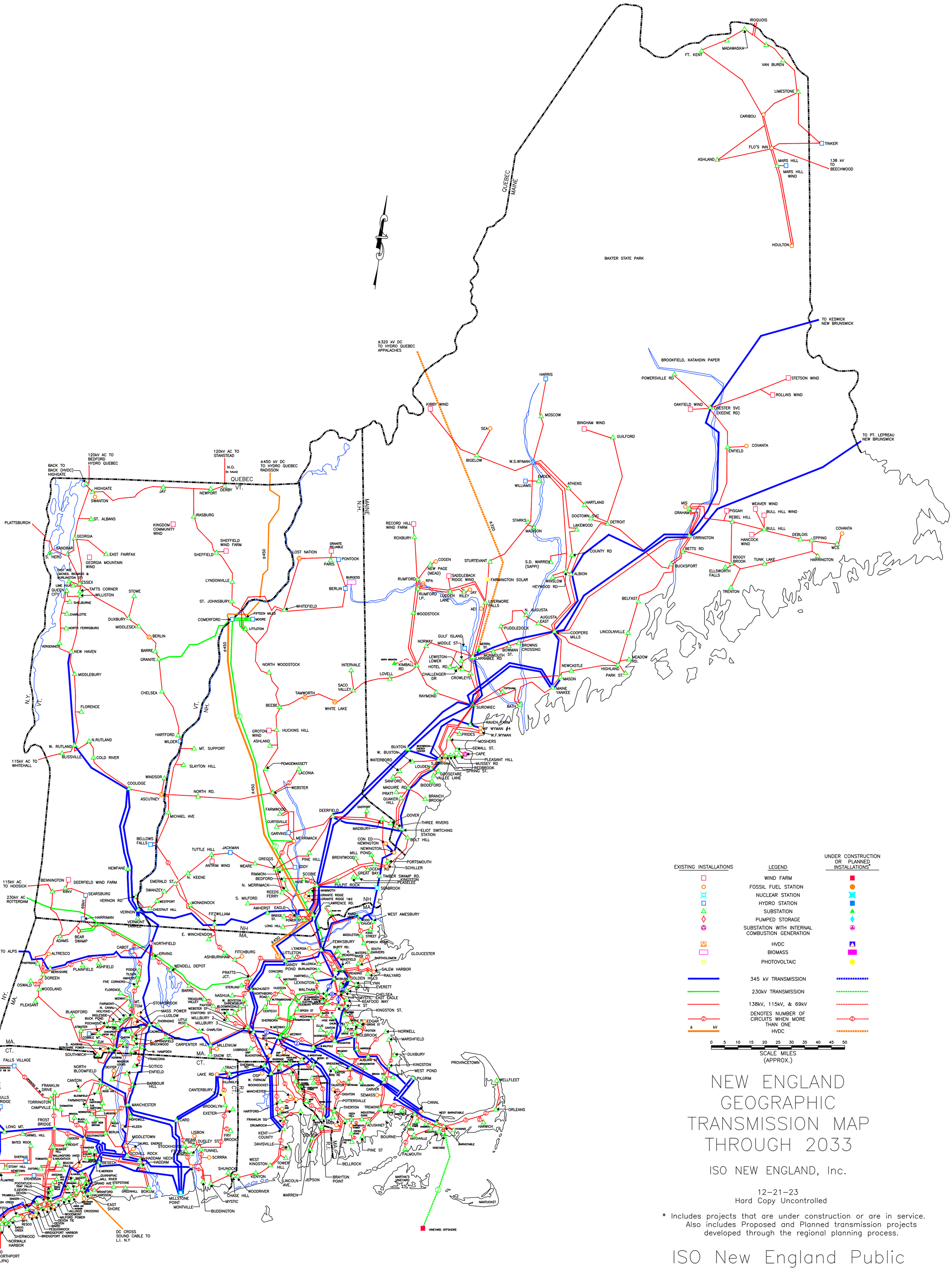

NEW ENGLAND GEOGRAPHIC TRANSMISSION MAP THROUGH 2033

ISO NEW ENGLAND, Inc.

12-21-23
Hard Copy Uncontrolled

* Includes projects that are under construction or are in service. Also includes Proposed and Planned transmission projects developed through the regional planning process.

ISO New England Public

APPENDIX 3

CL&P ANNUAL VEGETATION MANAGEMENT PLAN

Eversource Vegetation Management 2025

EXPENSE PROGRAMS	Note	Budget	Backbone Miles	Lateral Miles
Roadside Maintenance*	1	$25,661,371	1,196	3,125
Reclaim Backbone	2	$0		
ROW Brush Control* (Cir. Miles)	3	$200,000	25	
ROW Side Pruning	4	$125,000		
Vine Control	5	$175,000		
Traffic Control	6	$0		
Customer Request Work	7	$600,000		
Mid-Cycle	8	$0		
Emergency Restoration	9	$2,000,000		
Transformer Enclosure	10	$10,000		
Other	11	$328,629		
EXPENSE SUMMARY		**$29,100,000**	**1,221**	**3,125**

CAPITAL PROGRAMS		Budget	Backbone Miles	Lateral Miles
Customer Focus ETT*	12	$2,800,000		25
DOT Project	13	$1,000,000		
Tree Removals	14	$18,000,000		
Reliability Removals	15	$14,500,000		
CAPITAL SUMMARY		**$36,300,000**		**25**

	TOTAL	Budget	Backbone Miles	Lateral Miles
* Included in Cycle		**$65,400,000**	1,196	3,125
% of Total System Miles (Approx)		25.5%		
Total System Miles	16,950			

NOTES

1 Roadside Maintenance includes assessment of scheduled miles, Standard Maintenance Trimming (SMT) on prioritized laterals, Backbone M
Enhanced Tree Trimmed, Lateral Maintenance Trimming (LMETT) on laterals previously Enhanced Tree Trimmed

2 Re-establishing ETT clearance on backbones where new trees have grown in or over the wire zone (Retired)

3 Brush removal and treatment in right-of-ways (ROW). Work performed on 4-year cycle

4 Performed on ROWs scheduled for brush removal and involves the pruning of trees growing into the ROW from the side

5 Performed on backbones 2 years after they have been cleared by scheduled maintenance. Vines growing on poles or guys are cut and trea

6 Town or State mandated traffic control during scheduled work - included in unit price of maintenance

7 Inspection and completion of customer requested work and reliability issues

8 Performed on circuit backbones 2 years after maintenance (Retired)

9 Expense for tree crews during restorations not associated with major storms

10 Vegetation control performed on 2-year cycle within customer owned transformer enclosures

11 Efficiency Incentive / Other

12 Performed on zones experiencing emerging reliability issues

13 Cooperative effort with CT DOT for tree work along state roadways

14 Removal of risk & hazard trees along Roadside Maintenance

15 Focused removals on poor performing devices

Town	Maintenance on Backbone	Scheduled Maintenance Laterals	Total Mileage
ANDOVER	2.53	9.34	11.87
AVON	2.79	6.31	9.10
BARKHAMSTED	8.20	25.32	33.52
BEACON FALLS	10.48	13.99	24.48
BERLIN	4.74	7.31	12.05
BETHANY	12.23	36.84	49.07
BETHEL	0.09	0.00	0.09
BETHLEHEM	10.66	47.14	57.80
BLOOMFIELD	18.28	33.73	52.01
BOLTON	4.25	26.14	30.39
BRANFORD	16.45	27.30	43.75
BRISTOL	37.10	36.61	73.72
BROOKLYN	20.47	61.85	82.32
BURLINGTON	16.74	40.26	56.99
CANAAN	7.77	28.63	36.40
CANTERBURY	5.85	79.66	85.51
CANTON	4.92	12.29	17.21
CHAPLIN	0.11	1.80	1.91
CHESHIRE	6.00	14.73	20.73
CLINTON	4.31	11.15	15.46
COLCHESTER	1.01	5.28	6.29
COLUMBIA	3.74	9.04	12.78
CORNWALL	3.64	12.47	16.11
COVENTRY	13.33	46.86	60.19
CROMWELL	8.83	6.94	15.77
DANBURY	25.60	20.87	46.47
DARIEN	13.61	34.86	48.46
DEEP RIVER	6.84	19.45	26.29
DURHAM	1.71	1.07	2.78
EAST GRANBY	4.62	9.09	13.72
EAST HADDAM	16.59	101.29	117.88
EAST HAMPTON	7.67	9.44	17.11
EAST HARTFORD	7.58	11.93	19.51
EAST LYME	9.95	31.40	41.34
EAST WINDSOR	3.55	5.62	9.18
EASTFORD	0.00	0.97	0.97
EASTON	0.00	0.19	0.19
ELLINGTON	1.26	20.86	22.11
ENFIELD	11.11	22.36	33.47
ESSEX	4.12	20.67	24.79
FAIRFIELD	0.47	0.55	1.02
FARMINGTON	7.22	10.71	17.93
GLASTONBURY	0.03	6.68	6.71

GOSHEN	11.55	27.41	38.96
GRANBY	20.37	56.54	76.91
GREENWICH	26.10	34.30	60.40
GRISWOLD	14.49	67.17	81.66
GROTON	10.64	12.66	23.30
GUILFORD	10.54	41.46	52.00
HAMPTON	7.84	41.26	49.09
HARTFORD	5.10	9.81	14.91
HARTLAND	5.16	15.40	20.56
HEBRON	6.50	45.29	51.78
KENT	5.17	10.04	15.21
KILLINGLY	10.88	45.60	56.48
KILLINGWORTH	12.87	53.21	66.08
LEBANON	2.81	17.42	20.23
LEDYARD	9.80	24.36	34.15
LISBON	5.07	0.57	5.64
LITCHFIELD	2.33	7.99	10.32
LYME	8.67	56.31	64.98
MADISON	17.34	31.40	48.74
MANCHESTER	20.48	46.35	66.83
MANSFIELD	5.63	11.07	16.71
MARLBOROUGH	3.75	25.37	29.12
MERIDEN	10.97	30.38	41.35
MIDDLEBURY	1.85	21.11	22.95
MIDDLEFIELD	13.74	23.76	37.49
MIDDLETOWN	15.65	14.63	30.28
MONROE	25.42	41.61	67.03
MONTVILLE	13.31	30.83	44.14
MORRIS	8.08	24.10	32.18
NAUGATUCK	0.55	0.00	0.55
NEW BRITAIN	8.17	9.95	18.12
NEW CANAAN	4.24	5.09	9.33
NEW FAIRFIELD	0.00	1.67	1.67
NEW HARTFORD	9.14	25.08	34.22
NEW LONDON	6.95	4.46	11.41
NEW MILFORD	3.94	18.11	22.05
NEWINGTON	14.50	30.51	45.01
NEWTOWN	9.46	29.32	38.78
NORFOLK	2.55	31.93	34.48
NORTH CANAAN	7.67	18.94	26.61
NORTH STONINGTON	1.31	3.61	4.92
NORWALK	8.28	7.79	16.07
OLD LYME	13.40	35.29	48.69
OLD SAYBROOK	7.08	6.60	13.68
OXFORD	11.78	46.29	58.07
PLAINFIELD	5.69	22.10	27.79
PLYMOUTH	7.51	22.27	29.79

POMFRET	5.53	40.62	46.15
PORTLAND	5.91	14.95	20.86
PRESTON	5.59	7.36	12.95
PROSPECT	0.00	2.81	2.81
REDDING	1.11	2.96	4.07
RIDGEFIELD	26.32	61.69	88.01
ROCKY HILL	7.65	9.25	16.89
ROXBURY	6.82	52.73	59.55
SALEM	0.00	0.30	0.30
SALISBURY	1.98	4.60	6.58
SCOTLAND	0.81	5.04	5.85
SEYMOUR	8.98	17.66	26.64
SHARON	0.00	8.36	8.36
SHERMAN	8.93	51.62	60.55
SIMSBURY	6.30	18.77	25.07
SOMERS	0.98	0.00	0.98
SOUTH WINDSOR	8.95	5.39	14.34
SOUTHBURY	0.00	0.28	0.28
SOUTHINGTON	22.71	51.34	74.05
SPRAGUE	0.89	0.13	1.02
STAMFORD	44.82	72.96	117.78
STONINGTON	29.72	53.14	82.86
SUFFIELD	7.05	26.22	33.27
TOLLAND	12.26	44.06	56.32
TORRINGTON	5.82	15.09	20.91
VERNON	5.51	15.04	20.56
VOLUNTOWN	1.44	39.60	41.04
WALLINGFORD	0.00	0.53	0.53
WARREN	7.52	32.26	39.78
WASHINGTON	8.24	18.22	26.47
WATERBURY	45.75	64.04	109.79
WATERFORD	1.87	1.13	3.00
WATERTOWN	2.70	0.75	3.45
WEST HARTFORD	2.62	12.16	14.79
WESTBROOK	2.23	13.48	15.72
WESTON	17.41	53.65	71.07
WESTPORT	19.35	37.46	56.81
WETHERSFIELD	10.59	21.73	32.32
WILTON	27.27	68.62	95.88
WINCHESTER	0.05	0.00	0.05
WINDHAM	0.06	0.00	0.06
WINDSOR	27.77	36.66	64.43
WINDSOR LOCKS	4.98	0.24	5.22
WOLCOTT	9.12	25.51	34.63
WOODBRIDGE	0.00	1.45	1.45
WOODBURY	2.01	0.62	2.63

Total	**1196.43**	**3125.92**	**4322.35**

EVERSOURCE

SPECIFICATION FOR LOCAL DISTRIBUTION LINE CLEARANCE TREE WORK AND BRUSH CONTROL

Revision 2023

Table of Contents

Section **Page Number**

General Requirements 1
Scope of Work 2
Scheduled Maintenance Trimming 2
Enhanced Tree Trimming 4
Maintenance Enhanced Tree Trimming 5
New Business and Capital Construction 6
Tree Removal 6
Stumps 7
Brush and Vine Removal 7
Wood and Chip Disposal 8
Substation Perimeter Clearing 9
Definitions 10

2023

Sean Redding, Manager - CT Vegetation Management
Stan Bartkowiak, Supervisor - CT Vegetation Management
Kathy Ferrier, Supervisor - CT Vegetation Management
Doug Pistawka, Supervisor - CT Vegetation Management
Jenna Turner, Supervisor - CT Vegetation Management

Eversource
Specification for Local Distribution
Tree Work and Brush Control

1. General Requirements

This document describes the scope of work and technical requirements for the Eversource Distribution Line Clearance Program. All work shall be performed by qualified line clearance Contractors. Safety shall take precedence over all requirements described herein and at no time shall work be performed in an unsafe manner.

- All contact with the public and government officials shall be done in a courteous manner.

- Work shall always be subject to inspection by Eversource and government officials. The crew foreman, or the Contractor's designee, shall notify Eversource of each crew's daily work location and of any change made during the day.

- Work shall be performed in such a manner that it will not interfere with or affect in any way the operation of any existing energized lines or electrical equipment, except as specifically directed by Eversource.

- All line clearance work shall be performed in strict accordance with all applicable federal, state, and local governmental laws and regulations or approved standards and safety practices – ANSI A300 (Part 1), Best Management Practices – Utility Pruning of Trees, ANSI Z133.1, OSHA 29 CFR 1910.269. The Contractor shall be responsible for the knowledge, supervision, and enforcement of them.

- Each crew will have in the vehicle the Eversource Image Summit forms and door hangers. Administration of the process will be in accordance with all Eversource Image Summit procedures and guidelines.

- When necessary, the Contractor requests permission from tree owners and others to perform line clearance tree work around electrical conductors. When the tree owner is not at home, use the appropriate permission card and customer brochure. For all refusals, light trims, or no contacts the Contractor shall fill out a copy of the DISTRIBUTION LINE CLEARANCE MODIFICATION FORM and submit the form weekly or approved electronic form.

- The crew foreman shall complete and submit weekly company approved reporting forms, adding information daily for all T&M work. Paper forms of this report shall be submitted to Eversource no later than Tuesday of the week following the completed work week. Electronic forms shall be submitted at least weekly.

- The line clearance crew shall work progressively along the distribution system starting at the substation, or as directed by Eversource, and shall complete all work on a given

portion of the line before starting work at another location, unless otherwise approved by Eversource.

- Re-trimming will be required to correct all situations where trimming quality is determined by Eversource to be improper.

- Climbing irons shall not be used in any tree unless the tree is to be removed.

- Wherever Eversource is solely responsible for clean-up on scheduled work, clean-up shall be completed daily, and the site shall be left in at least as neat and orderly condition as it was found.

- All planned work must be set up following the Eversource CT Vegetation Management Work Planning Guide (**EXHIBIT G**).

2. Scope of Work

This Specification covers the trimming and removal of trees and brush, including the use of herbicides for brush control along overhead electrical lines and around substations owned or used by Eversource. This includes clearing for existing lines, as well as for new lines, and applies to local distribution only (along and off-roads) and not bulk supply distribution rights-of-way. Each tree must be evaluated on its own at the time it is trimmed. The tree crew must consider the variables including tree species, condition, growth rate and location.

2.1. Scheduled Maintenance Trimming (SMT)

2.1.1. Primary Conductors

Conductor clearances relative to various primary wire positions are shown in Figure 1. Remove all branches within the clearance zone bounded by the dashed line perimeter and all overhead hazards within reach of a 70-foot aerial lift.

Figure 1

CLEARANCE ZONE DIMENSIONS
For
PRIMARY VOLTAGE CONDUCTORS (2.4 to 34.5 kV)

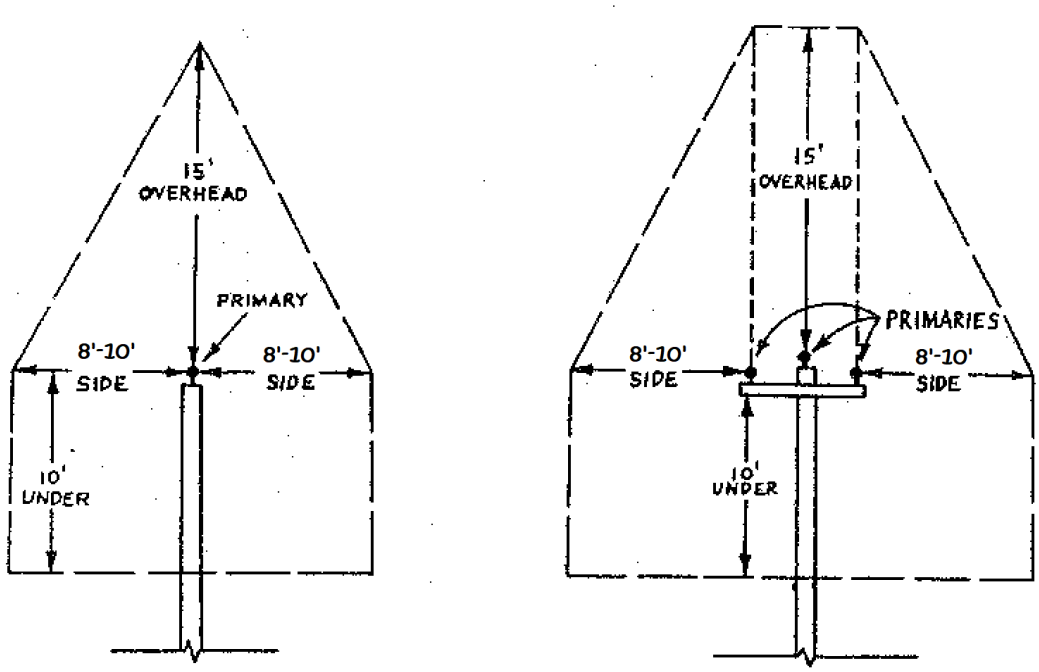

2.1.1.1. Overhead Clearances
15-feet overhead clearance shall be measured vertically upward from the highest primary.

2.1.1.2. Side Clearances
8-feet side clearance shall be measured horizontally outward from the outermost primaries, 10-feet on prioritized laterals.

2.1.1.3. Under Clearances
10-feet under clearance shall be measured vertically downward from the lowest primary.

2.1.1.4. Brush and Vine Clearances
Selectively remove only that tree brush which is presently at least 16-feet tall within the clearance zone or growing into the clearance zone. All vines which are growing up poles or guy wires shall be cut at ground level and cleared 6-feet up the pole or guy.

2.1.1.5. Water Sprouts and suckers

Water Sprouts and suckers shall not be trimmed; they shall be removed.

2.1.2. Secondaries Without Primaries Above and Service Drops

2.1.2.1. Triplex

Do not trim around them unless authorized by Eversource. When approved, trim only limbs in contact with the conductor. Trimmed branches shall provide 2-feet of clearance around conductors.

2.1.2.2. Open Wire Secondary (OWS)

Contractor shall trim all OWS conductors. Trimmed branches shall provide 2-feet of clearance around conductors.

2.2. Enhanced Tree Work (ETT)

2.2.1. Primary Conductors

Conductor clearances relative to various primary wire positions are shown in Figure 2. Remove all branches and tall growing trees within the clearance zone bounded by the dashed line.

Figure 2

Clearance Zone Dimensions for Enhanced Tree Work

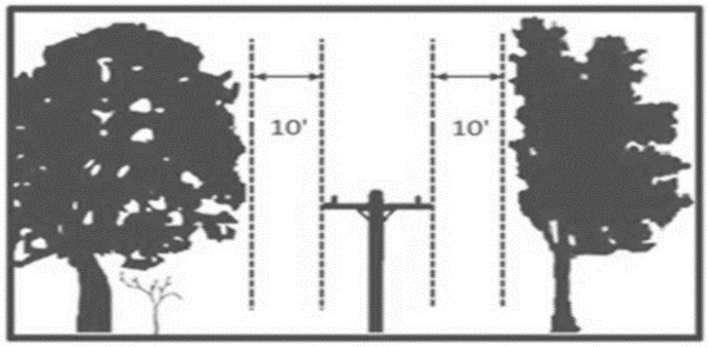

2.2.1.1. Overhead Clearances

Prune and remove all limbs in the clearance zone over the outermost primary.

2.2.1.2. Side Clearances

10-feet side clearance shall be measured horizontally outward from the outermost primaries.

2.2.1.3. Under Clearances
Prune and remove all limbs in the clearance zone under the outermost primary.

2.2.1.4. Brush and Vine Clearances
Remove all brush that is capable of growing tall enough to touch the primary conductors that are in or growing into the clearance zone. All vines which are growing up poles or guy wires shall be cut at the ground line and cleared 6-feet up the pole or guy.

2.2.1.5. Water Sprouts and Suckers
Water sprouts and suckers shall not be trimmed; they shall be removed.

2.2.2. Arboricultural Tree Management
Remove trees if foliage removal from obtaining clearance exceeds ANSI A300 pruning standard.

2.2.3. Fall Zone Hazard Tree Management
Inspect, evaluate, and eliminate all hazardous trees within the fall zone by pruning or removal. Utility compatible species may remain.

2.3. Maintenance Enhanced Tree Trimming on Backbones or Laterals (METT) and Laterals (METTL)

2.3.1. Primary Conductors on METT

2.3.1.1. Overhead Clearances
Re-clear to the previously established ETT clearances including new growth into the clearance zone. Remove all overhead hazards within reach of a 70-foot aerial lift.

2.3.1.2. Side Clearances

2.3.1.2.1. Laterals - 8-feet side clearance shall be measured horizontally outward from the outermost primaries, 10-feet on prioritized laterals.

2.3.1.2.2. Backbones - 10-feet side clearance shall be measured horizontally outward from the outermost primaries.

2.3.1.3. Under Clearances
Prune and remove all limbs in the clearance zone under the outermost primary.

2.3.1.4. Brush and Vine Clearances
Remove all brush that is capable of growing tall enough to touch the primary conductors that are in or growing into the

clearance zone. All vines which are growing up poles or guy wires shall be cut at the ground line and cleared 6-feet up the pole or guy.

2.3.1.5. Water Sprouts and suckers
Water sprouts and suckers shall not be trimmed; they shall be removed.

2.3.2. Primary Conductors on METTL (Originally Cleared Between 2004 and 2011)

2.3.2.1. Overhead Clearances
Trim to provide a minimum of 20-feet of overhead clearance and remove all overhead hazards within reach of a standard 70-foot lift unit.

2.3.2.2. Side Clearances
2.3.1.2.1. Laterals - 8-feet side clearance shall be measured horizontally outward from the outermost primaries, 10-feet on prioritized laterals.

2.3.2.3. Under Clearances
Prune and remove all limbs in the clearance zone under the outermost primary.

2.3.2.4. Brush and Vine Clearances
Remove all brush that is capable of growing tall enough to touch the primary conductors that are in or growing into the clearance zone. All vines which are growing up poles or guy wires shall be cut at the ground line and cleared 6-feet up the pole or guy.

2.3.2.5. Water Sprouts and Suckers
Water sprouts and suckers shall not be trimmed; they shall be removed.

2.4. Hazard Tree Management

Remove all hazard trees up to and including 16-inches DBH within 10-feet of the outermost conductor. The removal of any tree greater than 16-inches DBH must be approved by Eversource. Eversource will provide specific instructions in each case depending upon whether others are sharing the cost or disposing of the tree parts. Hazard Tree Management applies to 2.1 (SMT) and 2.3 (METT/METTL) specifications.

2.5. New Business and Capital Construction
Prune all branches and remove all tall growing tree species per Enhanced Tree Trimming (ETT) specification 2.2.

3. Tree Removal

- Contractor shall not "top" trees unless authorized by the Owner's Representative. Normally, these trees will be removed.

- Remove any tree which would, after trimming to clearance, exceed the ANSI A300 foliage removal standard. Trees greater than 16-inches DBH shall be removed only after authorization from Eversource.

- Specific instructions on billing of removals, depending upon whether others are sharing the cost will be provided by the Owner's Representative.

4. Stumps

All stumps shall be cut as close to the ground as possible, and in no case shall they be cut higher than 3-inches unless used as supports for a fence or approved otherwise by Eversource. All stumps shall be cut off parallel to the ground to avoid leaving sharp points on the stumps.

In Connecticut, stumps capable of resprouting (all hardwoods, pitch pine, and vines) shall be treated with an Eversource approved herbicide mixture in accordance with label directions and regulatory requirements.

5. Brush and Vine Removal

5.1. Brush

Brush shall not be trimmed or topped. The width of the brush removal area shall be 10-feet on each side of the outermost conductor or growing into that zone. Flat cutting or selective brush removal shall be approved by Eversource.

Cutting of tree brush and vines shall be done with care to minimize damage to non-interfering shrubs, such as the following that are permitted to remain:

Pinxterbloom Azalea	Hazelnut
Highbush Blueberry	Gray Dogwood
Redosier Dogwood	Huckleberry
Oldfield Common Juniper	Spicebush
Sweetfern	Mountain Laurel
Bayberry	Rhododendron

5.2. Vines

All vines that are growing up poles or guy wires shall be cut at ground level, cleared for 6-feet up the pole or guy, and treated with an Eversource approved herbicide mixture in accordance with label directions and regulatory requirements.

All vines that are growing into the clearance zone from an abutting tree or structure shall be cut at the ground level, trimmed away from primary conductors, and treated with an Eversource approved herbicide mixture in accordance with label directions and regulatory requirements.

6. Wood and Chip Disposal

The Contractor shall make every effort to minimize the amount of wood and wood chip disposal that requires hauling away from the site. This can be accomplished by; making agreements with property owners to leave logs and larger limbs at the site for use as firewood, blowing chips onto the ground in rural and unimproved natural locations with approval, and offering chips to property owners for use as mulch. All debris shall be disposed in accordance with all local laws and regulations.

The Contractor shall not leave wood debris that can be chipped overnight except on off-road sections.

6.1. Chips

Smaller limbs, branches, or cut-off brush shall be chipped, normally by chipping into a truck mounted dumping chip box. However, at unimproved natural locations, chips may be blown upon the ground provided that the depth of fresh chips shall be no greater than 3-inches. Limited brush piling may be done along the edges of off-the-road pole lines, either method being subject to the landowner's approval.

6.2. Logs

Logs from the tree trunks and larger limbs shall be cut into mutually agreed or convenient handling lengths. No logs shall be split.

6.3. Debris disposal

The tree owner shall be given first preference to utilize logs and/or chips. This agreement shall be made at the time the work is scheduled.

6.3.1. Chips

Where chips cannot be left on site, they shall be delivered to the nearest appropriate disposal space.

6.3.2. Logs

Logs shall be left at the work site in a safe location, not to pose a hazard to anyone, for a maximum of 7 days, during which time they will be available for pick up. Any logs remaining after 7 days shall be delivered to the appropriate disposal site.

7. Substation Perimeter Clearing

This section describes how tree and brush work shall be performed around substations. Prior to beginning any work around a substation, Eversource personnel will provide site specific guidelines to the Contractor. At no time shall Contractor personnel enter the fenced area of the substation without an Eversource approved escort and personal protective equipment (i.e. Fire Resistant clothing).

7.1. Brush removal

7.1.1. Non-visually sensitive or non-landscaped substations

Cut and remove all brush within 10-feet of the substation fence. If the land adjacent to the substation fence slopes toward the fence, the cleared area shall be 20-feet.

7.1.2. Visually sensitive or landscaped substations

Clear as far away from the fence as practical as directed by the Eversource representative.

7.2. Pruning

Trim back all branches to a minimum of 10-feet from the fence.

7.3. Ornamental Screens

Ornamental trees and shrubs (arborvitae, yew, etc.) that have been planted to provide a visual screen of the substation shall not be removed. If necessary, shearing shall be performed as directed by the Eversource representative.

7.4. Stump treatment

All stumps from trees and brush that have been removed and are capable of re-sprouting shall be herbicide treated with an appropriate herbicide as directed by the Eversource representative.

7.5. Cleanup

Remove and dispose of all trimmings and removal debris away from the job site unless directed otherwise by Eversource. The site shall be left in at least as neat and orderly condition as it was found.

8. Definitions

ANSI A300 (Part 1) Pruning – American National Standard for Tree Care Operations – Tree Shrub, and Other Woody Plant Maintenance – Standard Practices (Pruning).

ANSI Z133.1 – American National Standard for Arboricultural Operations – Safety Requirements.

Backbone – A section of line starting at a substation and extending to the first fused device or single/double phase reclosing device.

Brush - Tree species with a DBH of less than 6-inches, that can grow tall enough to reach conductors. Occasionally, shrub species are considered as brush, if they must be removed for line clearance or access.

Clearance - The distance between vegetation and conductor.

Contractor - The business or employees of that business, that has contracted with Eversource to perform line clearing.

Diameter Breast Height (DBH) - Diameter of a tree measured at 4.5-feet above ground level, perpendicular to the axis, on the uphill side of the tree. Where a DBH falls between two 0.1-inch increments, the measurement shall be rounded down to the last 0.1 inch. Special DBH Situations: (1) The DBH shall be measured above any stem bulge, branch whorl, or other deformity that would inflate DBH. (2) On codominant trees, the DBH shall be measured as one tree if the fork occurs above 4.5-feet and as multiple trees if the fork occurs below 4.5-feet. If the fork occurs exactly at 4.5-feet, the DBH will be measured just below the fork and beneath any swelling that would inflate DBH (USDA Forest Service; National Urban Forest Inventory and Analysis Field Guide Version 9.1, 2021).

Fall Zone - The area including the roadside clearance zone and extending from the conductors out a distance to where an uprooted tree could strike the conductor and cause an outage.

Hazard tree – Any tree or part of a tree that is (1) dead, (2) extensively decayed, or (3) structurally weak, which, if it falls, would endanger utility infrastructure, facilities, or equipment.

Lateral – A section of primary voltage line extending from the end of backbone to a secondary or service wire.

Line Clearing – Controlling vegetation to maintain proper clearance from conductors which includes tree trimming, removal, and brush and vine removal.

METT– Maintenance Enhanced Tree Trimming on Backbone or Laterals.

METTL – Maintenance Enhanced Tree Trimming on Laterals.

Modification – When the property owner requests modification to required clearances.

OSHA – Occupational Safety and Health Administration.

Overhead hazards – Dead, dying, diseased, insect infected and structurally weak branches including those which could break at weak points and strike conductors.

Refusal – When a property owner does not allow any tree work to be performed.

Risk Tree – The combination of; the likelihood of a tree-wire conflict or tree failure occurring, and the severity of the potential consequences including but not limited to injury, utility infrastructure damage or electric service disruption.

Shrub - A woody plant normally maturing less than 20-feet in height and presenting a generally bushy appearance because of its several erect, spreading, or prostrate stems.

Stump Treatment - Herbicide applications made to stumps capable of resprouting (all hardwoods and Pitch Pine) to prevent the stump from sprouting.

Substation - An electrical facility that receives electricity at high voltages and reduces the voltage so that it can be passed on to customers at a lower voltage.

Tree - A woody plant normally maturing at 20-feet or more in height, usually with a single trunk, unbranched for several feet above ground, with a definite crown.

Wires/Lines/Conductors - the overhead wires which carry the electric current at required voltages. Also to be considered for tree clearance and safety are other pole mounted equipment such as transformers, fuses, circuit breakers, etc.

Wire types –

Primary - A wire running from pole to pole operating at a voltage level exceeding 600 volts (2,400 to 34,500 volts on the Eversource overhead System), and normally located at the top of a pole.

Secondary - A wire running from pole to pole operating at a voltage level of 600 volts or less (normally 120 to 240 volts on the Eversource overhead System), and generally located approximately 4-feet below the primary.

Triplex - Two insulated wires in a twisted configuration around a bare neutral wire.

Open Wire Secondary - Three parallel wires normally in a vertical configuration separated from each other by a few inches.

Service Drop - The secondary wires connecting the point of attachment on the premises being served to the nearest pole of the distribution system.

Eversource Vegetation Management Work Planning Guide

Work Planning

General Description

This guide describes the process for Eversource and its Contractor to plan scheduled work, including providing notification and obtaining consent per Section 16-234 of the Connecticut General Statutes as amended by Public Act No. 14-151 and as ordered in the final decision issued by the Public Utilities Regulatory Authority ("PURA") on June 25, 2014 in Docket No. 12-01-10. In addition, the guide identifies the responsibilities and expectations for the Work Planner.

Contractor Representative of Eversource

The Work Planner is performing as a contractor representative of Eversource and shall at all time:

- Maintain a neat, clean and professional appearance.
- Be trained in and exhibit strong interpersonal and customer-focused communications skills.
- Be knowledgeable about all aspects of utility arboriculture including:
    - Eversource's tree work specifications; and
    - Federal, state and local laws and regulations.

Planner Expectations

The contractor shall ensure that property owners or abutting property owners understand the extent of the proposed tree work to be performed and shall make every effort to obtain full consent to prune and remove trees and brush and cut vines in compliance with state statutes, regulatory requirements, Eversource's specifications and local or state permits. Objections, refusals, modified specifications and failure to contact customers shall be considered exceptions to normal practice and will be properly documented. However, the Work Planner shall not attempt to obtain permission in a manner that is threatening, intimidating or may appear to be threatening or intimidating to a tree owner.

Planning

Municipal Communication

Prior to work planning beginning, Eversource or its representative will communicate with the Town and Tree Warden the scheduled work including location of work, work type, and specifications.

Eversource and the town will discuss opportunities to coordinate efforts for shared work, parking locations and debris disposal.

All local ordinances will be evaluated, and applicability determined.

Eversource will request the necessary permit from the town for pruning trees in the public right of way.

Property Owner Identification

Property owner information shall be obtained from municipal tax assessor's lists.

Information will be used to identify parcel information, property owners, and mailing address.

Starting and Ending Points

Typically, a starting point would be the beginning of a road or the source of the circuit (i.e. substation) and the ending point would be the end of the road or circuit. It may be appropriate to change the starting point to meet requirements of municipal officials or for reliability improvements.

Survey and Evaluation

Planned Work Survey

The contractor shall survey the entire circuit as part of the bid preparation. Based on the planned work type, each tree shall be evaluated to determine properties needing work and the specific tree work to be performed at least 10 days prior to notification and consent. The work to be proposed is as required per the specifications outlined in Eversource's *Specification for Local Distribution Line Clearance Tree Work and Brush Control* 2014-A Revision and Section II – Special Conditions and Amendments of the contract.

Compatible trees and shrubs listed in the State Vegetation Management Task Force Report under the Right Tree, Right Place section or that may be added by DEEP in the future, shall remain unless special circumstances exist that warrant pruning or removal.

Property and Tree Evaluation

At locations the contractor has determined work is required, the Work Planner will evaluate all vegetation that could affect the electrical facilities now and in the future based on the planned work type.

The Work Planner shall take into consideration individually each tree's species, condition (vigor, disease, defects, and structure), growth rate, failure characteristics and location (proximity, soil type, and slope) in determining scope of work to be performed.

Additionally, per the National Electric Safety Code (NESC), movement of vegetation during typical weather conditions plus sag of conductors due to elevated temperatures or icing must be considered when determining the extent of tree work to be performed.

The Work Planner most consider when proposing pruning the final structure, look and risk of the tree. The specific pruning required, and final form of the tree must be relayed to the property owner and consideration of removal of the tree as an option must be made if any aspect of the tree may be compromised or unfavorable.

Public Right-of-Way and Private Property

The Work Planner determines whether the tree or part of the tree that requires work is on or overhanging the Public Right-of-Way or on Private Property

Tree work that is on or overhanging the Public Right-of-Way will require notification to the abutting property owner.

Tree work that is on private property will require consent of the property owner.

Property Owner Identification

Based on the information available from tax assessor's records, the Work Planner must determine if the property owner resides at the property where the work is to be performed or not.

If the property owner resides at the property where the work is to be performed, the Work Planner will follow the steps for in- person contact. If the property owner does not reside at the property where the work is to be performed, the Work Planner will follow the steps to contact by certified mail.

Notification and Consent Procedure

Property owner resides at property of tree work:

In Person Contact

The Work Planner shall:

- Identify themselves as a contractor working as a representative of Eversource.

- Provide the property owner with informational brochure.
- Explain their purpose for being there and summarize the goals of Eversource's line clearance program (i.e. visual and physical access to electric facilities; prevention of equipment damage; provide reliable electric service).
- Explain the tree work specification (SMT, ETT, or Hazard Tree Removal) and specifically the proposed tree work for that location.
- Explain that the owner's signature of consent for work on private property and initials for verification of notification is required before any tree work can be performed and ask that they sign the completely filled-out Eversource Proposed Tree Work form.
- Record the tree owner's name and address on the Eversource Status Record form and indicate explicitly the planned work and the level of consent received or notification verified from the property owner.

Property Owner is Not Present

The Work Planner Specialist shall:

- Leave the Eversource Tree Work door hanger with the informational brochure describing the work, the contractor's contact name and phone number, and the filled out Eversource Proposed Tree Work form.
- Return to the location the next day or as soon as possible to determine if the door hanger has been acknowledged and returned to the door with Proposed Tree Work form signed for consent and initialed for notification.
- Answer any questions received from the property owner from the contact phone number provided.
- Record the status and date of the owner's consent and notification on the Eversource Status Record form, if door hanger has been returned.

Door Hanger Not Returned

The Work Planner shall:

- Leave a second door hanger and repeat steps defined above.
- Obtain the telephone number from customer service, municipal or internet records and attempt to contact owner by phone at different times of the day to obtain consent and document notification.
- If the tree owner cannot be contacted, compete the Tree Work Modification form and update the Status Record form as a "No Contact".

- Follow steps for sending a certified letter stated below.

Property owner does not reside at property of tree work.

Certified Letter

The Work Planner shall:

- Provide Eversource with information on
  - Property requiring tree work.
  - Property Owner's Name and Address
  - Proposed Tree Work Form filled out for property.
- Eversource will send the property owner via certified mail with return receipt:
  - A cover letter explaining purpose of mailing with instructions.
  - Informational brochure
  - Proposed Tree Work Form
  - Self-addressed stamped envelope to return the signed consent form if needed.
- Eversource will notify contractor of return receipts for notification and returned, completed Proposed Tree Work forms.

Modifications of Specifications

All modification to the specifications of proposed work must be documented and reported to PURA. Modifications can include:

- Trimming less then proposed (Modification)
- Denied consent of work on private property (Denial)
- Objection to proposed work in the Public Right-of-Way (Objection)
- Response to attempts to obtain consent unanswered (No Contact)
- Failure to notify (No Notification)

Private property tree work

Where the Work Planner cannot obtain full consent for pruning or removing trees and brush on private property, they shall provide Eversource with a copy of the Tree Work Modification form.

Eversource will evaluate the tree conditions, their impact on the electric system and determine the next course of action.

Eversource may:

- Contact the tree owner in person, by phone or letter to discuss options.
- File the refusal for future reference.

Public Right-of-Way tree work

Where the Work Planner receives an objection to pruning or removing trees and brushes on or overhanging the Public Right-of-Way, they shall provide Eversource with a copy of the Tree Work Modification form.

Eversource will evaluate the tree conditions, their impact on the electric system and determine the next course of action.

Eversource may:

- Contact the tree owner in person, by phone or letter to discuss options.
- Refer the objection to the municipal or state authority that has jurisdiction over trees in the public way. The Town Tree Warden or State Commissioner of the DOT then must make a decision within 10 business days.
- Based on the decision, Eversource or the abutting property owner may appeal the decision to PURA within ten business days.
    - PURA will schedule a mediation session within thirty calendar days.
    - If property owner refuses mediation, PURA will hold a hearing within sixty days of the appeal.
    - If mediation session is held and no resolution is reached, PURA will hold a hearing within thirty calendar days of the mediation session.

Objection, Mediation, or Hearing decision

Final decisions after appropriate time periods will be relayed to the contractor to proceed with work as determined in such final decisions. Status Record forms will be updated to indicate approved work.

Records Processing

Eversource Status Record

Specific information of proposed tree work at each property, status of consent and notification and all pertinent information shall be recorded on the Status Record form. The detail includes exactly how and what is to be trimmed and removed and if necessary, any modification to the specifications. The date of consent and notification will also be recorded for record.

Transfer of Information

When all the consent and notification for the circuit has been completed:

- Review the Eversource Status Record for completeness and ensure information will be clear to the tree crew.
- Provide one copy of the Eversource Status Record to EVERSOURCE and the Contractor General Foreman or the assigned tree crew.
- Provide verbal, on-site instructions to the assigned tree crew for unusual or complicated requests.

Record Keeping

Eversource and the contractor will retain copies of all completed Proposed Tree Work forms, Status Record forms and Tree Work Modification forms for twenty-four months from received date.

Eversource will keep a log of all the properties and property owner notification or consent that was attempted, the initial status received from the customer, any objections referred to the Tree Warden or DOT, their decisions, any appeals to PURA of those decisions, outcome of mediation or hearings.

Town and DOT Permits

Eversource or the contractor is required to obtain permits for planned work on town roads or state roadways.

A permit from the Town Tree Warden is required to prune trees on or overhanging the town road Public Right-of-Way.

A written permit is required from the Town Tree Warden to remove a tree in the town road Public Right-of-Way

Proceeding with Work

The contractor may begin work as planned with consent for private trees, after fifteen business days of documented notification of trees on or over the Public Right-of-Way, and when all permits have been obtained.

Documentation

The following shall be used to document the permission process:

- Proposed Tree Work form
- Status Record form
- Tree Work Modification Form
- Letters to customers
- Return Receipt cards

Eversource CT Vegetation Management Organization

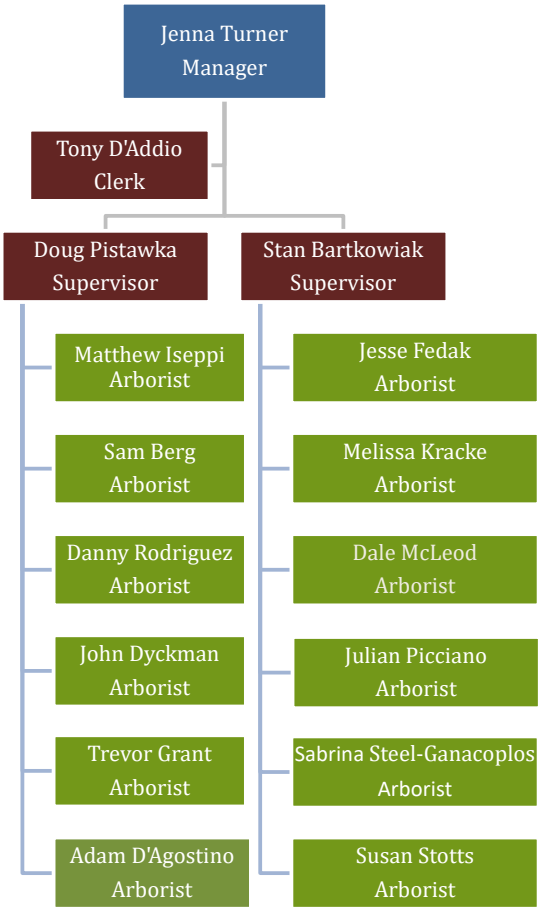

APPENDIX 4

TABLE OF INSPECTION AND MAINTENANCE FREQUENCIES

Ref. No.	Types of Equipment/Procedure	Frequency Now	Frequency Prior	Remarks
1.	Direct Buried (DB) Facilities	15	No Change	
2.	Capacitor Bank			
	Pole Top	1Year	No Change	
	Substation	Monthly		
3.	Inspect & Maintain Pole-top Voltage Regulating Equipment	1 Year	No Change	
4.	Inspect, Test, and Maintain Reclosers			
	SCADA Controlled	Annually	No Change	Being SCADA enabled allows alarms to be sent to the SOC providing alerts if issues exist. Alarms received via the SCADA system allow for condition-based maintenance.
	Non-SCADA Controlled	Bi-Monthly	No Change	
	Substation	Monthly		
				Additional equipment checks are performed following storms and line faults.
	Major Maintenance			
	Oil	12 Year	No Change	Scheduled Major Maintenance for oil filled Reclosers may be deferred, if a capital replacement project has been formally established and is being implemented on a 12-year replacement plan
5.	Network Transformers	Annually	No Change	Routine Maintenance Inspection
	Protectors	2 or 4 Years	No Change	Major Maintenance/Frequency dependant on model # of protector
6.	Underground Plant	5 Year	No Change	
7..	Streetlights – Metal Poles	15 Years	6 years	Metal streetlight poles inspections to coincide with maintenance schedule.
8.	Infrared Inspection	Annually	No Change	3-phase circuit backbone and associated pole mounted reclosers, Sectionalizers, 3-phase regulators, capacitors, and switches.
9.	Distribution Wood Pole Insp. & Treat.	15 Year	No Change	
10.	Disconnect Switches (3-Phase Group Operated Switches)	Visual – 1M Infrared – 6M Motor Control Visual 3 Year	Major Maintenance as required with 1 Year Visual on Backbone	Motor Control Visual Inspection coincides with the Battery Inspection and Replacement.

Ref. No.	Type of Equipment/Procedure	Frequency Now	Frequency Prior	Remarks
11.	Underground Transformers	10 Years	No Change	The ten-year inspection of the underground transformer, performed energized, has been changed from the previous five-year cycle to better coincide with other underground equipment maintenance.
12.	Vaults & Manholes	5 Years	No Change	This inspection should be performed coincident with equipment maintenance frequencies.

APPENDIX 5

DIRECT BURIED FACILITIES

EVERSOURCE	EVERSOURCE MAINTENANCE PROGRAM ELECTRIC OPERATIONS ORGANIZATION

Underground Residential Developments

Document Number:	Issued Date:	Revised Date:	Revision:	Applicability:
EMP 5.11	15-Jul-11	01-Aug-23	5	CT/WMA/NH

Scope:

This procedure defines the schedule, inspection, and the reporting requirements for the inspection of Underground Residential Developments (URD).

Safety:

Providing a work environment, free of recognized hazards is a value at Eversource. Therefore, prior to the start of any work, ensure that you are familiar and knowledgeable with all Eversource Safety Rules, Policies and Procedures that are applicable to the work and tasks at hand and perform a job brief at the job site, prior to commencing work. PPE requirements to protect the worker shall be followed as required in the Eversource Employee Safety Manual.

Rev No.	Description	Date
5	1. Updated Failure Findings to reflect current reporting process. 2. Updated Time-Directed for CT to 15Y. 3. Added Note 3 to Table 1. 4. Removed Time-Directed interval for Replace Fault Indicators and referenced Note 2 in Table 1. 5. Globally changed Direct Buried to Underground Residential Developments, and DB to URD. 6. Added Basis Documentation section. 7. Added reference to EMP 5.33, EMP 6.11, FIST 016, and EL-5036-V2. 8. Changed names of the Approvers on the Signature page, as required.	August 1, 2023
4	1. Added NSTAR signature requirement to the Approval list and changed names and titles as required.	June 1, 2014
3	1. Changed interval for Routine Inspection to 10 years. 2. Changed approver names on cover sheet as required.	March 31, 2014
2	1. Updated required Approvers. 2. Extended inspection interval from 5 Y to 10 Y.	December 17, 2013
1	1. Removed detail steps and added reference to NUMM Instruction 6.11. 2. Moved “Replace Fault Indicators” to Time-Directed section. 3. Added reference to DTR 04.225.	July 15, 2011

EVERSOURCE	EVERSOURCE MAINTENANCE PROGRAM ELECTRIC OPERATIONS ORGANIZATION

Underground Residential Developments

Document Number:	Issued Date:	Revised Date:	Revision:	Applicability:
EMP 5.11	15-Jul-11	01-Aug-23	5	CT/WMA/NH

Connecticut

Approved by: *Signature on File* Date: 05-Jul-23
Barry Lashley
Director, Electric Operations

Approved by: *Signature on File* Date: 03-Jul-23
Christopher Menard
Director, Electric Operations

Approved by: *Signature on File* Date: 05-Jul-23
Clifford Williams
Director, Electric Field Operations

Approved by: *Signature on File* Date: 28-Jun-23
Jeffrey Richard
Director, Distribution Engineering

Massachusetts

Approved by: *Signature on File* Date: 05-Jul-23
Umair Zia
Director, Distribution Engineering

Approved by: *Signature on File* Date: 03-Jul-23
Robert O'Loughlin
Director, Electric Operations

Approved by: *Signature on File* Date: 30-Jun-23
David Velez
Director, Electric Field Operations, West

EVERSOURCE	EVERSOURCE MAINTENANCE PROGRAM ELECTRIC OPERATIONS ORGANIZATION

Underground Residential Developments

Document Number:	Issued Date:	Revised Date:	Revision:	Applicability:
EMP 5.11	15-Jul-11	01-Aug-23	5	CT/WMA/NH

New Hampshire

Approved by: *Signature on File* Date: 28-Jun-23
Jason Yergeau
Director, Electric Operations

Approved by: *Signature on File* Date: 28-Jun-23
Russel Johnson
Director, Distribution Engineering

Tri-State

Approved by: *Signature on File* Date: 28-Jun-23
Jennifer Hebsch
Director, T&D Standards Engineering

Approved by: *Signature on File* Date: 01-Aug-23
Fatou Dieng
Director, Asset Management

Table of Contents

Section		Page
1.0	Introduction	5
2.0	Reference Documents	5
3.0	Definitions	5
4.0	Inspection and Maintenance Activity Schedules	6
5.0	Maintenance Categories	6
6.0	Failure Findings	6
7.0	Underground Residential Developments Maintenance Basis Documentation	7

1.0 Introduction

1.1 Periodic inspections of Underground Residential Developments (URD) and associated equipment at the specified interval allows preventative and corrective actions to be performed prior to situations becoming hazardous to the public or resulting in equipment failure. Inspection and failure recording ensures that corrective actions are taken by appropriate departments.

1.2 Company-owned direct-buried facilities include:

1.2.1 Pad-Mounted Transformers

1.2.2 Switch Enclosures

1.2.3 Switchgear

1.2.4 Transclosures

1.2.5 Handholes (HH)

1.2.6 Pull holes

1.2.7 Risers

1.2.8 Fault Indicators

1.2.9 Primary and Secondary Cable

1.3 This document applies URD equipment only and the equipment defined above are covered by other EMPs when not part of an URD.

2.0 Reference Documents

TD 861	Reporting Distribution Equipment Failures and Defects
TD 804	Inspection of Underground Residential Developments
EMP 5.33	Overhead Circuits
EMP 6.11	Underground Residential Developments Inspection
WMS 82.03	Excavating Around Energized Pad Mounted Equipment and Underground Residential Developments Underground Lines
DTR	Sections 42, 43 and 44
DTR 04.225	Minimum Vertical Clearance Between Conductors on the Same Pole – Based on NESC Rules 230 and 235
FIST 016	Facilities Instructions, Standards, and Techniques - Volume 4-1A (7-2020)
EL-5036-V2	Power Plant Electrical Reference Series, Volume 2: Power Transformers

3.0 Definitions

3.1 The abbreviations used for the intervals are:

3.1.1 **Y** = Year, i.e. 2Y = 2 Years

3.1.2 **A/R** = As Required

4.0 Inspection and Maintenance Activity Schedules

4.1 Inspection and/or maintenance intervals for equipment are listed in Table 1.

Table 1 – Underground Residential Developments Maintenance Intervals

Underground Residential Developments Maintenance Schedule	Interval
Time-Directed	
Routine Inspection (WMA/NH)	10Y
Routine Inspection (CT)	15Y
Replace Fault Indicators	(Note 1)
Condition-Based	
Any defects found during **Routine Inspection**	A/R (Note 2)

NOTE: 1. Replacement will occur 20 years after the manufacturer's battery life expectancy which is stamped on the Fault Indicators.

2. Repair or replace any defective components found during the Routine Inspection if possible or note repairs that cannot be completed during the Routine Inspection for future correction.

5.0 Maintenance Categories

Table 2 – Underground Residential Developments Maintenance Schedule by Type

Type	Inspection Type	Energized / De-Energized
Time-Directed	Routine Inspections	Energized
	Replacing Fault Indicators	Energized
Condition-Based	Defective Component Repairs	De-Energized

6.0 Failure Findings

6.1 Failures of devices shall be documented in the failure reporting system used by your region and appropriate for the asset class.

6.1.1 Distribution equipment failures shall be reported using EFRS. See **TD 861** for additional information.

6.1.2 Distribution asset failures shall be documented using Maximo.

6.1.3 Stations asset failures shall be documented using CASCADE.

6.2 Minor deficiencies (e.g., premature paint peeling on newer equipment, or misaligned doors on pad-mounted equipment) should also be reported to Distribution Standards.

6.3 Analysis of URD equipment failures should be performed when deemed necessary by Distribution Standards.

7.0 Underground Residential Developments Maintenance Basis Documentation

Table 3 – Underground Residential Developments Maintenance Basis Documentation

Requirement	Basis
Fault Indicator Replacement – 20Y	Manufacturer's recommendation of a 15- to 20-year battery life.
Routine Inspection – 10Y	Company history has shown that the 10Y interval has been successful in keeping the equipment reliable. • A review of data from the Equipment Failure Reporting System (EFRS) indicates a very low failure rate for pad-mounted transformers. Although EFRS data indicates a higher failure rate for DB cable, few interruptions can be eliminated by routine preventative maintenance practices. • The EFRS has shown a very low failure rate for other DB related equipment such as handholes, secondary cables, etc.
	The US Department of the Interior Bureau of Reclamation document, Facilities Instructions, Standards, and Techniques, recommends a 3-5 inspection interval for transformers.
	The EPRI Power Plant Electrical Reference Series, Volume 2, Power Transformers, states "Every transformer should be inspected at regular intervals. The length of those intervals varies from company to company, depending on prior experience, severity of service, and harshness of the environment.

EVERSOURCE MAINTENANCE PROGRAM	Document Number: **6.11** **Rev. 4** Document Name: **Direct Buried Inspection**
Owner Name:	Henry J. Matuszak
SME Name:	Howard P. Winslow
Effective Date:	July 1, 2015

Approvals:

Connecticut:
Name: Charles E. Fontenault
Title: Director – Division Operations
Date Signed: **5-12-2015**

Eastern Massachusetts:
Name: Robert P. Billet
Title: Director – Station Operations
Date Signed: **5-05-2015**

New Hampshire:
Name: Marc Geaumont
Title: Director – Customer Operations
Date Signed: **5-04-2015**

Western Massachusetts:
Name: Bliss A. Young
Title: Director – Operations
Date Signed: **5-05-2015**

Utility Services:
Name: Michael G. Waggoner
Title: Director – Engineering Services
Date Signed: **5-10-2015**

Ensure you are using the current revision by verifying it against the controlled electronic copy located on the Distribution Engineering Standards Bookshelf or the Regulated Businesses Policies and Procedures Lotus Notes Database.

This page intentionally left blank.

DIRECT - BURIED INSPECTION

NUMM 6.11 – Rev. 4

WORK REQUEST NO	MAP NO.	LOCATION
		.

ITEM NO.	Inspection Item	DETAILS
01	DETERIORATION/PROPER GRADING	Inspect the vault, extensions, concrete slab/pad, and hand-holes for deterioration and proper grading and ensure they are properly set.
02	PROPERLY SET	Check the transformer / enclosure to verify they are properly set on the concrete pad or slab.
03	CONDITION OF CASE	Inspect the condition of the case. Check it for internal and external rust, dents, etc.
05	STANDARD SIGNS AND LABELS*	Ensure standard signs, cable tags, and labels (internal and external) are in place and in good condition as specified in DTR Sections 03 and 42.
06	PRINTS / SCHEMATICS	Use the equipment prints/schematics to verify the actual field conditions, i.e., transformer size, abnormal switching conditions, etc. against prints/schematics obtained from Supervision.
07	SECURITY / VANDALISM / SAFETY	Ensure safety and security equipment (such as locks and penta-bolts) are in place and in good working condition as specified in DTR Section 03. Check for signs of vandalism.
08	TOUCH POTENTIAL TESTING: (See NUMM Section 5.62)	
09	PROTECTIVE BUMPERS	Inspect protective bumpers to ensure they are present and in good condition, as required. Replace damaged bumpers.
10	COVER / GRATE	Ensure all covers or grates are securely locked or bolted in position.
11	OIL LEAKS	Inspect equipment for signs of oil leaks.
12	VEGETATION	Inspect for vegetation for intrusion into the equipment.
13	OBSTRUCTIONS / ACCESSIBILITY	Ensure there are no obstructions (i.e., shrubs, fences, buildings, foreign material, objects, etc.) and that the area is accessible as specified in DTR Section 42.
14	CONDITION OF RISER	Inspect the general condition of the riser and ensure it is secured to a pole.
15	POLE NO. / FUSE SIZE	Ensure riser pole stencils are present and that the stenciled fuse size agrees with that on the DB map.
NOTE: IF Obstructions/vegetation prevent accomplishment of the internal inspection STOP. The following internal inspection steps need not be performed:		
16	BARRIERS (ELECTRICAL)	Ensure electrical barriers are in place and in good condition.
17	GROUNDS	Ensure that all grounds, neutral, and drain wire connections, such as primary, secondary, transformer, telephone, etc. are in place and in good condition.
18	PRIMARY / SECONDARY EQUIPMENT	Ensure that primary/secondary equipment, such as bushings, insulators, arresters, elbows, terminators, connectors, cable taps, dead-end receptacles are in good condition. Check for signs of arcing, tracking, chipping, stress, etc. for all connections.
19	INDICATORS	Inspect indicators including - temperature, oil level, fault-read, record, and reset as applicable. Test fault indicators per DTR Section 44 and ensure they are in good condition and working. Check fault indicator's date and replace older style indicators, if found. Ensure proper installation per DTR 44.222 -.223 & verify 2.5" min. spacing to ensure proper operation.
20	PIT / HANDHOLE (CABLE)	Check the cable pit / hand-hole for silt, debris, and corrosion.
21	DEFLECTOR PLATE	Ensure deflector plates are installed, as required for the specific equipment type.
22	MOUNTING HARDWARE	Check the mounting hardware to ensure it is stable and free from corrosion.
23	ELBOW ARRESTERS	Inspect elbow arresters are present and in good condition, as required.
24	SWITCH GEAR COVERS	Ensure switchgear covers are in place and are in good condition. Details for performing switchgear maintenance are provided in a separate chapter.
25	DEAD-END CAPS ON UNUSED BUSHINGS	Inspect dead-end caps on unused bushings are present and in good condition, as required.
26	INFRARED INSPECTION ON INDUSTRIAL AND COMMERCIAL EQUIPMENT: (See TD 853)	
▶	NOTE ANY CONDITIONS THAT REQUIRE FOLLOW-UP REPAIR. Obstruction/vegetation which **DOES NOT** require a tree crew and more than 1 hour to clear need not be reported for follow up repair. In addition, the severity of obstructions must be verified by supervision as a condition for a CWO to be initiated for obstructions and/or vegetation.	

NOTE: This use of this form is optional and it is intended for use as a Worker's aid – not for use as a permanent record.

6.11 – Direct Buried Inspection Worksheet

Work Request No:	AWC:	Town:

Enter notes regarding repairs that are still required in the following section:

Severity of Obstructions must be verified by Supervision and Corrective Work Orders initiated only if it would require a tree crew and/or more than 1 hour to clear..

DB Name	Structure #	Structure Type	PCB Label Present?	Repairs Required

Completed in Accordance with NUMM 6.11?	Yes ____ No ____
Inspected By:	Inspection Date:
Reviewed By:	Review Date:

Summary of Changes

Revision 1 – Effective Date: July 15, 2011
Related Feedback – Working Group Decisions, MS-0143, MS-0078, MS-0126, MS-0140

1.	Deleted Inspection Form requirements to check for: • Contamination (not required) • Internal / Overhead Equipment (covered by NUMM 5.10) • Condition of Fence (covered by NUMM 5.10) • Stray Voltage Test (replaced with Touch Potential Test) • PCB Nameplate (added to Comments section following the form) • Properly Set (combined with Deterioration/Proper Grading)
2.	Added requirement for Touch Potential Test (replacing Stray Voltage Test).
3.	Redesigned form for recording results for repairs performed or will be required.
4.	Deleted Test Item Codes from the Inspection Form.
5.	Added additional detail to inspection of indicators.
6.	Added additional detail to use of prints/schematics.

Revision 2 – Effective Date: December 5, 2011
Related Feedback – Working Group Decision

1.	Changed table headings on the portion of the inspection form used to record repairs that are still required.
2.	Added provisions for recording Work Request and Inspection performance details.
3.	Re-sequenced steps to place all external visual inspections prior to evaluation for obstructions
4.	Added guidance for determining if a Corrective Work Order (CWO) is required for obstructions and/or vegetation.
5.	Specified that the severity of obstructions must be verified by supervision as a condition for a CWO to be initiated for obstructions and/or vegetation.

Revision 3 – Effective Date: June 1, 2014
Related Feedback – Working Group Decision, MS-0270

1.	Changed Approver Names on the Signature Page as required.
2.	Note added to inspection form as follows: “NOTE: IF Obstructions/vegetation prevent accomplishment of the internal inspection STOP. The following internal inspection steps need not be performed:”

Continued…

Revision 4 – Effective: **July 1, 2015**
Related Feedback – N/A

1.	Changed names of the Owner, SME, and Approvers on the Signature page, as required.
2.	Incorporated the following global replacements: • NU Maintenance Manual replaced by Eversource Maintenance Program. • CL&P replaced by Eversource Connecticut. • WMECO replaced by Eversource Western Massachusetts. • PSNH replaced by Eversource New Hampshire. • NSTAR replaced by Eversource Eastern Massachusetts. • NUMM replaced by EMP.
3.	Incorporated the following global replacements: • NU Safety Manual replaced by Eversource Employee Safety Manual.

Northeast Utilities System **TD PROCEDURE**		**TD804 Revision 2** **Inspection of Direct-Buried Facilities**	
Issue Date: 05/02/2012	**Effective Date:** **05/02/2012**	**Owner Department**: Division Operations **Subject Matter Expert:** Brian G. Roth	**Applicability:** CL&P,PSNH, WMECO

All changes to TD procedures are controlled by TD 001
"Writing, Revising, and Publishing Transmission and Distribution Procedures."

This procedure replaces and supersedes the following procedures (in whole or in part), as described in Section 3 "Summary of Changes":

- TD 804 "Inspection of Direct Buried Facilities" dated 01/21/05

Roll Out Instructions:
Prior to initial use of this procedure, each individual using this procedure is required to attend training on this procedure delivered during Bi-Monthly Safety Meeting or similar.

Approvals:

Approval Signature: *Sherri L. Winslow*

Sherri L. Winslow
Director-Division Operations

Approval Signature: *Bliss A. Young*

Bliss A. Young
Director-Operations

Approval Signature: *David L. Bickford*

David L. Bickford
Director-Customer Operations

Procedure applicable only to NU companies for which an approval signature appears above.

TABLE OF CONTENTS

1. INTRODUCTION 3
1.1 Objective 3
1.2 Applicability 3
1.3 References 3
1.4 Discussion 4
2. INSTRUCTIONS 5
2.1 Prior to performing the Inspections CL&P / WMECO 5
2.2 Updating Facilities to be inspected. PSNH 5
2.3 Establishing the Direct- Buried Inspection Schedule 5
2.4 Coordination of the Inspection 6
2.5 Conducting the Inspection 6
2.6 Inspection Follow-through 8
3. SUMMARY OF CHANGES 9

ATTACHMENTS

Attachment 1 Definitions 10
Attachment 2 Sample Letter to Customer 11

1. INTRODUCTION

1.1 Objective

This procedure establishes a uniform approach for the visual inspection of the following:

- Company-owned direct-buried distribution facilities
- Company-owned electrical equipment installed on private property

1.2 Applicability

This Procedure is applicable to the operations of The Connecticut Light and Power Company, Western Massachusetts Electric Company and Public Service of New Hampshire. This Procedure includes, but is not necessarily limited to the following:

- Residential direct-buried developments, single or multi-phase,
- Commercial and industrial direct-buried developments,
- Residential pad mount or submersible transformers on private property.
- Commercial and industrial pad mount or ground-level transformers and/or switching stations on private property supplied by either overhead or underground distribution facilities, and all direct-buried primary risers and all hand holes.

This Procedure does NOT include the following:

- Street lights installed in a direct-buried development, or
- Customer owned and/or maintained pad mount, submersible, or ground-level transformers and/or switching stations.

1.3 References

Unless otherwise specified:

- Forms are available through Lotus Notes NU Forms Catalog or NU Forms Catalog on the NUNet. Inspection form is found in NUMM 6.11 Maintenance Instruction of Direct Buried Systems

Procedures are available in the:

- Lotus Notes Field Documentation Database
- Lotus Notes Regulated Businesses Policies & Procedures database
- Distribution Engineering Standards Bookshelf

Development References
Documents used to develop this procedure and the process it controls:

- TD 001 "Writing, Revising, and Publishing Transmission & Distribution Procedures"

Supporting References
Documents that support performance of activities directed by this procedure:

- Employee Safety and Health Handbook – "Direct Buried Lines"
- Reference to NUMM 5.11 & 6.11
- Work Practice WP-3038, "Stray Voltage Monitoring" (CL&P & WMECO)
- Work Practice WP-3011, "Underground Streetlight Inspection" (CL&P & WMECO)
- Work Practice WP-3012, "Direct Buried Inspection" (CL&P & WMECO)
- Form Inspection form part of NUMM 6.11
- Underground Distribution Standards – DTR Sections 42, 43 and 44

Supporting Programs and Databases
Programs and databases that support performance of activities directed by this procedure:

- None

1.4 Discussion

This procedure defines the business process for the inspection of Direct Buried facilities. Periodic inspections of Direct Buried and associated equipment allows preventative and corrective actions to be performed prior to situations becoming hazardous to the public or resulting in equipment failure. This procedure supplements NUMM 5.11 and 6.11 Maintenance and Instructions of Direct Buried Systems respectively.

2. INSTRUCTIONS

2.1 Prior to performing the Inspections CL&P / WMECO

2.1.1 MAPPING -- Provides current equipment information to Work Management

2.1.2 WORK MANAGEMENT -- Reviews data and updates Cascade based on the required cycle time identified in NUMM manual section 5.11.

2.2 Updating Facilities to be inspected. PSNH

Field Engineering Division Mapping

2.2.1 Provide, to Distribution Maintenance Support, the AWC, Town, Circuit and Map number of new URD or Primary maps that show direct buried facilities.

Distribution Maintenance Support

2.22 Update Cascade with new URD or Overhead map numbers that show Direct Buried facilities to be inspected. Include the date of installation with the established time duration outlined in the NUMM manual section 5.11for the trigger point for inspection cycle.

2.23 STORMS Work orders are automatically generated by Cascade.

2.3 Establishing the Direct- Buried Inspection Schedule

2.3.1 PLANNER -- Schedules work, prints job card and attaches copies of inspection maps.

NOTE

Where there is a history of vandalism or where other safety or security considerations exist, the inspection schedules presented in Table 1 may be modified to decrease the time between inspections.

NOTE

The Division offices identify the equipment to be inspected during the annual inspections by geographical locations.

2.4 Coordination of the Inspection

Department Planer -CL&P/
Resource Planner – WMECO

2.4.1 SCHEDULE the work and ISSUE the Work Request together with copies of the inspection maps.

Division Resource Planner - PSNH

2.4.2 Obtain from Cascade the URD and Overhead map numbers by AWC and Circuit that are triggered for inspection during the planned year.

2.4.3 Provide to the AWC FSL the list of required maps to be inspected during the planned year.

Manager Customer Operations - CL&P / WMECO
AWC FSL - PSNH

2.4.4 ASSIGN an appropriate number of individuals to conduct an inspection of the equipment referenced in the Work Request.

2.4.5 ISSUE the Work Request together with copies of the inspection maps to the inspectors.

2.4.6 MONITOR the progress of the inspection efforts.

2.5 Conducting the Inspection

Line Mechanics, Splicers or
Electricians

2.5.1 Prior to inspecting the facilities, REVIEW the Underground Distribution Standards, DTR Section 43 for sign and label requirements.

2.5.2 As directed by NUMM Instructions 6.11 visually INSPECT the facilities and equipment.

2.5.3 CORRECT all "Obstructions/Accessibility" (Inspection/Test Item 02) violations whenever possible.

a. CL&P / WMECO - Prior to removal of shrubs, bushes, lawn ornaments, etc, NOTIFY the Manager Customer Operations/Division Operations Manager (CL&P, WMECO) of the need to remove obstructions.

b. CL&P / WMECO - Manager Customer Operations/Division Operations Manager will NOTIFY the customer to provide them an opportunity to remove the obstructions. Refer to Attachment 2 for sample letter.

e. (PSNH) Remove all obstructions such as shrubs, bushes, lawn ornaments, etc, which prohibit performing the inspection. Inform the property owner, if available that the obstruction must be removed to perform the inspection.

f. (PSNH) Inform the FSL of all obstructions, shrubs, bushes, lawn ornaments, etc. which could impede the operation of equipment during planned or unplanned operations. (PSNH)

2.5.4 Inspect fault indicators as indicated in NUMM Instructions 6.11

NOTE

If battery is good, the light will flash. Stop flashing light by moving tool past the indicator again. Underground Distribution Standards, DTR Section 44 contains additional information regarding the proper installation and placement of fault indicators.

Indicators should be replaced when either:

a) they do not operate upon testing; or

b) every 10 years during DB inspections

2.5.5 NOTE all conditions which cannot be repaired so that corrective action work requests may be created.

Line Mechanics, Splicers or Electricians

2.5.6 After completing the visual inspection, PERFORM the following:

a. Report any critical condition to your supervisor immediately (for example: a leaking transformer) Supervision will determine corrective action .

b. Perform an Infrared inspection on three phase commercial & industrial customers in accordance with NUMM 6.11**.**

c. Return list of corrective actions with completed work request to your supervisor.

Manager Customer Operations - CL&P / WMECO
AWC FSL - PSNH

2.5.7 Forward the completed work request with any list of corrective actions, to Division Administrative group for completion and processing.

New Service CL&P / WMECO

2.5.8 Cascade automatically generates a corrective work request for any additional follow up work requirements.

Division Resource Planner – PSNH

2.5.9 Enter into Cascade items which were not corrected by the inspectors.

2.5.10 Provide to the AWC the correction items by Circuit and Map# .

AWC-FSL (PSNH)

2.5.11 Create Work Requests by circuit to track line crew time.(PSNH)

2.5.12 TAKE remedial action on all items not corrected by the inspectors.

2.5.13 Return to Division Resource Planner list of completed correction items (PSNH)

2.5.14 Close Work Requests in Storms

Division Resource Planner (PSNH)

2.5.15 Close Cascade repair orders

2.6 Inspection Follow-through

Supervisor - New Service CL&P / WMECO

2.6.1 ISSUE Work Requests to the Department Planner/ Resource Planner for any maintenance, repair, or replacement items (Inspection/Test Item 03) identified on the completed form OP4154, "NU Direct-Buried Inspection."

Supervisor - New Service or Account Executive CL&P / WMECO

PSNH AWC - FSL

2.6.2 If an energized transformer is identified as solely supplying a vacant facility, DETERMINE whether it may be deenergized and, if appropriate, ARRANGE to have it de-energized and removed.

End of Section

3. SUMMARY OF CHANGES

Changes to TD Procedures are controlled by TD 001 "Writing, Revising, and Publishing Transmission & Distribution Procedures."

Revision 1 – Effective Date 1/21/05

Procedure extensively revised as part of TD Procedure Upgrade Project initiated in June 2002, which included:

- Upgrading to new T&D procedure format
- Accommodating processes and NU organization in place at time of upgrade
- Reviewing applicable regulations and policies, and creating or revising procedures based on that review

Removed references to anode testing. Anode testing is no longer performed on equipment covered by this procedure.

Revision 1 –Editorial Changes 04/06/09

Updated cover pages adding Brian Roth as SME and Kenneth Bowes as an Approver.

Updated responsible personnel from New Service to Work Management for Step 2.3.1

Revision 2 – Effective Date 05/02/12

- Approvers updated.
- PSNH added to Applicability.
- *Section 1.3, References* and *Supporting References* updated
- *Accident Prevention Manual* replaced with *Employee Safety and Health Handbook.*
- *Section 2, Instructions* expanded to include PSNH.
- *Section 2.1.1*, table removed.
- *(former) Attachment 2, Required Inspection Materials and Tools* deleted.

Attachment 1
Definitions
(Sheet 1 of 2)

DTR – Distribution Technical Requirements

PPE – Personal Protective Equipment

Attachment 2
Sample Letter to Customer

(Sheet 1 of 1)

Dear (fill in customer's name & address)

During a routine inspection of our facilities, we have noted obstructions that could potentially prevent us from gaining access or create a potential safety hazard for our workers.

This letter is to advise you that in accordance with the Terms and Conditions for Delivery Service, that CL&P has the right to remove such obstacles. However, before we remove the obstacle(s), we would like to provide you with the opportunity to remove the obstacle(s) yourself if you so desire within 30 days.

If the obstacle(s) are still present after 30 days, CL&P will remove the obstacles. Please be advised however, that if an emergency arises within the 30 days where access to the facility is required, CL&P reserves the right to remove the obstacle(s) as necessary without prior notice.

If you choose to dig and remove the obstacle(s) yourself, please take all necessary safety precautions and contact "CALL BEFORE YOU DIG" (CBYD) at the toll-free number 1-800-922-4455 or visit their website at http://www.cbyd.com/.

Digging can be dangerous if you don't check first for underground wiring or cable. Underground wiring could be power, telephone, or cable television. Or, there could be other underground utilities such as natural gas lines, water or sewer. Again, please take all necessary safety precautions.

If you have any questions regarding this matter, please contact (Name & Title) at (XXX) XXX-XXXX.

Sincerely,

(Operations Manager)

APPENDIX 6

CAPACITOR BANK INSPECTION

Scope:

This document details the maintenance of Substation and Pole-Top Capacitors.

Safety:

Providing a work environment, free of recognized hazards is a value at Eversource. Therefore, prior to the start of any work, ensure that you are familiar and knowledgeable with all Eversource Safety Rules, Policies and Procedures that are applicable to the work and tasks at hand and perform a job brief at the job site, prior to commencing work. PPE requirements to protect the worker shall be followed as required in the Eversource Employee Safety Manual.

Connecticut

Approved by: *Signature on File* Date: 29-Jun-23
Wayne Gagnon
Director, Station Operations

Approved by: *Signature on File* Date: 29-Jun-23
Barry Lashley
Director, Electric Operations

Approved by: *Signature on File* Date: 03-Jul-23
Christopher Menard
Director, Electric Operations

Approved by: *Signature on File* Date: 29-Jun-23
Clifford Williams
Director, Electric Field Operations

Approved by: *Signature on File* Date: 30-Jun-23
Jeffrey Richard
Director, Distribution Engineering

Massachusetts

Approved by: *Signature on File* Date: 05-Jul-23
Umair Zia
Director, Distribution Engineering

Approved by: *Signature on File* Date: 05-Jul-23
Robert O'Loughlin
Director, Electric Operations

Approved by: *Signature on File* Date: 29-Jun-23
Anthony Anzalone
Director, Station Operations

Approved by: *Signature on File* Date: 06-Jul-23
Guerlemps Jean
Director, Field Engineering /Communications

Approved by: *Signature on File* Date: 10-Jul-23
Mark Baldwin
Director, Electric Field Operations, Boston

Approved by: *Signature on File* Date: 29-Jun-23
Daryle Brown
Director, Electric Field Operations, Central

Approved by: *Signature on File* Date: 06-Jul-23
Kevin Saulnier
Director, Electric Field Operations, South

Approved by: *Signature on File* Date: 29-Jun-23
David Velez
Director, Electric Field Operations, West

New Hampshire

Approved by: *Signature on File* Date: 29-Jun-23
Eric Sutton
Director, Station Operations

Approved by: *Signature on File* Date: 29-Jun-23
Russel Johnson
Director, Distribution Engineering

Tri-State

Approved by: *Signature on File* Date: 29-Jun-23
Jennifer Hebsch
Director, T&D Standards Engineering

Approved by: *Signature on File* Date: 18-Jul-23
Fatou Dieng
Director, Asset Management

Approved by: *Signature on File* Date: 03-Jul-23
Demetrios Sakellaris
Director, Substation Technical Engineering

Rev No.	Description	Date
6	1. Updated Approvers on the Signature page as required. 2. Updated Introduction section with information listed in the General section. 3. Removed General section and obsolete reference to Accident Prevention Manual. 4. Added reference to TD 861 – Reporting Distribution Equipment Failures and Defects and EMP 6.05 – Capacitors. 5. Updated Failure Findings section to reflect current reporting process and to reference TD 861 procedure for further detail. 6. Clarified IR testing to be a Time-Directed activity in Inspection and Maintenance Activity Schedules and Maintenance Categories sections.	July 18, 2023
5	1. Changed names of the Owner, SME, and Approvers on the Signature page, as required. 2. Incorporated the following global replacements: • NU Maintenance Manual replace by Eversource Maintenance Program • CL&P Replaced by Eversource Connecticut • WMECO replaced by Eversource Western Massachusetts • PSNH replaced by Eversource New Hampshire • NSTAR replaced by Eversource Eastern Massachusetts • NUMM replaced by EMP 3. Added reference to Eversource Employee Safety Manual. 4. Added requirements specific to Capacitors 69 KV and above.	July 1, 2015
4	1. Added NSTAR signature requirement to the Approval list and changed names and titles as required. 2. Removed references to TD-706, as this document does not exist.	March 31, 2014
3	1. Added scheduling requirement that the Major Inspection will replace one of the monthly Routine Checks to prevent 13 maintenance visits per year. 2. Deleted Note 2 to Table 5.05.1.1 Table 1 concerning performing the inspection twice per year at the discretion of each region.	October 17, 2013
2	1. Changed IR Inspection from Time-Directed to Condition-Based. 2. Added IR inspection requirement to Substation capacitors. 3. Added reference to NUMM Chapter 5.22 for inspection requirements and intervals.	December 5, 2011
1	1. Changed title to “Distribution Capacitors.” 2. Deleted detail steps as they are now part of Instruction 6.05. 3. Deleted requirement to perform IR inspection. 4. Changed approver names on the Signature page, as required. 5. Added requirement to perform Potential Transformer maintenance at the same time as the capacitor maintenance.	July 16, 2011
0	1. Original Document	---

1.0 Introduction 7
2.0 Reference Documents.....7
3.0 Definitions 8
4.0 Inspection and Maintenance Activity Schedules 8
5.0 Substation (S/S) Capacitor Maintenance Categories 9
6.0 Pole-Top Capacitor Maintenance Categories.....10
7.0 Capacitor – 69 kV and Above Maintenance Categories 10
8.0 Failure Findings.....10
9.0 Capacitor Maintenance Basis Documentation.....11

1.0 Introduction

1.1 Capacitor banks are used to improve the power factor on the system. Other benefits include reducing system losses and improved voltage control. Capacitors are voltage sensitive and will not tolerate an extended overvoltage condition of more than 110 percent of the nameplate rating without deterioration and eventual failure. Because of their electrical characteristics, they are susceptible to large inrush currents, discharge currents, and transient voltage peaks, each which can reduce the expected life of the individual capacitor or increase the equipment servicing requirement of the bank.

1.2 Capacitors store energy in the form of electrical charge. They are designed with internal resistors that are intended to discharge to 50 volts within 5 minutes after disconnection from the voltage source. It is important to allow this period to expire before applying grounds to a de-energized capacitor bank to prevent damage and/or hazards resulting from high discharge currents. Note that newer capacitors have discharge resistors, but older ones may not. Check the capacitor breaker with an approved audible tester.

1.3 Capacitor banks are used in substations and on poles on the system. Substation capacitor banks are made up of one or more series groups of capacitor cans, often connected in parallel. Individual capacitors are normally provided with fuses. A blown fuse may be a sign of a failed capacitor. Since this could result in poor operation of the bank and/or damage to other capacitors within the bank, any capacitor with a blown fuse should be tested. Any capacitor suspected to be damaged (i.e., bulged tank, partial shorting per test results, etc.) should be replaced prior to re-energizing the bank. Failed capacitors must be handled carefully, due to the possible presence of gasses under pressure.

1.4 Capacitor banks can be switched or not switched. Capacitor switches are devices that require periodic maintenance.

1.5 Pole-Top capacitor banks are generally protected by fused cutouts. As with substation capacitor banks, a blown fuse may indicate a failed capacitor unit.

1.6 Pole-Top capacitors require little maintenance. Inspections should be scheduled before the heavy load season (typically from November to March) to ensure the equipment is operating properly. The components to inspect include capacitor cans, cutouts, oil switches, vacuum switches, arresters, control settings, control and radio batteries, and grounding.

1.7 Capacitor fuses often blow with no visible damage or indication of failure to the capacitor. Failures of the newer all-film capacitors are particularly hard to discern since they generate considerably less gas than paper-film capacitors.

1.8 At best, field inspection of capacitors will only indicate some probability that a capacitor has not failed. Field inspections provide no assurance as to the functional condition and expected life of a capacitor.

2.0 Reference Documents

EMP 5.22 Infrared Inspection

EMP 6.05 Capacitors

TD 832 Capacitor Bank Inspection

TD 861 Reporting Distribution Equipment Failures and Defects

3.0 Definitions

3.1 The abbreviations used for the intervals are:

3.1.1 Y = Year, i.e. 2Y = 2 Years

3.1.2 M = Month

3.1.3 A/R = As Required

4.0 Inspection and Maintenance Activity Schedules

WARNING: Wait at least FIVE MINUTES after de-energizing the capacitors before beginning to service them.

Table 1 – Capacitor Maintenance Intervals

Substation Capacitor Bank Maintenance Schedule	Interval
Time-Directed	
Routine Check – Energized (Rack Mounted and Enclosed)	1M
Major Inspection – De-Energized (Enclosed only)	1Y (Note 1)
Infrared Inspection	(Note 2)
Condition-Based	
Fuse replacement (replace if failed)	A/R
Major Test - De-Energized	A/R
Major Maintenance – De-Energized	A/R
Unit replacement (physical damage or failed test)	A/R
Block openings (if signs of animal or debris entry)	A/R
Clean the unit (if contaminated)	A/R
Repair all defects as they are found during Inspection and Test.	A/R
Pole-Top Capacitor Bank Maintenance Schedule	**Interval**
Time-Directed	
Inspection	1Y
Infrared – Backbone only, while energized.	(Note 2)
Condition-Based	
Perform Test	A/R
Scheduling Requirements	
Perform capacitor inspection at same time as controller inspection.	A/R
Maintain attached Potential Transformer at time of Capacitor Inspection, if possible.	A/R

Capacitor Bank – 69 kV and Above Maintenance Schedule	Interval
Time-Directed	
Routine Check – Energized	1M
Infrared Inspection	(Note 2)
Major Inspection – De-Energized	1Y (Note 1)
Condition-Based	
Fuse replacement (replace if failed)	A/R
Major Test - De-Energized	A/R
Major Maintenance – De-Energized	A/R
Unit replacement (physical damage or failed test)	A/R
Block openings (if signs of animal or debris entry)	A/R
Clean the unit (if contaminated)	A/R
Diagnostic Testing	A/R
Repair all defects as they are found during Inspection and Test.	A/R
Conditional Monitoring	
Overvoltage Condition	C
Imbalanced Condition	C
Scheduling Requirements	
Perform Capacitor Inspection at same time as controller inspection.	A/R
Maintain attached Potential Transformer at time of Capacitor Inspection, if possible.	A/R

NOTE: 1. The Major Inspection for enclosed units is to replace one of the monthly Routine Checks, so that the unit is only maintained 12 times per year.

2. See **EMP 5.22** for all infrared inspection intervals.

5.0 Substation (S/S) Capacitor Maintenance Categories

Table 2 – Substation Maintenance Schedule by Type

Type	Inspection Type	Energized / De-Energized
Time-Directed	Routine Inspection	Energized
	Major Inspection (Metal-Enclosed Units Only)	De-Energized
	Major Test	De-Energized
	Major Maintenance (Rack-Mounted and Metal-Enclosed Units)	De-Energized
	Infrared Testing (Rack-Mounted Only)	See **EMP 5.22**
Condition-Based	Repair all defects as they are found.	

6.0 Pole-Top Capacitor Maintenance Categories

Table 3 – Pole-Top Maintenance Schedule by Type

Type	Inspection Type	Energized / De-Energized
Time-Directed	Pole-Top Inspection	See **EMP 6.05**
	Infrared Testing	See **EMP 5.22**

7.0 Capacitor – 69 kV and Above Maintenance Categories

Table 4 – 69 kV and Above Maintenance Schedule by Type

Type	Inspection Type	Energized / De-Energized
Time-Directed	Routine Inspection (Rack-Mounted and Metal-Enclosed Units)	Energized
	Major Inspection (Metal-Enclosed Units Only)	De-Energized
	Major Test (Rack-Mounted and Metal-Enclosed Units)	De-Energized
	Major Maintenance (Rack-Mounted and Metal-Enclosed Units)	De-Energized
	Infrared Testing	See **EMP 5.22**

8.0 Failure Findings

8.1 Failures of devices shall be documented in the failure reporting system used by your region and appropriate for the asset class.

8.1.1 Distribution equipment failures shall be reported using EFRS. See **TD 861** for additional information.

8.1.2 Distribution asset failures shall be documented using Maximo.

8.1.3 Stations asset failures shall be documented using CASCADE.

9.0 Capacitor Maintenance Basis Documentation

Table 5 – Capacitor Maintenance Basis Documentation

Requirement	Basis
Substation Capacitors	
Routine Check – Energized – 1M	Historically, monthly inspections performed energized have been the accepted frequency cycle for this equipment. No information, either internal or external to Eversource, has been found to suggest a change to this frequency cycle is warranted.
Major Inspection (Metal-Enclosed only) – De-energized – 1Y	Manufacturer's literature recommends periodic de-energized maintenance but does not provide a recommended frequency. Because components of a metal-enclosed bank cannot be inspected during the monthly inspection, a de-energized inspection on an annual basis is necessary.
Pole-Top Capacitor	
Inspection – 1Y (Minimum)	A yearly inspection (at a minimum) has historically been the accepted frequency cycle for this equipment, as recommended by the manufacturer. No information, either internal or external to Eversource, has been found to suggest a change to this frequency cycle is warranted. This is supported by TD 832 that indicates "One capacitor inspection is required annually in the spring. An optional inspection may be performed in the fall."
Capacitor – 69 kV and above	
Infrared Inspection – 6M (Minimum)	Thermography should be performed every 6 months with capacitors in service.

EVERSOURCE MAINTENANCE PROGRAM	Document Number: **6.05 Rev. 4** Document Name: **Capacitors**
Owner Name:	John Dipaola-Tromba
SME Name:	Howard Winslow
Effective Date:	July 1, 2017

Approvals:

Connecticut:

Name: Charles E. Fontenault *Charles E. Fontenault*
Title: Director – Electric Field Operations
Date Signed: **06-27-2017**

Name: Anthony A. Anzalone *Anthony A. Anzalone*
Title: Director – Stations Operations
Date Signed: **06-26-2017**

Massachusetts:

Name: Robert P. Billet *Robert P. Billet*
Title: Director – Station Operations
Date Signed: 06-23-2017

Name: Donald M. Boudreau *Donald M. Boudreau*
Title: Director – Electric Operations
Date Signed: 06-27-2017

New Hampshire:

Name: James C. Eilenberger *James C. Eilenberger*
Title: Director – System Engineering
Date Signed: **06-26-2017**

Name: Marc Geaumont *Marc Geaumont*
Title: Director – Field Operations
Date Signed: **06-23-2017**

Ensure you are using the current revision by verifying it against the controlled electronic copy located on the Distribution Engineering Standards Bookshelf or the Regulated Businesses Policies and Procedures Lotus Notes Database.

Capacitor Bank Maintenance

Before You Begin

Ensure that all employees are properly trained and qualified to perform this work; and all appropriate PPE and safety requirements are met, including but not limited to those defined within the following documents:

- TD 211, “When to Wear FR Clothing”
- Eversource Employee Safety Manual
- TD 832, “Capacitor Bank Inspection”
- TD 800, “Distribution System Protective Work Clearances” (Connecticut and Western Massachusetts only)
- DTR 19.133 – “Capacitor Fusing Guide”
- New Hampshire Procedure CO-1155, “Isolation of Capacitor Banks on Distribution Circuits”
- TD 703 – Temporary Protective Grounds for Personnel in Substations
- TD 855 – Grounding for Personal Protection on Overhead Lines

---

Capacitor Maintenance Instructions

Routine Check – Energized – Substation

Rack-Mounted Units

1. Check the fence enclosure, warning and caution signs, and locks for proper installation and condition (if applicable).
2. Visually check all fuses.
3. Check for oil leaks.
4. Visually check the physical condition of each capacitor.
5. Visually check for objects or animals / birds' nests on the capacitors and on the rack.
6. Visually check any associated primary connected equipment (i.e., switches, lightning arresters, reactors) for abnormalities.
7. Visually check the breaker or interrupter counter(s), if applicable.
8. Visually check the controls (i.e., voltage, current, time clock, radio and lights), if applicable, for proper operation without cycling the equipment.
9. Listen for unusual noises.
10. If applicable, visually check the condition of the control cable, if possible.
11. Record the operations counter reading and other conditions pertinent to the unit (i.e., targets, fuses).
12. Notify Supervisor & create MxO Alert or Work Order if unusual conditions found.

Metal-Enclosed Units

1. Visually check the enclosure for damage and security (i.e., proper locking, unrestricted ventilation, signs of animal entry).
2. If the breaker, switch, or interrupter is safely accessible, visually check the condition and counter for normal operation without cycling the equipment.
3. If applicable, check the condition of the control cable, if possible.
4. Visually check the controls (i.e. voltage, current, time clock, radio and lights), if applicable, for proper operation without cycling the equipment.
5. Record the operations counter reading and other conditions pertinent to the unit (i.e., targets, fuses).
6. Check for oil leaks, if possible.
7. Listen for unusual noises.
8. Notify Supervisor & create MxO Alert or Work Order if unusual conditions found.

Major Inspection – De-Energized – Substation

NOTE
Prior to beginning maintenance, ensure that all switching and notifications are performed in accordance with Company requirements.

Metal-Enclosed Units Only

1. Isolate and ground the capacitor bank using appropriate operating and safety procedures (allow 5 minutes before grounding bank after isolation).
2. Remove the capacitor bank from service in accordance with Company requirements.
3. Visually inspect the bank for the following:
   - Bulging cans
   - Oil leaks
   - Cracked housings
4. Check the ground switch and interlocking mechanism, if applicable, for damage or abnormalities.
5. If applicable, open all compartment doors and check for water leaks, oil leaks, moisture, and contamination.
6. Check for foreign material or signs of animal entry. If an opening exists that may allow entry, repair or safely block the opening before returning the bank to service.
7. If applicable, check the condition of ventilators and filters.
8. If applicable, check the fans and thermostats, if applicable, for proper operation.
9. If applicable, check all fuses.
10. If applicable, check all capacitor tanks and connections for abnormalities.
11. If applicable, clean the unit before re-energization if it is dirty.
12. If applicable, remove Worker's grounds and short circuits from the bushings, if installed.
13. If applicable, disconnect the phase jumpers between the capacitor cans, if installed.
14. Calibrate and functionally checked monitoring equipment (relays, etc) used to alarm or trip the bank under abnormal conditions.
15. Test any capacitors found to have blown fuses as follows:
    a) Review the capacitance meter manufacturer's instructions.
    b) Calibrate the capacitance meter.
    c) Connect test leads to capacitor-can bushings.
    d) Ensure good test lead connection.
    e) Measure the capacitance of each capacitor can. See Appendix 1 for acceptable test values. Fail any can that tests outside of these values.

NOTE

Acceptable capacitance readings and a satisfactory visual inspection are indications of a good capacitor can.

The capacitance meter test may not always be correct. A failed capacitor may read within the range that indicates that the capacitor is good. Because this is not a conclusive test, every precaution shall be taken when energizing a capacitor.

16. Refer to Appendix 1, Capacitor Test Benchmarks and the following to determine if the capacitor can(s) are acceptable:
17. Compare test results to the indicated values for the size and voltage of the can.
18. Refer to Appendix 1 and verify the meter reading is within the acceptable range specified by upper and lower limits.
19. If the capacitance meter reading is outside of the acceptable range specified by the upper and lower limits, identify the cans as failed.
20. Replace failed capacitor can(s) if visual inspection and / or capacitance test results indicate capacitor can failure(s). Refer to TD 832, “Capacitor Bank Inspection”.
21. Restore the capacitor bank to service in accordance with Company requirements.
22. Check the operation of the oil switches when initiating a close (to re-energize the bank).

Major Test – De-Energized – Substation

Rack-Mounted *and* Metal-Enclosed Units

1. Test the voltage, current, time and/or radio operating controls for proper operation; check and verify their settings.

NOTE

Prior to performing the remainder of this maintenance, ensure that all switching and notifications are performed in accordance with Company requirements.

2. Isolate and ground the capacitor bank using appropriate operating and safety procedures. Allow five minutes before grounding the bank after isolating it.
3. Remove the capacitor from service in accordance with Company requirements.
4. Visually inspect the bank for the following:
   - Bulging cans
   - Oil leaks
   - Cracked housings
5. Open all compartment doors and check for water leaks, oil leaks, moisture, and contamination.
6. Check for foreign material or signs of animal entry. If an opening exists that may allow entry, repair or safely block the opening before returning the bank to service.
7. Check the condition of ventilators and filters.
8. Check the fans and thermostats, if applicable, for proper operation.
9. Operationally check all associated switches and interlocking mechanisms (disconnect, ground, vacuum, etc.).
10. Wipe clean all insulators, bus supports, fuses, and bushings.
11. Check all capacitor tanks and connections to ensure that connections are tight and that there are no abnormalities.
12. Visually check and verify proper fusing of capacitors.
13. Check for blown fuses.
14. Test any capacitors found to have blown fuses as follows:
    a) Review the capacitance meter manufacturer's instructions.
    b) Calibrate the capacitance meter.
    c) Connect test leads to capacitor-can bushings.
    d) Ensure good test lead connection.
    e) Measure and record the capacitance of each capacitor can. See Appendix 1 for acceptable test values. Fail any can that tests outside of these values.

NOTE

Acceptable capacitance readings and a satisfactory visual inspection are indications of a good capacitor can.

NOTES:

- Acceptable capacitance readings and a satisfactory visual inspection are indications of a good capacitor can.
- The capacitance meter test may not always be correct. A failed capacitor may read within the range that would indicate that the capacitor is good. Because this is not a conclusive test, every precaution shall be taken when energizing a capacitor.

2. Refer to Appendix 1, Capacitor Test Benchmarks and the following to determine if the capacitor can(s) are acceptable:
   a) Compare test results to the indicated values for the size and voltage of the can.
   b) Refer to Appendix 1 and verify the meter reading is within the acceptable range specified by upper and lower limits.
   c) If the capacitance meter reading is outside of the acceptable range specified by the upper and lower limits, identify the cans as failed.
3. Replace failed capacitor can(s) if visual inspection and / or capacitance test results indicate capacitor can failure(s). Refer to TD 832, “Capacitor Bank Inspection”.

NOTE

See Appendix 2 for a matrix to be used for determining when to replace capacitors based on inspection findings and maintenance history.

Clean the unit before re-energization, if it is dirty.

Restore the capacitor bank to service in accordance with Company requirements.

Check the operation of the oil switches when initiating a close (to re-energize the bank).

Major Maintenance - De-Energized - Substation

Rack-Mounted and Metal-Enclosed Units

1. Test the voltage, current, time and/or radio operating controls for proper operation; check and verify their settings.

NOTE

Prior to performing the remainder of this maintenance, ensure that all switching and notifications are performed in accordance with Company requirements.

1. Isolate and ground the capacitor bank using appropriate operating and safety procedure (allow 5 minutes before grounding bank after isolating).

Remove the capacitor from service in accordance with Company requirements.

2. Visually inspect the bank for the following:
   - Bulging cans
   - Oil leaks
   - Cracked housings
3. Open all compartment doors and check for water leaks, oil leaks, moisture, and contamination.
4. Check for foreign material or signs of animal entry. If an opening exists that may allow entry, repair or safely block the opening before returning the bank to service.
5. Check the condition of ventilators and filters.

Check the fans and thermostats, if applicable, for proper operation.

Test the voltage, current, time and/or radio operating controls for proper operation; check and verify settings. (If the bank is de-energized, it may not be possible to functionally check the controls. Functional check of a bank should be done prior to switching it out. This will allow for repairs to the controls while the bank is out.)

Operationally check all associated switches and interlocking mechanisms (disconnect, ground, vacuum, etc.).

Wipe clean all insulators, bus supports, fuses, and bushings.

Check all capacitor tanks and connections to ensure that connections are tight and that there are no abnormalities.

Visually check and verify proper fusing of capacitors.

Check for blown fuses.

Test any capacitors found to have blown fuses as follows:

a) Review the capacitance meter manufacturer’s instructions.
b) Calibrate the capacitance meter.
c) Connect test leads to capacitor-can bushings.

d) Ensure good test lead connection.

e) Measure the capacitance of each capacitor can. See Appendix 1 for acceptable test values. Fail any can that tests outside of these values.

NOTES:

- Acceptable capacitance readings and a satisfactory visual inspection are indications of a good capacitor can.
- The capacitance meter test may not always be correct. A failed capacitor may read within the range which would indicate that the capacitor is good. Because this is not a conclusive test, every precaution shall be taken when energizing a capacitor.

Refer to Appendix 1, Capacitor Test Benchmarks and the following to determine if the capacitor can(s) are acceptable:

f) Compare test results to the indicated values for the size and voltage of the can.

g) Refer to Appendix 1 and verify the meter reading is within the acceptable range specified by upper and lower limits.

h) If the capacitance meter reading is outside of the acceptable range specified by the upper and lower limits, identify the cans as failed.

Replace failed capacitor can(s) if visual inspection and / or capacitance test results indicate capacitor can failure(s). Refer to TD 832, “Capacitor Bank Inspection”.

NOTE: See Appendix 2 for a matrix to be used for determining when to replace capacitors based on inspection findings and maintenance history.

Clean the exterior of the capacitor can, if it is dirty.

Test the breaker, interrupters, or switches as directed in their individual sections if on cycle with this work activity.

Replace any faulty equipment prior to returning the capacitor bank to service.

Restore the capacitor bank to service in accordance with Company requirements.

Check the operation of the oil switches when initiating a close (to re-energize the bank).

Pole-Top Capacitor Maintenance (Refer to TD 832)

1. Visually inspect the bank for the following:
    - Bulging cans
    - Oil leaks
    - Cracked or broken insulators, if possible
    - Loose connections, if possible
    - Blown fuses
    - Blown arresters
    - Grounds and grounding connections

Visually inspect the Pole, related equipment, and surrounding area as follows:

- Verify the Pole Number is present and correctly installed.
- Verify Tree/Vegetation growth is not encroaching on the equipment.
- Verify a continuous ground wire is present from the pole base to the capacitor bank.
- Verify a ground rod is present at the base of the pole.
- Verify a ground wire is present between the ground rod and system neutral.
- Verify that oil switches and vacuum interrupters are in good condition.
- Verify that radio-controlled switches are in good condition.

Verify that all control switches are in their normal positions.

Schedule a replacement of the capacitor can if any obvious problems are found, such as physical damage etc.

- If a fuse is blown, test the capacitor.

From capacitor control, record the voltage, KVAR, and Power Factor. (Note: this information may not be available on some controls.) Initiate a close. The recorded values should have changed because of the added capacitance.

NOTES:

- Refer to PR-153 (Appendix 3 of this document) for a description of SC 571918, Transformer and Capacitor tester.
- A satisfactory visual inspection is an indication of a good capacitor can only.
- If the capacitor is not functional and has oil switches, the bank should be replaced with new.

Continuous Monitoring

Capacitor banks 69kV and above

1. Continuous monitoring of the input voltage and voltage or current imbalance within the capacitor banks is performed via SCADA alarm monitoring when the capacitor banks are in operation.

Condition Based Maintenance

Diagnostic Testing (performed with Bank de-energized)

1. Capacitor can values are recorded.
2. Neutral voltage imbalance protection relaying (if utilized) is tested for proper operation and settings are verified.
3. Over-voltage protection relaying (if utilized) is tested for proper operation and settings are verified.

Failure Finding: (Refer to TD 832)

1. See Appendix 2 for a matrix to be used for determining when to replace capacitors based on inspection findings and maintenance history.
    - ***Replace*** the entire capacitor bank (see Appendix 2):
        - If there have been three or more can failures on the capacitor bank.
        - If there have been more than two trips to the capacitor bank for repairs other than Cans and Switches.
        - If the capacitor is not functional and has oil switches.
    - ***Repair*** the capacitor bank if none of the above conditions for replacement exist. (See Appendix 2.)

Summary of Changes

Revision 1 – Effective Date: **July 15, 2011**

Related Feedback – N/A

1.	SME changed to Warren Hadley.
2.	Completed periodic review.
3.	Added entries to the Capacitor Test Benchmarks table.
4.	Added Appendix 3, PR 153, which is description of SC 571918, Capacitor Tester.

Revision 2 – Effective Date: **March 31, 2014**

Related Feedback – MS-0213, MS-0319, MS-0313

1.	Replaced all references to TD 706 with references to TD 832.
2.	Deleted requirement to inspect for “damaged reactor coils” from the Pole-Top maintenance section.
3.	**Added:** The following actions to Pole Top Inspection: Visually inspect the Pole, related equipment, and surrounding area as follows: • Verify the Pole Number is present and correctly installed. • Verify Tree/Vegetation growth is not encroaching on the equipment. • Verify a continuous ground wire is present from the pole base to the capacitor bank. • Verify a ground rod is present at the base of the pole. • Verify a ground wire is present between the ground rod and system neutral. • Verify that oil switches and vacuum interrupters are in good condition. • Verify that radio-controlled switches are in good condition. **Deleted** The following actions to the Pole Top Inspection: • Record the operations counter reading.
4.	Changed or added Approver names to the Signature Page, as required.
5.	SME changed as required.

Revision 3 – Effective Date: **July 1, 2015**

Related Feedback – MS-0427, MS-0428, MS-0429, MS-0435, MS-0436, MS-0437, MS-0438, MS-0439, MS-0440, MS-0441

1.	Changed names of the Owner, SME, and Approvers on the Signature page, as required.
2.	Incorporated the following global replacements: • NU Maintenance Manual replace by Eversource Maintenance Program • CL&P Replaced by Eversource Connecticut • WMECO replaced by Eversource Western Massachusetts • PSNH replaced by Eversource New Hampshire • NSTAR replaced by Eversource Eastern Massachusetts • NUMM replaced by EMP
3.	Incorporated the following global replacements: NU Safety Manual replaced by Eversource Employee Safety Manual
4.	Revised step 4 of the Routine Inspection - (Rack Mounted) to read as follows: “Visually check the physical condition of each capacitor.”
5.	Revised step 7 of the Routine Inspection - (Rack Mounted) by adding "… if applicable."
6.	Revised the Routine Inspection - (Rack Mounted & Metal Enclosed) by adding a step that reads "Notify Supervisor & create MxO Alert or Work Order if unusual conditions found.
7.	Revised the Routine Inspection - (Rack Mounted & Metal Enclosed, step, 8 and 4 respectively) by adding ""… if applicable.
8.	Revised the Routine Inspection - (Rack Mounted & Metal Enclosed - steps 10 and 3 respectively) by adding "… if applicable."
9.	Revised step 3 of the Major Inspection by adding "… if applicable.
10.	Revised step 4 of the Major Inspection by adding "… if applicable."
11.	Revised steps 6 through 12 of the Major Inspection by adding "… if applicable."
12.	Inserted new step between 12 and 13 of Major Inspection to read calibrate and functionally checked monitoring equipment (relays, etc.) used to alarm or trip the bank under abnormal conditions.
13.	Added guidance for Condition Based Maintenance and continuous monitoring for Capacitors operating at 69Kv or above
14.	Revised step 13 e of Major Maintenance to read as follows: Measure and record the capacitance of each capacitor can. For distribution level capacitors, …
15.	Added guidance to Appendix 1 for 115KV capacitors

Revision 4 – Effective Date: **July 1, 2017**

Related Feedback – N/A

1.	All stock codes changed to the new Maximo number.
2.	Approvers updated

Appendix 1 – Capacitor Test Benchmarks

System Line Voltage: kV	Capacitor-Can Voltage Rating: kV	Capacitor Rating: Mircrofarads *			
		Kvar	Ideal[1]	-5%[2]	+15%[3]
4.16Y/2.4	2.40	15	6.90	6.555	7.935
		25	11.50	10.925	13.225
		50	23.0	21.850	26.450
		100	46.0	43.700	52.90
4.8Δ 8.32Y / 4.8	4.80	15	1.725	1.639	1.983
		25	2.875	2.731	3.306
		50	5.751	5.463	6.614
		100	11.50	10.925	13.225
		200	23.0	21.85	26.45
12.4Y / 7.20	7.20	50	2.556	2.428	2.939
		100	5.112	4.856	5.879
		150	7.668	7.284	8.818
		200	10.224	9.713	11.757
13.2Y / 7.62	7.62	50	2.282	2.168	2.624
		100	4.564	4.336	5.249
		200	9.128	8.671	10.498
13.8Y / 7.96	7.96	50	2.09	1.986	2.404
		100	4.18	3.971	4.807
		200	8.36	7.942	9.614
34.5 / 19.92	19.92	100	0.668	0.634	0.768
		150	1.002	0.952	1.152
		200	1.336	1.269	1.536
		300	2.003	1.903	2.304
		400	2.671	2.538	3.072
23.0Y / 13.28	13.28	100	1.503	1.428	1.728
		200	3.006	2.856	3.457
		300	4.508	4.282	5.184
27.6Y / 15.93	15.93	200	2.089	1.984	2.402
115	17	200		1.84	2.02
115	17	300		2.75	3.02
115	17	400		3.67	4.04

* Capacitor microfarads = 2.65 x (kVAR ÷ kV^2)

(1) This is an ideal capacitor test reading.

(2) Replace the capacitor can if the reading is below this value.

(3) Replace the capacitor can if the reading is above this value.

Appendix 2 – Eversource Capacitor Replacement Decision Matrix

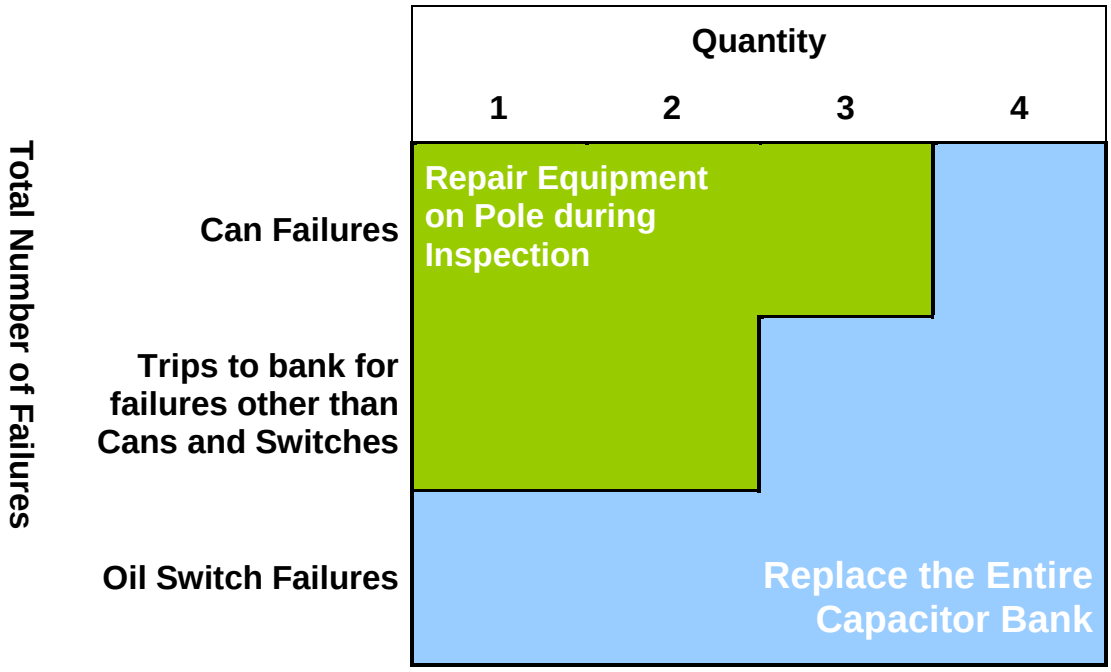

Appendix 3 – PR153

Northeast
Utilities System

CL&P Distribution Construction Methods

PRODUCT REVIEW

 # 153 Dated 07-31-03
Name: A. H. Palmer

Hand Held QUICK CHECK Transformer & Capacitor Tester

This product Review is being issued to make everyone aware that a new hand held transformer and capacitor tester has been added to the Tool and Equipment Standards Catalog. This tester has been used favorably by PSNH personnel. This tester features large copper alligator clips with heavy duty boots and rubber insulated coiled test leads, powered by a 9volt battery, bright LED indicators, audible alarm, built-in self test feature, one button test, and comes with a carrying case.

This tester can be used for quick and easy checks of de-energized transformers & capacitors and the connections made to them. It can test for both primary and secondary shorts or opens (including internal fuses and breakers) in either single or three phase transformers, including potential and other instrument transformers. It can test capacitors individually or connected in banks for both shorts or opens.

Stock Code: **571918**



PLEASE SHARE THIS INFORMATION WITH ALL APPROPRIATE PERSONNEL

Northeast Utilities System TD PROCEDURE		**TD 832 Rev. 3** **Capacitor Bank Inspection and Repair**	
Issue Date: 6/28/2010	**Effective Date:** **7/5/2010**	Owner Department: CL&P Maintenance SME Name, Department: Ed Parke – Distribution Maintenance Programs	Applicability: CT, MA

All changes to TD procedures are controlled by TD 001
"Writing, Revising, and Publishing Transmission and Distribution Procedures."

Roll Out Instructions:
Prior to initial use of this updated procedure, CL&P & WMECO personnel shall be briefed by appropriate supervisors, during a Safety Meeting or similar, on the applicable requirement within this TD, for the following departments:

- Maintenance Department
- Customer Operations Department

Approvals:

CL&P: _____
Name: Kenneth B. Bowes
Title: Vice President –Customer Operations

CL&P: _____
Name: Robert C. Dobson
Title: Director- Engineering

WMECO: _____
Name: Bliss A. Young
Title: Director-Operations

WMECO: _____
Name: Michael T. Smith
Title: Director-Operations Support & Engineering Compliance

Procedure applicable only to NU companies for which an approval signature appears above.

Ensure you are using the current revision by verifying it against the controlled electronic copy located on the Distribution Engineering Standards Bookshelf or the Regulated Businesses Policies and Procedures Lotus Notes Database.

TABLE OF CONTENTS

1. INTRODUCTION 3
1.1 Objective 3
1.2 Applicability 3
1.3 References 3
1.4 Discussion 3
2. INSTRUCTIONS 5
2.1 Capacitor Bank Inspection and Control Repair 5
2.2 Capacitor Bank Repair 6
2.3 Capacitor Bank Replacement 9
2.4 Evaluation of Capacitor Performance 10
3. Summary of Changes 11

ATTACHMENTS

Attachment 1 Capacitor Repair/Replacement Matrix 12
Attachment 2 Capacitor Conversion and Tolerance Table 13

1. INTRODUCTION

1.1 Objective

Provide instructions for scheduling, performing, and reporting distribution and substation capacitor bank inspections.

1.2 Applicability

This procedure is applicable to the Maintenance, Customer Operations, and Asset Management groups.

1.3 References

Unless otherwise specified:

- Forms are available through Lotus Notes NU Forms Catalog or NU Forms Catalog.
- Standard DTR 19.131, Capacitor Fusing Guide Overhead System
- TD 941 Preparing for Summer Peak Loading (etc.)
- MIP-GDL-001 Capacitor Inspection and Repair Data in Cascade and SmartSet
- TD 706 “Pole Top Capacitor Bank Inspection and Test”
- Procedures are available in
  - Standards Bookshelf on the NU Net at:

    http://rbgit-prod.nu.com/standards/standard.pdf
  - Document Control database in Lotus Notes

Supporting Programs and Databases
Programs and databases that support performance of activities directed by this procedure:

- CASCADE
- Northeast Utilities Maintenance Manual (NUMM) section 5.05
- STORMS

1.4 Discussion

Asset Management is responsible for periodically reviewing pole-top capacitor history to determine trends which may lead to correcting system design problems. Adding, removing and determining the need for specific capacitor banks.

Substation Maintenance and Customer Operations responsibilities vary, depending on inspection results, and specific activities are outlined in sections 2.1-2.3.

New Service is responsible for writing capital work orders to replace capacitor controls or entire banks.

Capacitor bank inspections are performed at the frequencies specified by the NUMM. One capacitor inspection is required annually in the Spring. An optional inspection may be performed in the Fall. Inspection schedules may be accelerated if the capacitor bank has a history of vandalism or other safety or security problems.

The inspection will focus on the program described in section 5.05 of the NUMM. Each bank will be inspected and banks with controls will be operated by an electrician adhering to proper switching procedures. If the repair is necessary or the unit needs to be replaced, a yellow tag will be placed on the bank in the respective SDL's name. Customer Operations will work with Substation Maintenance to schedule all repairs. The inspections and follow up repairs will be performed in the following time frame:

Spring Inspection/repairs

3/1 through 5/15 - Electricians inspect, operate and repair

3/1 through 6/1 - Repair/replace yellow tagged capacitors identified during electrician only inspection

To effectively repair yellow tagged banks Customer Operations will take sufficient repair parts on the inspection/repair such that repairs can be made on the spot as found. This includes replacing cutouts, switches, lightning arresters and single cans. Customer Operations will refer to CASCADE history and the "capacitor repair/replace matrix" (See Attachment 1) to determine if parts will be replaced or the entire bank needs to be changed.

Capital work orders will be "as-built" after on the spot repairs that involve replacement of units of property (including controls) are completed as appropriate. CASCADE will be updated to the component level to reflect the history for each capacitor bank. All repairs, additions and replacements, will be completed in accordance with TD 941. (June 1 of current year.)

Entire bank replacements are to be complete by the completion date specified in the work order and TD 941.

2. INSTRUCTIONS

2.1 Capacitor Bank Inspection and Control Repair

Substation Maintenance (DSSE)

2.1.1 COORDINATE with Maintenance Planner and SCHEDULE annual inspections to be spread evenly across the following inspection periods:

Spring Inspections/Repairs

- 3/1 through 5/15

Optional Fall Inspection/Repairs

- 9/1 through 10/31

2.1.2 ENSURE all pole mounted capacitor banks are inspected.

2.1.3 ENSURE sufficient control repair parts are taken into the field to make on the spot repairs where possible.

Substation Maintenance (Electrician)

2.1.4 INSPECT capacitor bank in accordance with NUMM.

2.1.5 For banks with controls OPERATE capacitor control.

2.1.6 RETURN capacitor control to original position.

2.1.7 REPAIR broken controls on the spot as practicable.

2.1.8 REPORT to DSSE all repairs completed and new equipment installed.

2.1.9 IF repairs cannot be completed, PERFORM the following:

a. CONTACT the SOC.

b. PLACE a Yellow Tag on the capacitor in the name of the respective SDL for an upper unit problem, or in the name of the respective DSSE if a control problem.

Substation Maintenance (DSSE)

2.1.10 IF control repairs were made on the spot, PERFORM the following:

a. CREATE a Cascade corrective maintenance work order.

b. RECORD the description of the repairs in the work order comments.

c. CLOSE the Cascade work order.

2.1.11 REVIEW results of inspection/repairs.

2.1.12 IF a control was replaced REQUEST New Service CREATE an “As-Built” capital work order and CHARGE units of property and labor to this work order.

2.1.13 IF yellow tags have been placed for additional repairs PERFORM the following:

a. CREATE a Cascade corrective work order.

b. REVIEW with SDL/FSL, Circuit Owner, and Planner, the list of yellow-tagged capacitor banks that need a follow up repair.

Customer Operations(FSL/SDL)

2.1.14 REFER to Section 2.4 and COORDINATE repairs of yellow-tagged capacitors with Planner and DSSE to spread evenly across the following periods:

Spring Repairs/Replacement

- 4/1 through 5/31

Optional Fall Inspection/Repairs

- 10/1 through 2/28

2.2 Capacitor Bank Repair

Customer Operations(FSL/SDL)

2.2.1 ENSURE Customer Operations has enough spare parts in the field so that repairs can be done on the spot, unless the unit needs to be replaced.

Customer Operations (Field Overhead)

NOTE

Unless inoperable, capacitor installations with control boxes shall be energized/de-energized using the control.

2.2.2 INSPECT and TEST bank as necessary to determine faulty component(s) by completing the following:

a. REMOVE capacitor bank from service as follows:

1) If equipped, OPEN all vacuum & oil switches.

2) OPEN all closed cutouts.

3) REMOVE cutout fuse doors.

4) REMOVE cutout line taps.

5) WAIT 5 minutes.

6) TEST for potential, if found de-energized, INSTALL worker's grounds with bushings short circuited, and bonded to the capacitor case or rack.

b. Visually INSPECT bank for the following:

1) Bulging cans

2) Oil leaks

3) Cracked bushings

c. If installed, REMOVE worker's grounds and short circuits from bushings.

d. DISCONNECT phase jumpers between capacitor cans.

e. PERFORM capacitance test as follows:

1) REVIEW capacitance meter manufacturer's instructions.

2) CALIBRATE capacitance meter.

3) CONNECT test leads to capacitor-can bushings.

4) ENSURE good test lead connection.

5) MEASURE capacitance of each capacitor can.

NOTE

Acceptable capacitance readings and a satisfactory visual inspection are indications of a good capacitor can only.

The capacitance meter test may not always be correct. A failed capacitor may read within the range which would indicate that the capacitor is good. Because this is not a conclusive test, every precaution shall be taken when energizing a capacitor.

f. Refer to Attachment 2 "Capacitor Conversion and Tolerance Table" and the following and DETERMINE if capacitor can(s) are acceptable:

1) COMPARE test results to the indicated values for the size and voltage can.

2) Refer to Attachment 2 "Capacitor Conversion and Tolerance Table" and VERIFY the meter reading is within the acceptable range specified in upper and lower limits.

3) If capacitance meter reading is outside the acceptable range specified in upper and lower limits, IDENTIFY can(s) as failed.

g. If visual inspection and/or capacitance test indicates capacitor can failure(s), REFER to Attachment 1, "Capacitor Repair/Replace Matrix," and DETERMINE if the unit should be repaired on the spot or if the entire bank should be changed out.

EXAMPLES

- If history of bank shows more than 2 failures of any type, replace the bank.
- If unit has a bad oil switch, replace the bank.

2.2.3 IF the unit is repaired on the spot, PERFORM the following:

a. REPORT to SDL/FSL all repairs completed and new equipment installed.

b. CONTACT the SOC and have Yellow Tag removed.

2.2.4 RESTORE capacitor bank to service as follows:

a. INSTALL all phase jumpers and taps.

b. INSTALL new fuse links.

c. INSTALL cutout fuse doors.

d. CLOSE all closed cutouts.

e. If equipped, CLOSE all oil switches.

2.2.5 SEND the Capacitor bank material removed from service back to Central Maintenance Services (CMS) for processing.

2.2.6 IF the entire bank needs to be replaced, NOTIFY SDL/FSL to have the bank replaced as specified in Section 2.3.

SDL/FSL

2.2.7 RECORD the description of the repairs in the work order comments.

2.2.8 CLOSE the STORMS work order.

2.2.9 COMMUNICATE with DSSE to properly close any CASCADE corrective work orders.

Central Maintenance Services

2.2.10 PROCESS the capacitor banks as follows:

a. Oil switches will be removed from the capacitor rack and processed according to TD 231.

b. Old style controls should be scrapped.

2.2.11 DETERMINE if unit will be scrapped or repaired and placed back into stock.

2.3 Capacitor Bank Replacement

Asset Management

2.3.1 REVIEW pole-top capacitor history.

2.3.2 DETERMINE trends which may lead to correcting system design problems such as adding, removing, and determining the need for specific capacitor banks.

New Service

2.3.3 CREATE capital work order for capacitor bank replacement.

Customer Operations(FSL/SDL)

2.3.4 COORDINATE with DSSE and Planner to schedule the replacement to be spread evenly across the following periods:

Spring Repairs/Replacement

- 4/1 through 5/31

Optional Fall Inspection/Repairs

- 10/1 through 2/28

Substation Maintenance (DSSE)

2.3.5 SUBMIT equipment add request via the Lotus Notes database CASCADE request system in accordance with TD015.

2.3.6 After request is complete FILL applicable name plate data.

Customer Operations

2.3.7 REPLACE capacitor bank.

2.3.8 SEND the Capacitor banks removed from service back to Central Maintenance Services (CMS) for processing.

2.3.9 CLOSE the STORMS work order.

Central Maintenance Services

2.3.10 PROCESS the capacitor banks as follows:

a. Oil switches will be removed from the capacitor rack and processed according to TD 231.

b. Old style controls should be scrapped.

2.3.11 DETERMINE if unit will be scrapped or repaired and placed back into stock.

2.4 Evaluation of Capacitor Performance

Asset Management

2.4.1 When all inspection routes are complete, PREPARE inspection summary and INCLUDE the following:

- Repairs completed to component level
- Required bank replacements
- Capacitor banks off-line for high voltage

2.4.2 CONTACT New Service for adding, removing, and determining the need for specific capacitor banks.

3. Summary of changes

Changes to TD Procedures are controlled by TD 001 "Writing, Revising, and Publishing Transmission & Distribution Procedures."

Revision 1

1. Procedure extensively revised as part of TD Procedure Upgrade Project initiated in June 2002, which included:
   - Upgrading to new TD procedure format
   - Accommodating processes and NU organization in place at time of upgrade
   - Reviewing applicable regulations and policies, and revising procedure based on that review

Revision 2

1. Procedure revised to reflect change in business practices as part of Capacitor Workout, November 2004, which includes:
   - Added Attachment 1, "Capacitor Repair/Replace Matrix"
   - Added to Discussion section:
     - expectations for inspection/repair team crew, checking fuse sizes and types
     - designated ownership of repairs, equipment history update and periodic database reviews
     - inspection/repair process philosophy
   - Added to Instructions section details on inspecting, repairing and capturing data for the equipment history database

Revision 3 – Effective Date: 7/5/2010

1. Procedure revised to reflect changes in work practices including:

- Accommodating processes and NU organization in place at time of upgrade
- Reviewing applicable regulations and policies, and revising procedure based on that review and the NUMM
- Changed title from Capacitor Bank Inspection **and Repair**to Capacitor Bank Inspection and Repair.
- Updated the Owner, the SME and the Approvers.

Attachment 1
Capacitor Repair/Replacement Matrix
(Sheet 1 of 1)

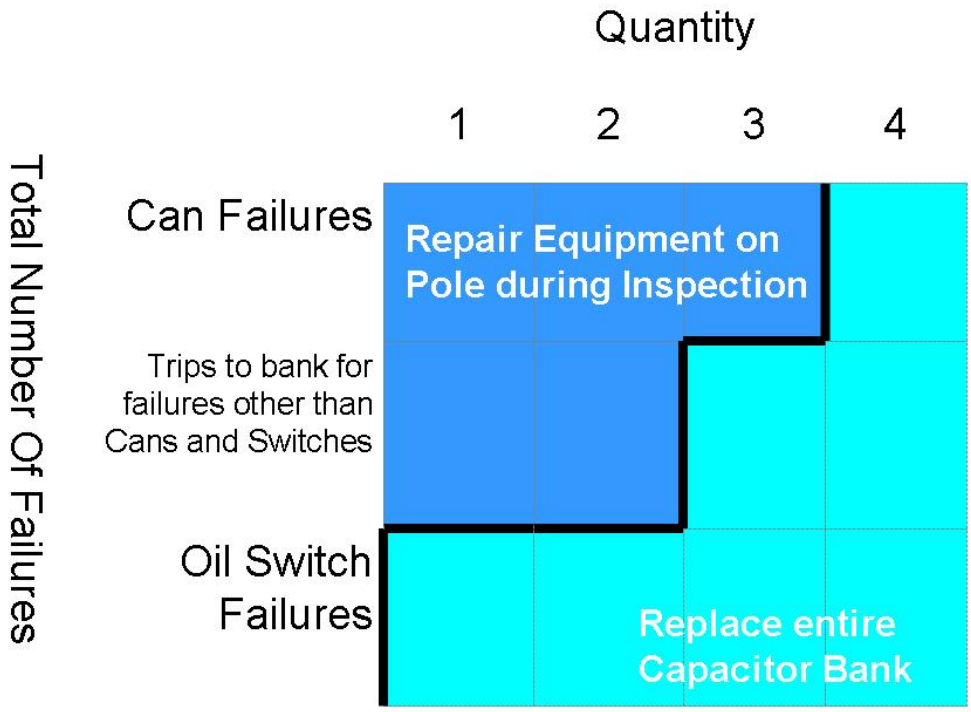

Attachment 2
Capacitor Conversion and Tolerance Table

(Sheet 1 of 1)

System Line Voltage: kv	Capacitor-Can Voltage Rating: kv	kvar	Capacitor Rating: Microfarads*		
			Ideal[1]	-5%[2]	+15%[3]
4.16Y/2.4	2.4	15	6.90	6.555	7.935
		25	11.50	10.925	13.225
		50	23.0	21.850	26.450
4.8Δ 8.32Y/4.8	4.8	15	1.725	1.639	1.983
		25	2.875	2.731	3.306
		50	5.751	5.463	6.614
		100	11.50	10.925	13.225
		200	23.0	21.85	26.45
13.2Y/7.62	7.62	50	2.282	2.168	2.624
		100	4.564	4.336	5.249
		200	9.128	8.671	10.498
13.8Y/7.96	7.96	50	2.09	1.986	2.404
		100	4.18	3.971	4.807
		200	8.36	7.942	9.614
23.0Y/13.28	13.28	100	1.503	1.428	1.728
		200	3.006	2.856	3.457

*Capacitor microfarads = $2.65 \times \frac{\text{kvar}}{\text{kV}^2}$

1. This is an ideal capacitor test reading.
2. Replace capacitor can if reading is below this value.
3. Replace capacitor can if reading is above this value.

APPENDIX 7

DISCONNECT SWITCHES

Scope:

This document outlines the minimum acceptable maintenance and testing practices for disconnect switches within Eversource distribution and transmission substations. This procedure is applicable to all Eversource employees and/or contractors who perform preventative maintenance activities on Eversource substation disconnect switches.

Reviewed by: Signature on File Date: 10/01/2021
Roderick S. Kalbfleisch
Director, Substation Technical Engineering

Reviewed by: Signature on File Date: 10/18/2021
Jennifer J. Hebsch
Director, Distribution Technical

Reviewed by: Signature on File Date: 10/18/2021
John Dipaola-Tromba
Director, Asset Management

Reviewed by: Signature on File Date: 09/08/2021
Wayne D. Gagnon
Director, Station Operations, CT

Reviewed by: Signature on File Date: 11/19/2021
Anthony A. Anzalone
Director, Station Operations, MA

Reviewed by: Signature on File Date: 11/17/2021
Eric R. Sutton
Director, Station Operations & Field Engineering, NH

Reviewed by: Signature on File Date: 09/22/2021
Guerlemps Jean
Director, Field Engineering, MA

	Description	Date
5	• Reformat the document to consolidate and include the frequency and move the testing into work method documents.	Nov 19, 2021
4	• Incorporated the following global replacements. • NU Maintenance Manual replace by Eversource Maintenance Program. • CL&P replaced by Eversource Connecticut. • WMECO replaced by Eversource Western Massachusetts. • PSNH replaced by Eversource New Hampshire. • NSTAR replaced by Eversource Eastern Massachusetts. • NUMM replaced by EMP.	July 1, 2015
3	• Clarified Basis for Inspection of single phase Reclosers. • Eliminate annual Visual Inspections of GOABs Disconnect Switches. • Clarified That the monthly Visual Inspection applies within a substation NOT “outside the fence”. • Added condition-based requirement for visual inspection of Disconnects “Outside the fence”. • Added New Note #3 to Table 5.11.1 requiring Visual Inspection of Disconnects (“outside the fence”) be performed prior to every manual operation. • Renumbered Notes for Table 5.11.1	June 1, 2014
2	• Changed Infrared Inspection from Time-Directed to Condition-Based. • Added reference to NUMM Chapter 5.22 – IR Inspection.	December 5, 2011
1	• Changed PSNH Approver to James Eilenberger, replacing Steve Johnson. • Deleted detail steps as they are now part of NUMM Instructions 6.15A and 6.15B. • Added note that those Pole-Top switches that cannot be de-energized will receive a Major Inspection in place of Major Maintenance. • Added note that the Infrared Inspection for Vertical Pole-Top and Inline Suspension • Single Phase Disconnects will be performed as part of the Backbone Inspection for Main Line Distribution. • Added requirement for Major Maintenance – De-Energized for Lines “Outside of the Fence”, as required. • Clarified definition for Single Phase Disconnects with additional information regarding Loadbreak and Non-Loadbreak switches.	July 15, 2011

1.0 Definitions 4
2.0 Introduction 4
3.0 Reference Documents....5
4.0 General 5
5.0 Inspection and Preventative Maintenance Schedule....5
6.0 Time-Directed Maintenance (Energized PM & Inspections)....6
7.0 Condition Based Maintenance (CBM)....7
8.0 Failure Finding 8

1.0 Definitions

1.1 Loadbreak Disconnect - is a switch installed for isolation purposes or for changing the configuration of active power circuits. It has load-make and load-break ratings in Amperes.

1.2 Non-loadbreak Disconnect – is a switch installed for isolation purposes with very restricted or no load-make or load-break capabilities. It can be used to energize or de-energize unloaded bus or bus segments only within the substation. It can be used to energize or de-energize unloaded circuit breakers, lightning arrestors, and other switches.

1.3 Motor Operated Control – Some three-phase disconnects are equipped with electric motor operators to open and close them. These disconnects have the ability to be operated locally or remotely.

1.4 SCADA – Some disconnect switches are connected to SCADA – an automated system that monitors the switch position, current and voltage, and provides data to a remote location. It also allows for remote operation of the switch if the switch is motor operated.

2.0 Introduction

2.1 Switches are essential elements of the electrical power distribution systems. They provide visible air gap isolation of equipment and line sections for safe examination, maintenance, and repair.

2.2 Switches are built in a variety of physical forms to accommodate the various requirements of electrical clearances, operational requirements, and space limitations.

2.3 Some substation disconnects include loadbreak hooks for use with a loadbreak tool.

2.3.1 To open the switch under load, an approved loadbreak tool or approved device shall be used.

2.3.2 Follow the instructions provided with the loadbreak tools. See DTR Substation 18.41 for the complete list of applications and restrictions for Loadbreak and Non-loadbreak disconnect switches.

2.4 Switches can be divided into three main categories:

2.4.1 Single Phase Disconnect Switches

.1.1. Single phase disconnects are defined as a switch opening one connection only, either a single-phase circuit, one phase of a multiphase circuit, or a miscellaneous application such as a neutral circuit switch.

2.4.2 Three Phase Disconnect Switches

.2.1. Three phase disconnects are defined as a switch associated with a mechanism that causes switches of the three phases to operate simultaneously.

.2.2. These switches are Gang-Operated (GOD), sometimes referred to as Gang-Operated Air Break (GOAB).

.2.3. The most common gang-operated disconnect switches are the air-break type manufactured with ratings up to 5000-amperes in voltage classes ranging from 34.5kV-345kV.

.2.4. They are used at substations, switching structures, and on the lines for isolating transformer banks and other apparatus.

.2.5. They are also used for sectionalizing. Although they can be MODs (Motor-Operated Disconnects), they are more commonly provided with a switch handle for hand operation.

.2.6. This type of switch is ideal because it lends itself to operation from the ground, often permitting service to be restored to sections of the circuit without pole climbing.

2.4.3 Regulator Bypass Switches

.3.1. Bypass switches are generally used at regulator installations to provide a quick, reliable means of taking such apparatus in and out of service without de-energizing the feeder circuits and to prevent winding burnouts from open-circuit windings.

2.5 Facilities/Equipment

2.5.1 Line Bypass, Disconnect, and Interrupter Switches

NOTE: The inspection and maintenance for single phase Pole-top disconnects is the same for "inline suspension" disconnects.

3.0 Reference Documents

WMS 60.10-234	Substation Transformer Thermography for CT, WMA and NH.
WMS 59.04-234	Substation Disconnect Switch Maintenance for CT, WMA and NH.
W10223	Substation Disconnect Switch Maintenance for EMA.
W10510	Substation Transformer Thermography for EMA.
TD 853	Infrared Thermographic Inspections

4.0 General

4.1 Only trained and qualified employees shall perform inspections and preventative maintenance on air disconnect switches.

4.2 Prior to the start of work:

4.2.1 Review all equipment drawings and reference materials.

4.2.2 Personnel are wearing the appropriate personal protective equipment (PPE).

4.3 Upon completion of work, the workspace shall be left clean and free of all debris (i.e. trash, rags, used/unused spare parts and material, etc.).

5.0 Inspection and Preventative Maintenance Schedule

Inspection Type	Inspection Interval
Time-Directed Maintenance (Energized PM & Inspections)	
Visual Inspection	1M
Infrared Inspection (GODs & S/S)	6M
Motor Control Visual Inspection	3Y

Inspection Type	Inspection Interval
Inspection/Battery Replacement	3Y
Condition-Based Maintenance (CBM)	
Major Maintenance - De-Energized	A/R
Operational Test	A/R
Correct Abnormal Conditions (Any Visual Findings)	A/R

6.0 Time-Directed Maintenance (Energized PM & Inspections)

6.1 Visual Inspection: This inspection is performed to look for conditions that may require immediate attention or unplanned maintenance.

NOTE: A Visual Inspection is performed for those Substation Disconnects that are not practical to de-energize, even when the associated equipment is being maintained and is out of service. Units that fail this inspection shall be scheduled for maintenance or replaced if conditions warrant.

6.2 It can be used to determine the overall condition of the disconnect switch and if the disconnect switch requires replacement.

6.3 This interval has proven effective in detecting problems that could impact equipment performance.

6.4 The disconnect switch can be visually inspected for the following:

6.4.1 Insulators damage

6.4.2 Frayed or broken flexible connections

6.4.3 Taps – from switch to line conductors and/or bus connections

6.4.4 Overheating (visual)

6.4.5 Condition of operating mechanism

6.4.6 Alignment of blades and proper contact

6.4.7 Signs of abnormal discharge, alignment and tripping linkage on load breaking devices

6.4.8 Mechanical condition of frame

6.4.9 Condition or pitting or arcing horns, if applicable

6.4.10 Grounds and ground attachments for proper connections

6.4.11 Obstructions that might obstruct operation or create a contact hazard

6.4.12 Debris that my hinder the performance of the switch– bird nests, kite string, etc. on switch

6.4.13 Animal Protection – missing or damaged, if applicable

6.5 Infrared Inspection: Infrared inspection is a proven technique for locating “hot spots” on equipment and connections in order to identify conditions that can be corrected before they become serious problems.

NOTE: Infrared surveys are performed on Disconnect Switches in accordance with TD 853 – Infrared Inspections.

Refer to TD 853 – Infrared Inspections for the requirements and the interval at which inspections are to be performed.

There may be special infrared survey requirements for different regions. Specifically, for EMA downtown network Stations, disconnect switches inspected may be performed quarterly.

6.6 Motor Control Visual Inspection/Battery Replacement: This inspection is performed to look for conditions for the switch-control unit that may require immediate attention or unplanned maintenance. If applicable, also verify battery date and replace battery if it has expired or will expire before next scheduled maintenance. This interval has proven effective in detecting problems that could impact equipment performance. The disconnect switch can be visually inspected for the following:

6.6.1 Condition of the control cable

6.6.2 Condition of the control cabinet

6.6.3 Compartment heater condition

6.6.4 Condition of the indicating lights

6.6.5 Refer to Work Method/Procedure WMS 59.04-234 for CT, WMA & NH, and W10223 for EMA on how to perform a battery replacement for switch-control units where applicable.

NOTE: Routine Switch Controller maintenance consists of replacing the battery packs. The frequency of replacement depends on designed battery life, ambient temperature, float charge voltage and frequency of discharge. Industry experience has shown that batteries should be replaced every two years for hot environments and three years for colder environments.

7.0 Condition Based Maintenance (CBM)

7.1 Major Maintenance - De-Energized: De-Energized Major Maintenance is performed on substation disconnects that are difficult to de-energize and therefore receive Major Maintenance only when its associated equipment is taken out of service for maintenance.

7.1.1 Please refer to Work Method/Procedure WMS 59.04-234 for CT, WMA & NH, and W10223 for EMA on how to perform a major maintenance activity for substation disconnect switches.

7.2 Operational Test: The operational test is performed at the time of Major Maintenance.

7.2.1 Please refer to Work Method/Procedure WMS 59.04-234 for CT, WMA & NH, and W10223 for EMA on how to perform an operational test for substation disconnect switches.

NOTE: The Operational Test is performed at the time of Major Maintenance.

7.3 Correct Abnormal Conditions (Any Visual Findings): Correct any abnormal conditions found during maintenance or inspections.

8.0 Failure Finding

Failures of disconnect switches shall be documented in the 'Substation Equipment Failures Database' for review and discussion at the System Operations Review Committee (SORC) and Substation Equipment Committee (SEC) meetings.

EVERSOURCE	WORK METHOD STANDARD ELECTRIC OPERATIONS ORGANIZATION

Substation Disconnect Switch Maintenance

Document Number:	Issued Date:	Revised Date:	Revision:	Applicability:
WMS 59.04-234	19-Nov-21	---	0	CT/WMA/NH

Scope:

This document details the routine maintenance for disconnect switches located within a Substation

Safety:

Providing a work environment, free of recognized hazards is a value at Eversource. Therefore, prior to the start of any work, ensure that you are familiar and knowledgeable with all Eversource Safety Rules, Policies and Procedures that are applicable to the work and tasks at hand and perform a job brief at the job site, prior to commencing work. PPE requirements to protect the worker shall be followed as required in the Eversource Employee Safety Manual.

Rev No.	Description	Date
0	Original Document	November 19, 2021

EVERSOURCE	WORK METHOD STANDARD ELECTRIC OPERATIONS ORGANIZATION

Substation Disconnect Switch Maintenance

Document Number:	Issued Date:	Revised Date:	Revision:	Applicability:
WMS 59.04-234	19-Nov-21	---	0	CT/WMA/NH

Approved by: *Signature on File* Date: 04-Aug-21
Jonathan Duffy
Director, Safety

Approved by: *Signature on File* Date: 24-Aug-21
Jennifer Hebsch
Director, Distribution Technical

Approved by: *Signature on File* Date: 08-Sep-21
Wayne Gagnon
Director, Station Operations, CT

Approved by: *Signature on File* Date: 19-Aug-21
Eric Sutton
Director, Station Operations, NH

Approved by: *Signature on File* Date: 19-Nov-21
Anthony Anzalone
Director, Station Operations, MA

Approved by: *Signature on File* Date: 27-Aug-21
Guerlemps Jean
Director, Field Engineering & Communications, EMA

Approved by: *Signature on File* Date: 10-Aug-21
Kevin Harris
Director, Field Engineering & Communications, CT

Table of Contents

Section		Page
1.0	Introduction	4
2.0	Reference Documents	4
3.0	Generals	4
4.0	Single Phase De-Energized Switch Maintenance	4
5.0	3 Phase De-Energized Switch Maintenance	7
6.0	Battery Replacement Instructions	9
7.0	Operational Test	10
8.0	Appendix A – S&C Alignment Procedure	11

1.0 Introduction

1.1 Generally, substation disconnect switches consist of a conducting blade, hinged at one end, and a stationary contact on the other, both terminals mounted on that conform to the common insulator requirements of BIL coordination.

1.2 Locking devices are provided to keep the disconnects from being opened accidentally or from being blown open during periods of heavy fault currents passing through them.

2.0 Reference Documents

ESOP 100	Switching and Tagging
M4-WP-3128	Vehicle Grounding Requirements
TD852	Lockout/Tagout for Electrical Equipment and Other Equipment Related Energy Sources
TD855	Grounding for Personal Protection on Overhead Distribution Lines
WMS 89.06-234	Protective Grounding Inside Substation
WMS 89.07-234	Vehicle and Equipment Grounding in Substations
WMS 89.11-234	Maintenance & Testing of Substation Protective Grounding Equipment
WMS 88.11-234	Substation Work Area Identification
WMS 88.12-234	Substation Fall Protection
WMS 86.01-234	Equipment Lubrication

3.0 Generals

3.1 Clearance shall be given by the System Control Center as specified under the provisions of the applicable Eversource switching authority. Refer to **ESOP 100**.

3.2 Check and validate any tags associated with the switch being tested.

3.3 Verify all prints and drawings being used are for the switch being tested.

3.4 When required, review associated print(s) to understand the tripping logic.

4.0 Single Phase De-Energized Switch Maintenance

4.1 Verify the switch is de-energized, isolated, and tagged in accordance with **ESOP 100**.

4.2 Verify the switch and lines have been grounded in accordance with **WMS 89.06-234** and **WMS 89.07-234** prior to any maintenance activities.

4.3 Isolate the switch from all other possible energy sources in accordance with **TD852**, as required.

4.4 Check for broken plastic cams on the blades.

4.5 Inspect the insulators for breaks, cracks, burns, or cement deterioration.

4.5.1 Clean the insulators particularly where abnormal conditions such as salt deposits, cement dust, or acid fumes exist.

.1.1. Cleaning minimizes the possibility of flashover from the accumulation of foreign substances on the insulator surfaces.

4.5.2 Replace any broken or defective insulators immediately.

NOTE: The S&C disconnect switches require inspection / adjustment to ensure proper blade alignment. Refer to Appendix A "S&C Alignment Procedure" following the Operational Test section for instructions on adjusting the S&C Disconnect Switches.

4.6 Inspect the switch for:

4.6.1 Alignment

4.6.2 Contact pressure

4.6.3 Eroded contacts

4.6.4 Corrosion

4.6.5 Mechanical malfunction

NOTE: S&C Omni-Rupter® Switch blade contacts are greaseless and self-lubricating. Do not apply lubricant to the blade contacts.

4.7 Replace damaged or badly eroded components.

4.7.1 If contact pitting is minor, smooth the surface with clean, fine emery cloth or as the manufacturer recommends.

NOTE: Scotch-Brite™ may be used on silver contacts when a wire brush cannot be used.

4.8 For non-self-lubricating contacts ONLY:

4.8.1 Clean and lubricate the contacts with a thin film of manufacturer-recommended lubricant, i.e. non-oxide. Refer to **WMS 86.01-234**.

4.9 Operate the switch several times and check it for smooth operation.

4.10 Clean and lubricate the bearings with the manufacturer recommend lubricant, if applicable. Refer to **WMS 86.01-234**.

4.11 Inspect the blade latch for adjustment.

4.11.1 Ensure the blades move freely and still are rigid enough for proper alignment with contacts.

4.12 Perform resistance testing on the contacts for each phase using a micro-ohm meter connected bus-to-bus.

4.12.1 Record the results.

4.12.2 Perform resistance testing on the remaining components including the jaws, hinges, and connectors to determine their condition.

4.13 Inspect all live parts for scarring, gouging, or sharp points that could contribute to excessive radio noise and corona.

4.14 Inspect inter-phase linkages, operating rods, levers, bearings, etc., to ensure that adjustments are correct, all joints are tight, and that pipes are not bent.

4.14.1 Clean and lubricate the switch parts, as required.

4.14.2 Check for simultaneous closing of all blades and for proper seating in the closed position.

4.15 Inspect the gear boxes for moisture that could cause damage due to corrosion or ice formation, if possible.

4.16 Inspect the flexible braids or slip-ring contacts used for grounding the operating handle and replace those showing signs of corrosion, wear, or having broken strands.

4.17 Power-operating mechanisms for switches are usually of the motor-driven type.

4.17.1 Follow the switch manufacturer's instructions for maintaining each mechanism. Check the limit switch including external switches for:

.1.1. Poor contacts

.1.2. Burned out coils

.1.3. Adequacy of supply voltage

.1.4. Any other conditions that might prevent the proper functioning of the complete switch assembly.

4.18 Inspect the overall switch and working condition of operating mechanism:

4.18.1 Check that the bolts (including the piercing bolts on the operating shaft), nuts, washers, cotter pins, and terminal connectors are in place, properly torqued and in good condition.

4.18.2 Replace items showing excessive wear or corrosion.

4.18.3 Inspect all bus cable connections for signs of overheating or looseness.

4.19 Inspect and check all safety interlocks while testing for proper operation.

4.20 Inspect the switch to ensure equal pole closing and opening.

4.21 Ensure that each switch-pole toggle mechanism lies against its closed stop, as applicable.

4.21.1 Adjust the stop-bolt or crank-arm length as necessary. Refer to the manufacturer’s manual and Figure 1.

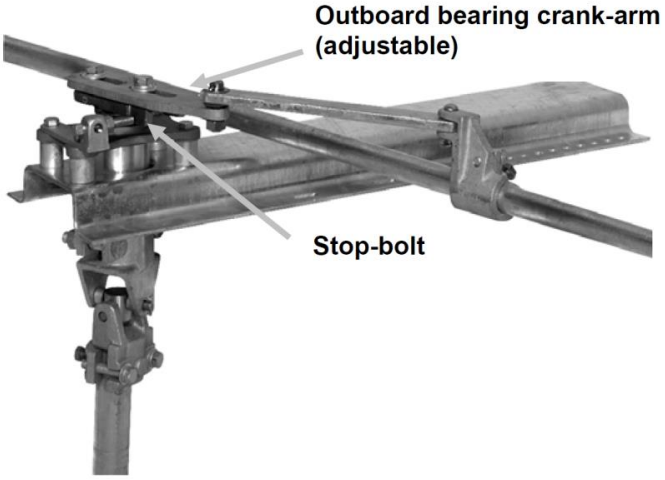

Figure 1 – Checking Switch Toggle Position on S&C Disconnect

4.22 Operate the MOD to ensure its smooth operation. Listen for grinding noises or other signs of wear or malfunction.

4.23 Record any abnormal conditions, any repairs made, and any repairs still needed into Cascade.

4.24 Check the battery date and replace the battery if it has expired or will expire before the next scheduled maintenance, if applicable.

4.25 Record any abnormal conditions.

4.25.1 Create Cascade Mx-work orders for all repairs.

5.0 3 Phase De-Energized Switch Maintenance

5.1 Verify the switch is de-energized, isolated, and tagged in accordance with **ESOP 100**.

5.2 Verify the switch and lines have been grounded in accordance with **WMS 89.06-234** and **WMS 89.07-234** prior to any maintenance activities.

5.3 Isolate the switch from all other possible energy sources in accordance with **TD852**, as required.

5.4 Check for broken plastic cams on the blades.

5.5 Inspect the insulators for breaks, cracks, burns, or cement deterioration.

5.5.1 Clean the insulators particularly where abnormal conditions such as salt deposits, cement dust, or acid fumes exist.

.1.1. This minimizes the possibility of flashover from the accumulation of foreign substances on the insulator surfaces.

5.5.2 Replace any broken or defective insulators immediately.

NOTE: The S&C disconnect switches require inspection / adjustment to ensure proper blade alignment. Refer to Appendix A "S&C Alignment Procedure" following the Operational Test for instructions on adjusting the S&C Disconnect Switches.

5.6 Inspect the switch for:

5.6.1 Alignment

5.6.2 Contact pressure

5.6.3 Eroded contacts

5.6.4 Corrosion

5.6.5 Mechanical malfunction

NOTE: S&C Omni-Rupter® Switch blade contacts are greaseless and self-lubricating. Do not apply lubricant to the blade contacts.

5.7 Replace damaged or badly eroded components.

5.7.1 If contact pitting is minor, smooth the surface with clean, fine emery cloth or as the manufacturer recommends.

NOTE: Scotch-Brite™ may be used on silver contacts when a wire brush cannot be used.

5.8 For non-self-lubricating contacts ONLY:

5.8.1 Clean and lubricate the contacts with a thin film of manufacturer-recommended lubricant, i.e. non-oxide. Refer to **WMS 86.01-234**.

5.9 Clean and lubricate the bearings with the manufacturer recommend lubricant, if applicable. Refer to **WMS 86.01-234**.

5.10 Inspect the blade latch for adjustment.

5.10.1 Ensure the blades move freely and still are rigid enough for proper alignment with contacts.

5.11 Inspect all live parts for scarring, gouging, or sharp points that could contribute to excessive radio noise and corona.

5.12 Inspect inter-phase linkages, operating rods, levers, bearings, etc., to ensure that adjustments are correct, all joints are tight, and pipes are not bent or cracked.

5.12.1 Clean and lubricate the switch parts, as required. Refer to **WMS 86.01-234**.

5.13 Inspect the gear boxes for moisture that could cause damage due to corrosion or ice formation, if possible.

5.14 Inspect the flexible braids or slip-ring contacts used for grounding the operating handle.

5.14.1 Replace when broken or signs of corrosion or wear are present.

5.15 Power-operating mechanisms for switches are usually of the motor-driven type.

5.15.1 Follow the switch manufacturer's instructions for maintaining each mechanism. Check the limit switch including external switches for:

.1.1. Poor contacts

.1.2. Burned out coils

.1.3. Adequacy of supply voltage

.1.4. Any other conditions that might prevent the proper functioning of the complete switch assembly.

5.16 Inspect the overall switch and working condition of operating mechanism:

5.16.1 Inspect the bolts (including the piercing bolts on the operating shaft), nuts, washers, cotter pins, and terminal connectors are in place and in good condition.

5.16.2 Replace items showing excessive wear or corrosion.

5.17 Inspect all bus cable connections for signs of overheating or looseness.

5.18 Inspect and check all safety interlocks and verify testing for proper operation.

5.19 Inspect the switch to ensure equal pole closing and opening.

5.20 Operate the switch to ensure its smooth operation. Listen for grinding noises or other signs of wear or malfunction.

5.20.1 Check for simultaneous closing of all blades and for proper seating in the closed position.

5.20.2 Check for simultaneous opening of all blades.

5.21 Record any conditions that require follow-up repair in Cascade.

5.21.1 Create Cascade Mx-work orders for all repairs.

6.0 Battery Replacement Instructions

6.1 Notify Dispatch before beginning work.

6.2 Ensure the battery cables are clearly marked at the battery terminal and battery charger ends to avoid improper connection.

6.3 Clearly mark the date of installation on the battery for replacement purposes.

6.4 Removing the old battery:

6.4.1 Open the front enclosure door.

6.4.2 Place the switch control on “local” control.

6.4.3 Ensure that voltage sensing is turned “OFF”, if applicable.

6.4.4 Decouple the unit.

6.4.5 Turn OFF the AC low voltage supply.

6.4.6 Open the DC knife blades.

6.4.7 Open the battery enclosure.

6.4.8 Disconnect the battery (negative terminal first, followed by the positive terminal) and remove it.

6.5 Installing the new battery:

6.5.1 Before installing the new battery, verify the settings on the constant burden battery charger as follows:

.1.1. Short-circuit the output terminals of the battery charger with a jumper.

.1.2. Turn ON the low voltage supply to energize the battery charger and verify that charging current reads 225 milli-amperes. Adjust the “burden adjust” to 225 mA, as necessary and lock it in.

.1.3. Turn OFF the AC low voltage supply to de-energize the battery charger. Remove the short-circuiting jumper from the output terminals.

.1.4. Turn ON the AC low voltage supply to energize the battery charger.

.1.5. Using a voltmeter, verify or adjust the charger to a voltage output of 13.3 volts. DC. Adjustment is made using the “output adjust” control.

6.5.2 Turn OFF the AC low voltage supply to de-energize the battery charger.

6.5.3 Install the new battery and connect it – positive terminal first, followed by the negative terminal.

6.5.4 Perform a load check on the battery to ensure it is good.

6.5.5 Ensure the constant burden battery charger functions correctly as follows:

.5.1. Clip the voltmeter leads to the output terminals of the charger and observe the battery voltage.

.5.2. Turn ON the AC low voltage supply to energize the battery charger and observe the output voltage as well as the DC charging current.

.5.3. Verify that as the output recovers to 13.3 volts DC, the charging current tapers off to a “trickle-charge” level.

6.5.6 With the AC low voltage supply still ON, close the DC knife blades.

6.5.7 Couple the unit.

6.5.8 Turn ON voltage sensing (if applicable).

6.5.9 Place the unit on “supervisory” or “auto” control.

6.5.10 Close and lock both enclosures.

6.5.11 Notify the dispatcher that the battery replacement is complete, and the switch is back in its normal state.

7.0 Operational Test

7.1 Perform the operational test in conjunction with maintenance of the equipment to which the switch is attached.

7.2 Ensure that the switch is bypassed or transfer the load before performing the test.

7.3 Record any abnormal conditions, repairs required, or repairs made in the comments section.

7.4 Follow-up repairs require the creation of Cascade Mx-work orders.

8.0 Appendix A – S&C Alignment Procedure

8.1 OPEN and CLOSE the interrupter switch vigorously through its full travel without hesitation at any point.

8.1.1 Be prepared to apply additional force to maintain full speed when operating effort increases as the switch blades engage the interrupters.

CAUTION: Failure to properly adjust the handle may cause contact overheating or arcing, damaging the blade contacts. Injury to operating personnel may result.

8.2 Adjust the stop plates to remove all excess play from the operating mechanism and to attain proper "windup" tension before energizing the switch.

NOTE: Slack in the operating pipe may allow the switch to creep out of the fully CLOSED position.

8.3 Loosen the bolts that secure the adjustable stop plates to the foot bearing support plate. Refer to Figure A1.

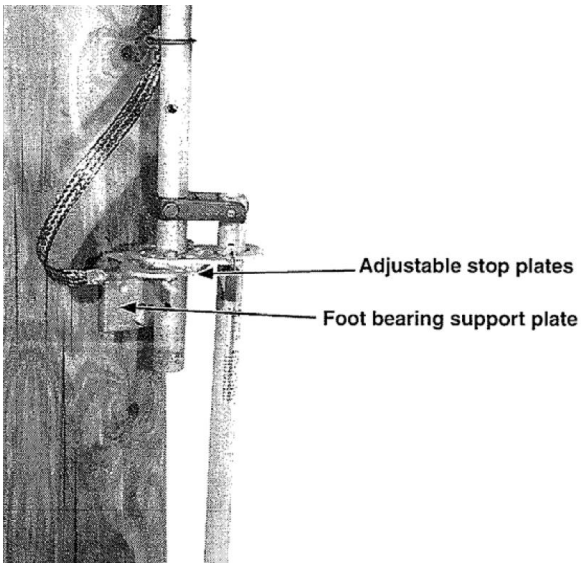

Figure A1 – Foot Bearing Assembly and Operating Handle Assembly

8.4 Place the switch in the fully OPEN position.

8.4.1 Adjust the OPEN position stop plate so that the handle, when lowered, fits into the OPEN-position slot.

8.5 Mark the location of the OPEN position stop plate on the support plate.

8.6 Fully CLOSE the switch. Apply sufficient pressure to the handle in the closing direction to remove all play in the operating-pipe linkage.

8.7 Adjust the CLOSED position stop plate so that the handle will require even greater pressure to force it into the closed-position slot.

8.8 Mark the location of the CLOSED position stop plate on the support plate.

8.9 While holding both stop plates in the previously marked positions, torque the bolts to secure the stop plates to the support plate.

8.10 Move the handle to the OPEN position.

8.10.1 Verify the handle, when lowered, fits firmly into the OPEN position slot.

8.11 Move the handle to the CLOSED position.

8.12 Verify:

8.12.1 All play in the operating pipe linkage has been taken up before the handle can be lowered into the CLOSED position slot.

8.12.2 Substantial pressure is required to force the handle into the closed-position slot.

8.13 Recheck and ensure that all clamp bolts and piercing set screws are properly tightened.

APPENDIX 8

POLE TOP REGULATORS

Scope:

This document details the maintenance of Voltage Regulators on the Distribution and Substation System.

Safety:

Providing a work environment, free of recognized hazards is a value at Eversource. Therefore, prior to the start of any work, ensure that you are familiar and knowledgeable with all Eversource Safety Rules, Policies and Procedures that are applicable to the work and tasks at hand and perform a job brief at the job site, prior to commencing work. PPE requirements to protect the worker shall be followed as required in the Eversource Employee Safety Manual.

Connecticut

Approved by: *Signature on File* Date: 28-Jun-23
Wayne Gagnon
Director, Station Operations

Approved by: *Signature on File* Date: 28-Jun-23
Barry Lashley
Director, Electric Operations

Approved by: *Signature on File* Date: 03-Jul-23
Christopher Menard
Director, Electric Operations

Approved by: *Signature on File* Date: 05-Jul-23
Clifford Williams
Director, Electric Field Operations

Approved by: *Signature on File* Date: 28-Jun-23
Jeffrey Richard
Director, Distribution Engineering

Massachusetts

Approved by: *Signature on File* Date: 05-Jul-23
Umair Zia
Director, Distribution Engineering

Approved by: *Signature on File* Date: 03-Jul-23
Robert O'Loughlin
Director, Electric Operations

Approved by: *Signature on File* Date: 28-Jun-23
Anthony Anzalone
Director, Station Operations

Approved by: *Signature on File* Date: 06-Jul-23
Guerlemps Jean
Director, Field Engineering /Communications

Approved by: *Signature on File* Date: 28-Jun-23
Mark Baldwin
Director, Electric Field Operations, Boston

Approved by: *Signature on File* Date: 29-Jun-23
Daryle Brown
Director, Electric Field Operations, Central

Approved by: *Signature on File* Date: 06-Jul-23
Kevin Saulnier
Director, Electric Field Operations, South

Approved by: *Signature on File* Date: 30-Jun-23
David Velez
Director, Electric Field Operations, West

New Hampshire

Approved by: *Signature on File* Date: 28-Jun-23
Jason Yergeau
Director, Electric Operations

Approved by: *Signature on File* Date: 28-Jun-23
Eric Sutton
Director, Station Operations

Approved by: *Signature on File* Date: 28-Jun-23
Russel Johnson
Director, Distribution Engineering

Tri-State

Approved by: *Signature on File* Date: 28-Jun-23
Jennifer Hebsch
Director, T&D Standards Engineering

Approved by: *Signature on File* Date: 18-Jul-23
Fatou Dieng
Director, Asset Management

Approved by: *Signature on File* Date: 03-Jul-23
Demetrios Sakellaris
Director, Substation Technical Engineering

Rev No.	Description	Date
5	1. Changed names of the Approvers on the Signature page, as required. 2. Added reference to TD 861. 3. Added Pad-mounted Regulators Maintenance. 4. Updated Failure Findings section to reflect current reporting process. 5. Added 'Condition-Based' in Table 1, S/S Maintenance Schedule.	July 18, 2023
4	1. Changed names of the Owner, SME, and Approvers on the Signature page, as required. 2. Incorporated the following global replacements: • NU Maintenance Manual replaced by Eversource Maintenance Program • CL&P replaced by Eversource Connecticut • WMECO replaced by Eversource Western Massachusetts • PSNH replaced by Eversource New Hampshire • NSTAR replaced by Eversource Eastern Massachusetts • NUMM replaced by EMP	July 1, 2015
3	1. Added NSTAR signature requirement to the Approval list and changed names and titles as required.	March 31, 2014
2	1. Changed IR inspection requirement from Time-Directed to Condition-Based. 2. Added reference to NUMM Chapter 5.22 for IR inspection requirements and intervals. 3. Updated SME to Alyne Silva.	December 5, 2011
1	1. Deleted detail maintenance steps as they are included in Instruction 6.01. 2. Deleted all references to "Critical Pole-Top Regulators." 3. Clarified conditions for performing a Major Maintenance. 4. Clarified oil sampling requirements (Substation only). 5. SME changed to Andrew Nunes.	July 15, 2011
0	1. Original Document	---

1.0 Introduction 7
2.0 Reference Documents.....7
3.0 Definitions 7
4.0 Inspection and Maintenance Activity Schedules 7
5.0 Maintenance Categories 8
6.0 Failure Findings.....9
7.0 Voltage Regulator Maintenance Basis Documentation 9

1.0 Introduction

1.1 Regulators play a significant role in helping electrical loads operate most effectively at their rated voltage. It is important that the rated voltages supplied to these loads are maintained as nearly constant as possible.

NOTE: All specific maintenance requirements that are followed by a triangle symbol "▲" are explained in the Maintenance Basis Documentation section of this chapter.

2.0 Reference Documents

EMP 5.22 Infrared Inspections

EMP 6.01 Voltage Regulators

TD 861 Reporting Distribution Equipment Failures and Defects

3.0 Definitions

3.1 The abbreviations used for the intervals are:

3.1.1 Y = Year, i.e. 2Y = 2 Years

3.1.2 M = Month

3.1.3 A/R = As Required

4.0 Inspection and Maintenance Activity Schedules

Table 1 – Voltage Regulator Maintenance Intervals

Pole-Mounted Maintenance Schedule	Interval
Time-Directed	
Routine Inspection ▲	1Y
Condition-Based	
Major Maintenance	A/R (Note 1)
Correct any defects found during **Routine Inspection,** such as low oil level, faulty operation counter, etc.	A/R
Infrared Survey	A/R (Note 2)
Pad-Mounted Maintenance Schedule	**Interval**
Time-Directed	
Routine Inspection	1Y
Infrared Survey	(Note 2)
Condition-Based	
Major Maintenance	A/R

S/S Maintenance Schedule	Interval
Time-Directed	
Routine Inspection ▲	1M
Oil Sample (Substation Regulators Only)	5Y
Condition-Based	
Major Maintenance	A/R (Note 1)
Correct any defects found during **Routine Inspection,** such as low oil level, faulty operation counter, etc.	A/R
Infrared Survey	A/R (Note 2)

NOTES: 1. Major Maintenance for Substation Regulators is only required when the results of oil analysis indicate there is a problem with the Regulator and is typically performed at the shop. Major Maintenance for all Pole-top Regulators is performed at the shop whenever they are taken out of service.

2. Infrared surveys are performed on Regulators in accordance with the requirements of **EMP 5.22** – Infrared Inspections. Refer to **EMP 5.22** for inspection requirements and the interval at which inspections are to be performed.

3. The time interval between maintenance activities will depend upon frequency of tap-changer operation and the load on the Regulator. Regulators subjected to numerous overloads and a high load factor may require more frequent inspections than those carrying normal loads. The initial maintenance interval will be as listed above, and will be adjusted in the future, based on collected performance data.

5.0 Maintenance Categories

5.1 See **EMP 6.01** for details on performing the following maintenance tasks.

Table 2 – Maintenance Categories

Type	Inspection Type	Energized / De-Energized
Time-Directed	Routine Inspection	Energized
	Oil Top-Off	De-Energized
	Oil Sampling	Energized or De-Energized
Condition-Based	Major Maintenance	De-Energized
	Return to Service	---
	Infrared Survey	See **EMP 5.22**

6.0 Failure Findings

6.1 Failures of devices shall be documented in the failure reporting system used by your region and appropriate for the asset class.

6.1.1 Distribution equipment failures shall be reported using EFRS. See **TD 861** for additional information.

6.1.2 Distribution asset failures shall be documented using Maximo.

6.1.3 Stations asset failures shall be documented using CASCADE.

7.0 Voltage Regulator Maintenance Basis Documentation

Table 3 – Voltage Regulator Maintenance Basis Documentation

Requirement	Basis
Inspection Interval – 1Y	The Regulators manufacturer's maintenance manuals do not specify a time interval for inspection and oil sampling. They state that inspection and oil sampling functions are condition-based and are dependent upon the frequency of tap-changer operation and the load on the Regulator. Industry experience with Automatic Voltage Regulator performance testing as listed in: • Council Controls Working Group (WG) Recommendations Policy • U.S. Department of the Interior Bureau of Reclamation Denver, Colorado • US Navy -Publication Number: TM 5-684/NAVFAC MO 200/AFJMAN 32-1082 recommends an annual inspection. Note: The NUMP, based on the Work Practice #M4-WP-3018 Rev. 1, recommends a 6-month inspection interval, but company experience has proven that a 1-year interval is sufficient for keeping the equipment reliable
Substation Oil Sample Interval – 5Y	Industry experience with Automatic Voltage Regulator performance testing as listed in: • Council Controls Working Group (WG) Recommendations Policy • U.S. Department of the Interior Bureau of Reclamation Denver, Colorado • US Navy - Publication Number: TM 5-684/NAVFAC MO 200/AFJMAN 32-1082 recommends a 5-year oil sampling frequency. The maintenance practice of many other utilities as it pertained to step voltage Regulators were examined to determine the frequency of their oil sampling. The examination revealed that some utilities perform an oil sample every two years, other never performed oil sampling. The manufacturer's instruction states that their Regulator are design for many years of trouble-free operation, without the need for any maintenance, and that maintenance is condition based. One manufacturer went as far as to say their Regulator could possibly function for 20 years without any maintenance. Several manufacturers suggest operation counts in the 100,000-count range as a basis for performing a Major Maintenance. Although each manufacturer states that they do not anticipate the need for frequency maintenance, periodic inspection including oil sampling would help to assure continuity of service. Based on these recommendations and of a review of Eversource's Regulator failure reports, in which no noticeable failures were observed over a five-year period; the 5Y or 50,000 operations count (based on application) oil sampling interval is being established on a Regulators. This replaces the previous 2-year oil sample interval. As data is collected, and examined, this interval may be adjusted.
Infrared Inspection	Infrared inspection is a proven technique for locating "hot spots" on equipment and connections in order to identify conditions that can be corrected before they become serious problems.

EVERSOURCE MAINTENANCE PROGRAM	Document Number: **6.01** **Rev. 4** Document Name: **Voltage Regulators**
Owner Name:	John Dipaola-Tromba
SME Name:	Howard Winslow
Effective Date:	July 1, 2017

Approvals:

Connecticut:

Name: Charles E. Fontenault *Charles E. Fontenault*
Title: Director – Electric Field Operations
Date Signed: **06-27-2017**

Name: Anthony A. Anzalone *Anthony A. Anzalone*
Title: Director – Stations Operations
Date Signed: **06-26-2017**

Massachusetts:

Name: Robert P. Billet *Robert P. Billet*
Title: Director – Station Operations
Date Signed: 06-23-2017

Name: Donald M. Boudreau *Donald M. Boudreau*
Title: Director – Electric Operations
Date Signed: 06-27-2017

New Hampshire:

Name: James C. Eilenberger *James C. Eilenberger*
Title: Director – System Engineering
Date Signed: **06-26-2017**

Name: Marc Geaumont *Marc Geaumont*
Title: Director – Field Operations
Date Signed: 06-23-2017

Ensure you are using the current revision by verifying it against the controlled electronic copy located on the Distribution Engineering Standards Bookshelf or the Regulated Businesses Policies and Procedures Lotus Notes Database.

Voltage Regulator Maintenance Instructions

Before You Begin

1. Ensure that all employees are properly trained and qualified to perform this work; and all appropriate PPE and safety requirements are met, including but not limited to those defined within the following documents:
    - TD 211, “When to Wear FR Clothing”
    - Eversource Employee Safety Manual

Procedure

Routine Inspection - Energized

Substation and Pole-Top

1. Perform touch potential testing on any metal surface that may be accessible to the public.
2. Verify the condition of the primary taps.
3. Verify the bushing condition.
4. Verify the Regulator tank is in satisfactory condition.
5. Check the regulator for any oil leaks or foreign material in the area.
6. Visually check to ensure grounding is properly installed and in good condition
7. Check the condition of the control cabinet for moisture or other problems.
8. Measure regulated voltage at the test terminals to verify correct bandwidth.
9. Check for proper operation of the raise and lower controls.
    - If the regulator will not operate properly, try using a substitute control before removing the unit from service.
    - Refer to the manufacturer's instruction manual for the proper procedures on removing and replacing the control.
10. Verify the tap operations counter is working.
11. Verify and record the tap operations counter and tap indicator readings.
12. If applicable, then verify the Reverse Flow indicator is on.
13. If applicable, then verify the Reverse Flow indicator is operational.
14. Verify the Neutral indicator light is operational.
15. Ensure that all switches are in their normal positions.
16. Reset the Drag Arms.
17. Check to ensure animal guards are present, correctly installed, and in good condition.
18. Properly secure and lock the control cabinet.
19. Use binoculars to view the oil level window, if possible.
20. Inspect the bypass arrester, if present.

Oil Sample – Substation Only

Perform this step once every 5 years for Substation regulators.

NOTE: Only take an oil sample from those regulators that are equipped with an oil level sight gauge and a drain valve.

1. Check the oil level sight gauge and add oil as necessary so that an oil sample can be taken without leaving the regulator oil level too low. When performing this step, be sure to maintain safe working clearances from conductors and other electrical equipment or de-energize and ground the regulator.
   - If it is necessary to add oil before taking a sample, use the pressure relief valve to vent the regulator of positive or negative pressure.
2. Take an oil sample to submit for testing in accordance with TD 202 to ensure compliance with ChemLab requirements.
   - Use the pressure relief valve to vent the regulator of positive or negative pressure before taking the oil sample.
   - If the dielectric strength is found to be below 24 kV, de-energize the regulator, filter or replace the oil, and perform dissolved gas analysis testing to determine the oil's integrity.

Major Maintenance – <u>De-Energized</u>

NOTE: Prior to beginning maintenance, a clearance must be obtained and the respective equipment must be de-energized and grounded in accordance with the applicable company procedure(s)

1. TD 703 – Temporary Protective Grounds for Personnel in Substations
2. TD 855 – Grounding for Personal Protection on Overhead Lines
3. TD 856 – Temporary Protective Grounding for Personal Protection on Overhead Lines, 69 kV and Above

(Regulator bypassed)

Warning: High pressure or mechanical failure due to improper bypass operation can cause death, severe injury or damage. To prevent these consequences, **bypass the regulator only with the regulator on the neutral tap position**.

Warning: Siemens **MJ-X^{L}** controls manufactured prior to August 2005 may have a defect that allows the control to indicate a false position reading. For example, the control may indicate that the switch is in a "manual" position when in reality it is still in "auto" mode. This concerns only the **MJ-X^{L}** control and *not* the **MJ-X** control.

Follow the instructions on page 7 of this section when servicing a regulator equipped with the **MJ-X^{L}** control.

To ensure the regulator is in neutral:

1. Place the volt meter leads into the appropriate receptacles and observe the voltage readings.
2. Observe the voltage readings as you operate the Raise or Lower switch. Operate the regulator until the Indicating Gauge reads neutral, while ensuring the voltage reading is still at appropriate levels.
    - If the control has a Neutral Light, ensure it turns on when the gauge is on neutral. If the light does not turn on, check the bulb and replace it if necessary.

At this point, the indicator position should read neutral *and* the neutral indicator light should be on. If *both* of these conditions are not met, then use an approved regulator neutral tester (Stock Code 519374) as an additional means of neutral verification. See **Over & Under** Issue # 64, dated June '09 or New Hampshire Procedure CO-1040 for details on using this tool. New Hampshire Procedure CO-1040 and Over &Under Issue # 64 are appended to the end of this instruction.

Until there are at least two indications of neutral, DO NOT ATTEMPT to bypass the unit. In such event, de-energize the regulator to remove it from service.

1. De-energize the regulator.
2. Remove the voltage regulator from the pole or pad / platform to perform de-energized maintenance.

CAUTION: When untanking the regulator, be sure to use the proper lifting point, *NOT* the regulator cover.

NOTES:

- All Pole-Top regulators will receive their Major Maintenance at the shop.
- Substation regulators receive their Major Maintenance at the shop except for those units too large to move.
- Untanking the regulator is not to be performed in the field, except for those Substation regulators which are not practical to move due to their size.

3. Untank the regulator.

NOTE: Avoid removing the main core-and-coil assembly from the oil, except when a winding failure occurs. Use blocking between the cover and tank lip to suspend the core and coil assembly within the oil until inspection of the tap changer or other maintenance is complete. If it is necessary to expose the main core and coil to air, follow the manufacturer's instructions before returning the unit to service.

4. Make a thorough inspection of all internal components - particularly noting contact wear, springs, and chain.
    - Determine the remaining contact life by noting the amount of contact erosion which has occurred as compared to the amount of arcing material remaining.
    - When inspecting contact wear, inspect both stationary and movable contacts.
    - Refer to manufacturer's instruction manual for contact wear guidance.
    - Be especially watchful for inadequate contact pressure, unequal pressure on both sides of contacts, contact alignment and carbon formation on any portion of all contact structures.
5. Check for signs of oil leaking from any seal or gasket.
6. Check all chain and gear parts carefully for chipped or broken teeth or excess backlash in its operation.
7. Check all connections for tightness and over heating.
8. Operate the mechanism through its entire range to ensure there is no mechanical interference and that contact alignment is proper on all steps.
9. Adjust the tap changer to ensure it goes through the neutral position.
10. Operate the regulation equipment to the fully raised and the fully lowered positions to check the upper and lower limit switch operation.
11. Ensure the drive mechanism stops properly on position.
12. Check the counter for proper operation.
13. Use clean insulating oil with the proper dielectric strength to refill the regulator.
14. Perform a power factor test (Doble) to determine the insulation integrity of the regulator.
15. Perform an insulation resistance test (megohmmeter).

16. Perform a Transformer Turns Ratio test.
17. Check internal and external motor capacitors.
18. Return the regulator to CMS / DERF Shop for a more thorough repair or disposal if it cannot be made to function within specification.

When the inspection is complete, the unit is ready for service.

Return to Service

The return to service procedure is essentially the reverse of the procedure used to remove the regulator from service. Energize the regulator ***only*** with it on the neutral tap position. See the appended procedure, CO-1040, for details.

Siemens MJ-X^{L} Controls

Use the following procedure when placing an MJ-X^{L} equipped regulator into or out of service. Note that these steps are only for placing the regulator into or out of service. You must still perform the inspection steps, such as the power factor test, TTR, insulation test, etc. that are in the previous section.

Placing the regulator into service:

1. Place the Auto/Manual switch in the Bypass position.
2. Place the Raise/Lower switch in “Off”.
3. Make certain the regulator is in the Neutral (N) position.
4. Turn the Voltage Power Source switch to “Off”.
5. Remove the control power fuse.
6. Close, sequentially, the source and the load switches.
7. Open the bypass switch.
8. Visually observe that the bypass circuit has opened.
9. Replace the control power fuse.
10. Place the voltage power source switch to “Normal”.

Removing the regulator from service:

1. Place the Auto/Manual switch in the Bypass position.
2. Place the Raise/Lower switch in “Off”.
3. Make certain the regulator is in the Neutral(N) position. If independent checks of the position indicator and the neutral light indicator do not confirm the neutral position, bypassing must not be attempted. In such an event, de-energize the system to remove the regulator from service.
4. Turn the voltage power source switch to “Off”.
5. Remove the control power fuse.

6. After ensuring the regulator is in Neutral(N), close the bypass switch.
7. Open sequentially, the load and source switches.
8. Perform the applicable action:
   - For single phase or grounded wye connection, make sure the high voltage disconnect switches are opened.
   - For closed delta connection, ensure all regulators in the bank are bypassed and isolated.
9. Exercise appropriate care in the removal of the regulator. High voltage will still be present at the bypass switch and the source and load switch terminals. Remove the ground connection last.

Summary of Changes

Revision 1 – Effective Date: **July 15, 2011**
Related Feedback – MS-0060, MS-0181, MS-0121

1.	Removed all references to “Critical” regulators.
2.	Added requirement to perform touch potential testing on all metal surfaces that may be accessible to the public.
3.	Deleted Routine Inspection requirements to: • Check for the presence of the PCB label • Record all conditions that require attention into Cascade.
4.	Deleted Major Maintenance requirements to: • Touch up the paint • Record conditions that require attention in Cascade.
5.	SME changed to Andrew Nunes.
6.	Clarified that Major Maintenance is to be performed at the shop for all regulators except for those Substation units that are too large to move.

Revision 2 – Effective Date: **March 31, 2014**
Related Feedback – MS-0307

1.	Changed Approver names on the Signature page, as required
2.	Added the following steps to the routine inspection in response to NSTAR-NUMM Gap Analysis • Condition of primary taps • Bushing condition • Regulator tank condition • Reverse Flow indicator on? • Reverse Flow indicator operational? • Neutral indicator light operational? • Reset Drag Arms

Revision 3 – Effective Date: **July 1, 2015**
Related Feedback – None

1.	Changed names of the Owner, SME, and Approvers on the Signature page, as required.
2.	Incorporated the following global replacements: • NU Maintenance Manual replaced by Eversource Maintenance Program. • CL&P replaced by Eversource Connecticut. • WMECO replaced by Eversource Western Massachusetts. • PSNH replaced by Eversource New Hampshire. • NSTAR replaced by Eversource Eastern Massachusetts. • NUMM replaced by EMP.
3.	Incorporated the following global replacements: • NU Safety Manual replaced by Eversource Employee Safety Manual.

Revision 4 – Effective Date: **July 1, 2017**
Related Feedback – N/A

1.	All stock codes changed to the new Maximo number.
2.	Approvers updated

CO-1040 Voltage Regulators

I. PURPOSE

To establish consistent guidelines when removing Voltage Regulators from the PSNH distribution system.

II. AREAS/PERSONS AFFECTED

- Customer Operations
- Energy Delivery

III. POLICY

When Voltage Regulators are de-energized for service or replacement, or installed for the first time, it is necessary to ensure that there is no difference in potential between the line (source) bushing and the load bushing of the regulator. Therefore, this procedure will be followed to avoid the unsafe condition that is created when de-energizing, and/or installing, regulators that are not proven to be at the same potential on the line and load side of the regulator.

IV. DEFINITIONS

By-Pass Switch - A "make before break" switch used to by-pass and isolate a regulator. When closed, it allows the source side primary tap to become energized and current to flow through the regulator.

Induction Regulator - A regulator that has a stationary outer core and a movable inner core for voltage regulation.

PPE - Personal Protective Equipment

Regulator Neutral Detector - Tool used to ensure that the line side and load side voltage of a regulator have equal potential prior to de-energizing.

RND - Abbreviation for Regulator Neutral Detector.

Step Regulator - A regulator that adjusts voltage in steps (usually 32 - 16 Lower, 16 Raise).

Voltage Regulator - A transformer used to automatically increase or decrease circuit voltage.

V. EMPLOYEE SAFETY & HEALTH HANDBOOK

Yes	Should a copy of this procedure be inserted in the functional area's employee safety & health handbook?

VI. OVERVIEW

When taking a voltage regulator out of service, or placing a new regulator in service, it is critical to be certain that the regulator is in the neutral position. The result of by-passing a regulator one step off the neutral position can be catastrophic due to the high circulating current created. Therefore, two (2) positive indications that the regulator is in the neutral position will be established before by-passing the regulator. The following are neutral indicators: Neutral Light or Position Indicator Gauge, and the Hastings (or equivalent) Neutral Detector. If two (2) positive indications cannot be achieved, an outage must be taken to by-pass the regulator. Also, while only a few may still be in service, an induction regulator that has to be by-passed will require an outage. A proper tailboard conference shall be done with all affected employees utilizing procedures *CO-1066 Tailboard Job Briefings* and/or *ED-3012 Tailboard Conference Plan.* Also, all appropriate PPE shall be used.

Before installing or removing a regulator, it is important to remove/insert the plug in the breather. This plug is required for transporting the regulator to avoid an oil spill during shipping.

VII. PROCEDURE

A. Disabling Automatic Control

RESPONSIBILITY		ACTION
Working Foreman-Line, Working Foreman-Field Electrician, Craftworkers	1.	At the control panel, switch the toggle switch from "Automatic" to "Manual".

B. Placing the Regulator to the Neutral Position

RESPONSIBILITY		ACTION
Working Foreman-Line, Working Foreman-Field Electrician, Craftworkers	1.	Place volt meter in the appropriate receptacles and observe voltage on meter, or if regulator control has digital voltage screen, observe voltage on screen.
	2.	By manipulating the "Raise" or "Lower" switch, operate the regulator until the dial on the Indicating Gauge reads neutral, making sure the voltage reading is still at appropriate levels. If the control has a Neutral Light, observe the light to see if it comes on when gauge is on neutral. If light does not come on, check to see if bulb is good. Replace bulb if necessary.
	3.	Use the Hastings (or equivalent) Neutral Detector to achieve the second indication.
	4.	Once the regulator is in neutral position, turn off control power.

C. Using the Hastings Regulator Neutral Detector

RESPONSIBILITY		ACTION
Working Foreman-Line, Working Foreman-Field Electrician, Craftworkers	1.	When using the Hastings Neutral Detector, follow these instructions which have been taken from the Hastings - "Instructions for the Regulator Neutral Detector" (RND).

Hastings Neutral Detector (Catalog # 6709-1)

Do Not:

★ Use on system voltages above 35Kv phase to phase.
★ Make contact between either of the phase conductors and the neutral.
★ Allow only one side of the probe of the unit bridge the gap between any of the conductors or between the conductors and ground.

This Unit Must:

★ Be used in conjunction with an insulated hot stick.
★ The hot stick must be able to maintain adequate clearances.
★ Be considered conductive.

Instructions:

Prior to testing, the conductors at the regulator must be identified. The RND is designed to test the voltage difference between the Source and Load conductors only. Contact with other conductors can result in a phase to ground fault. This unit has a timer that will automatically shut off the unit after 10 minutes. The power switch has one (1) momentary position (power) and two (2) operating positions (no light, light). Pushing the switch to "power" will turn on the unit, once the unit is on, pushing the switch in the opposite direction will turn on the light. The timer is reset by the momentary switch activation and when a reading other than "0" is taken. For manual shutdown, hold the switch in the "power" position for more than two (2) seconds and release it. Battery life is approximately 40 hours without the light and 4 hours with the light. The letters "BAT" appearing in the upper left hand corner of the display indicates low battery condition. When this occurs, the battery must be replaced.



★ Extremely cold conditions may affect the performance of the RND and the battery. The RND should be stored in a location where the temperature will not be below -20º C (-4º F).

- ★ The RND has encapsulated resistors in the molded end between the electrodes. These are rated for 2000 volts between the electrodes. This is the maximum voltage difference that should appear on a 34.5 Kv regulator at the extreme end of its adjustment. The current flowing through the RND at 2000 volts is .001 amperes. This current is then measured to determine the voltage difference between the load and source. The RND does not indicate whether the load voltage is higher or lower than the source, only the difference.
- ★ Voltage steps of some common size regulators are listed in these instructions for reference (see appendix). It should require only one (1) step change of the regulator to determine if the regulator is moving closer to, or further away from its neutral position.
- ★ The RND must be placed only between the Source and Load conductors of the regulator, in a position away from ground potential. On heavily oxidized conductors, it may be necessary to rub the electrode and conductor together to get a good contact. **Failure to make a sufficiently low resistance contact will result in a slight reading, instead of "0", when in the neutral position.** If this is suspected, try additional rubbing or move to a different location on the conductors to find a better contact point.
- ★ After observing the initial reading, the regulator should be stepped once in the direction that the operator thinks is toward neutral, based on the regulator indicator and knowledge of the system. Another reading should then be taken with the RND. If this reading is lower than the first, the direction taken was correct. The difference between the first and second is the amount of regulation available in each step. Based on the chart, (see appendix) you can tell exactly how many steps are required to reach the neutral position. The regulator can then be operated the required number of times, checking the regulator periodically until neutral is reached.
- ★ The regulator should be checked at the completion of any adjusting of the steps to verify it is in the neutral position. The neutral position will be the position in which the lowest reading will be obtained. **The meter may not indicate "0" on a loaded regulator due to the electric field.** The reading should be less than 5 volts when the regulator is in the neutral position. If the regulator cannot be stepped to both sides of neutral (for verification of the neutral position), or if it appears that the regulator stuck between steps, the line should be de-energized before the regulator is by-passed.

Summary of Operating Instructions:

1. Install RND onto an approved and tested hot stick.
2. Identify source and load bushings/conductors.
3. Take initial reading between source and load conductors.
4. Operate regulator one (1) step (up or down).
5. Take second reading. Note voltage change.
6. Adjust regulator to achieve lowest reading on RND.

The neutral position may indicate voltage greater than zero (0). This can be caused by a poor connection between the RND and the conductors. Readings of less than five (5) volts should always be obtainable by rubbing the conductor with the electrodes to improve the contact. If a voltage of more than five (5) volts is the lowest obtainable, DO NOT attempt to switch the regulator.

D. Open the By-Pass Switch

RESPONSIBILITY		ACTION
Working Foreman-Line, Working Foreman-Field Electrician, Craftworkers	1.	Utilizing proper PPE, it is now safe to open the by-pass switch and remove the switch taps with hot stick methods.

E. Installing a Regulator

RESPONSIBILITY		ACTION
Working Foreman-Line, Working Foreman-Field Electrician, Craftworkers	1.	Establish an insulated separation of the line, via an inline polymer insulator, or double dead end. However, this separation should have a jumper installed across it, at this juncture.
	2.	Install Regulator into position per Overhead Standards, and install by-pass switch.
	3.	Install tap wire into the bottom of the by-pass switch.
Field Electrician	4.	Connect control panel wiring.
Working Foreman-Line, Working Foreman-Field Electrician, Craftworkers	5.	Install line taps on the by-pass switch using live line tool methods. Install the load side tap onto an insulated stand-off, and then install the line side directly onto the line. The by-pass switch should be in the closed position.
	6.	Ensure the manual switch is in the on position in the control box. Exercise the regulator to both ends of the raise and lower scale. Establish the neutral position, and check to ensure the neutral light is on.
	7.	Double check the Regulator is in the neutral position, by using the Hastings Neutral Detector, as outlined in the procedure above.
	8.	Open the by-pass switch, and install the load side tap (that was on the insulated stand off) onto the line. **Note:** Be sure that the control box is still in the manual position.
	9.	Remove the jumper that had been placed across the insulated opening described in Step 1 of this process. Remove/insert the plug in the breather.

RESPONSIBILITY		ACTION
Working Foreman-Line, Working Foreman-Field Electrician, Craftworkers (continued)	10.	Close the by-pass switch using Live Line Tool Methods. Worker must use the following PPE: A. Hard hat B. Hearing Protection C. F/R Hood D. Faceshield E. Safety Glasses F. Class II Rubber Gloves G. F/R Clothing
	11.	Place the control to the automatic position.

VIII. CO-1040 REVISION HISTORY

Revision Number	Date	Reason
Rev 0	02/9/04	Original issue
Rev 1	05/17/06	Updated Section IV. Definitions, By-Pass Switch
Rev 2	03/4/08	Updated Section VI. Policy – changed the words "removed from service" to "by-passed". Added Revision History section.
Rev 3	02/12/10	Changed name of procedure from "Taking Voltage Regulator Out of Service" to Voltage Regulators. Added Section VII. E. Installing a Regulator.

IX. APPENDIX

EXPECTED VOLTAGE STEPS WITH COMMON PSNH VOLTAGE REGULATORS

		2400	7200	19900
	16	240	720	1990
	15	225	675	1866
	14	210	630	1741
	13	195	585	1617
	12	180	540	1493
	11	165	495	1368
	10	150	450	1244
R	9	135	405	1119
E	8	120	360	995
G	7	105	315	871
U	6	90	270	746
L	5	75	225	622
A	4	60	180	498
T	3	45	135	373
O	2	30	90	249
R	1	15	45	124
	N	0	0	0
S	1	15	45	124
T	2	30	90	249
E	3	45	135	373
P	4	60	180	498
S	5	75	225	622
	6	90	270	746
	7	105	315	871
	8	120	360	995
	9	135	405	1119
	10	150	450	1244
	11	165	495	1368
	12	180	540	1493
	13	195	585	1617
	14	210	630	1741
	15	225	675	1866
	16	240	720	1990

Issue 64 *June 2009*

OVER&UNDER

A News and Information Update for Overhead and Underground Distribution Standards • Northeast Utilities

Streetlights – Conversion to Pulse Start Technology

Traditional metal halide (MH) streetlights, floodlights, and spot lights use probe–start lamps and ballasts. New fixtures, from 150 watts through 500 watts, containing probe start lamps and ballasts are no longer being produced due to President Bush signing H.R. 6, the Energy Independence and Security Act of 2007, into law (Public Law 110–140) on December 19, 2007. As of January 1, 2009, manufacturers discontinued production of fixtures containing probe start technology and replaced it with pulse start technology. At this time, manufacturers say probe start lamps will be commercially available indefinitely.

For ease of identification, new pulse start fixtures will have a circled capital E like this, Ⓔ

in a visible spot. Otherwise, pulse start and probe start lamps look very similar to each other. Except for this symbol, there is no easy way to distinguish between probe start and pulse start lamps once they are out of the packaging. *Please note that the new pulse start lamps must never be installed in a fixture that contains a probe start ballast.* Mismatching a probe start ballast to a pulse start lamp may result in early burnout. Philips says they are coming out with a MH lamp that will work on either ballast in September of this year. At that time, Standards and the three electric operating companies will evaluate the lamp.

Basic Technical Differences Between The Two Technologies

Three electrodes are present in the arc tube of a probe–start MH lamp; a starting probe electrode and two operating electrodes (see Figure 1). To start the lamp, an electrical discharge is created across a small gap between the starting probe electrode (also called the starter electrode) and the operating electrode. Electrons then jump across the arc tube to the other operating electrode to help start the lamp. Once the lamp is started, a bi–metalic switch removes the starting probe electrode from the circuit. Each time a MH lamp is turned on, tungsten sputters from the electrodes. Over the lamp life, this tungsten can cause the arc tube wall to blacken, thus reducing performance of the lamp.

A pulse–start MH lamp does not have a starting probe electrode. Instead it has a high–voltage igniter that works with the ballast to start the lamp using a series of high–voltage pulses (typically 3 to 5 kilovolts). Without the probe electrode, the amount of pinch (or seal) area at the end of the arc tube is reduced, which results in a reduced heat loss. While there is a higher voltage present in a pulse start lamp and ballast, it is approximately equal to the voltage in a high pressure sodium fixtures.

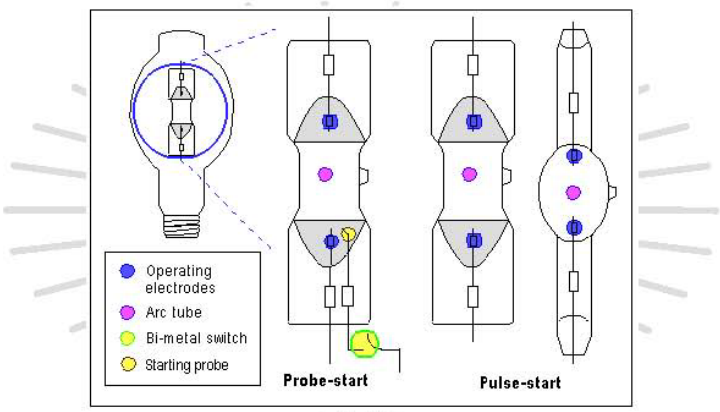

Figure 1

Manufacturers claim the following advantages of pulse–start over probe start systems:

- Longer lamp life
- Increased lumen output per watt of input
- Better lumen maintenance meaning lumen output over the life of the lamp degrades less
- Better cold starting capability. These lamp–ballast systems will start at temperatures as low as –40° F
- Faster Warm–Up. Warm–up time is approximately 2 minutes for pulse start systems versus 10–20 minutes for probe start
- Faster Restrike. Restrike times after an outage are reduced to 3 to 4 minutes for pulse start lamps

MIMs: This table summarizes stock codes of Standards approved probe start fixtures and lamps, and the pulse start replacements.

Existing Probe Start Fixtures and Lamps.							Replacement Pulse Start Fixtures and Lamps					
Description	NU Fixture S/C	GE Fixture Model #	NU Lamp S/C	Lamp Manufacturer	Lamp Model #	Initial lumens per lamp (1)	NU Fixture S/C	GE Fixture Model #	NU Lamp S/C	Lamp Manufacturer	Lamp Model #	Initial lumens per lamp (1)
Full Cutoff-Streetlight (175W)	405063	M2RC17M1A2GSC2	405238	GE	MVR175/U	11700	449095	M2RC17E1A2GSC2	449100	Philips	MS175/HOR/PS	12800
				Sylvania	M175/U	12800				Sylvania	M175/PS/U	12800
Semi Cutoff-Streetlight (175W)	405046	M2RR17M1A2GMS3	405238	GE	MVR175/U	11700	449096	M2RR17E1A2GMS3	449100	Philips	MS175/HOR/PS	12800
				Sylvania	M175/U	12800				Sylvania	M175/PS/U	12800
Post top, Contemporary (175W)	405051	P17M17M1A2AMN3GR010	405238	GE	MVR175/U	11700	448452	P17M15P1A2AMN3GR010	448453	Philips	MS175/HOR/PS	12800
				Sylvania	M175/U	12800				Sylvania	M175/PS/U	12800
Semi-Cutoff Streetlight (250W)	405048	M2RR25M1A2GMS3	405243	GE	MVR250/U	19100	448436	M2RR25E1A2GMS3	448424	GE	MVR250/HOR/PA	20000
				Sylvania	M250/U	20000				Sylvania	M250/PS/U	19000
Full Cutoff-Streetlight (400W)	405085	MSCL40M1A21FMC3	195417	GE	MVR400/U	33100	448440	MSCL40E1A21FMC3	448427	GE	MVR400/HOR/PA	40000
				Sylvania	M400/U	32000				Sylvania	M400/PS/U	31000
Semi Cutoff-Streetlight (400W)	405049	MSRL40M1A21RMS3	195417	GE	MVR400/U	33100	448441	MSRL40E1A21RMS3	448427	GE	MVR400/HOR/PA	40000
				Sylvania	M400/U	32000				Sylvania	M400/PS/U	31000
Flood (175W)	405023	PF4S17M1A26X6GR	405238	GE	MVR175/U	11700	449099	PF4S17E1A26X6GR	449100	Philips	MS175/HOR/PS	12800
				Sylvania	M175/U	12800				Sylvania	M175/PS/U	12800
Flood (250W)	405026	PF4S25M1A26X6GR	405243	GE	MVR250/U	19100	448442	PF4S25E1A26X6GR	448424	GE	MVR250/HOR/PA	20000
				Sylvania	M250/U	20000				Sylvania	M250/PS/U	19000
Full Cutoff Flood (250W)	436664	GFPS25M1A26X6GR125	405243	GE	MVR250/U	19100	448393	GFPS25E1A26X6GR125	448424	GE	MVR250/HOR/PA	20000
				Sylvania	M250/U	20000				Sylvania	M250/PS/U	19000
Floodlight (250W)	405074	M2RC25M1A2GSC3	405243	GE	MVR250/U	19100	448438	M2RC25E1A2GSC2	448424	GE	MVR250/HOR/PA	20000
				Sylvania	M250/U	20000				Sylvania	M250/PS/U	19000
Full Cutoff Flood - Compact lamp (400W)	436667	GFPS40M1A26X6GR125	406616	GE	MVR400/U/ED28	33100	448390	GFPS40E1A26X6GR125	448425	GE	MVR400/HOR/ED28PA	38000
				Sylvania	M400/U/BT-28	32000				Sylvania	(2)	
Flood (400W)	180442	PF4S40M0A27X6GR	195417	GE	MVR400/U	33100	448443	PF4S40E0A27X6GR	448427	GE	MVR400/HOR/PA	40000
				Sylvania	M400/U	32000				Sylvania	M400/PS/U	31000
Flood (400W)	405027	PF4S40M1A27X6GR386	195417	GE	MVR400/U	33100	448350	PF4S40E1A27X6GR386	448427	GE	MVR400/HOR/PA	40000
				Sylvania	M400/U	32000				Sylvania	M400/PS/U	31000
WallLighter (175W)	408100	W4L17M1A2SN4GR	405238	GE	MVR175/U	11700	(3)	(3)	(4)	GE	(4)	(4)
				Sylvania	M175/U	12800				Sylvania		
WallLighter (175W)	408117	W4L25M1A2SN4GR	405243	GE	MVR250/U	19100	448451	W4L25E1A2SN4GR	448424	GE	MVR250/HOR/PA	20000
				Sylvania	M250/U	20000				Sylvania	M250/PS/U	19000
Spot (400W)	408933	PSFA40M1A11HD2	195417	GE	MVR400/U	33100	448455	PSFA40E1A11HD2	448427	GE	MVR400/HOR/PA	40000
				Sylvania	M400/U	32000				Sylvania	M400/PS/U	31000
Spot (400W)	408925	PSFA40M1A14HD0	195417	GE	MVR400/U	33100	448456	PSFA40E1A14HD0	448427	GE	MVR400/HOR/PA	40000
				Sylvania	M400/U	32000				Sylvania	M400/PS/U	31000
Turnpike Fixture (400W)	407950	RPFS40M1A2GMN2GRK	195417	GE	MVR400/U	33100	448457	RPFS40E1A2GMN2GRK	448427	GE	MVR400/HOR/PA	40000
				Sylvania	M400/U	32000				Sylvania	M400/PS/U	31000

(1) Horizontal mount
(2) Not offered by manufacturer at this time.
(3) GE does not make an equivalent fixture in pulse start at this time.
(4) Lamp cannot be selected

Tino Dangelo x703–5420

Using a Bypass Switch to Energize or De–Energize a Voltage Regulator

Caution! A voltage regulator must be in the neutral position and any jumpers across the source and load side of the regulator must be removed before the regulator is moved from the neutral position or catastrophic damage to the equipment and a life threatening situation can result.

- There are several methods of checking a regulator's position prior to opening or closing a bypass switch.

- Replacement or new regulators are tested using a TTR and placed in the neutral position at the area work centers. Make certain that the dial indicator shows the regulator in the neutral position and the control is placed in the manual and off position. In addition the control panel fuse should be removed.
- If bypass switches are installed on a new or existing installation, make certain that any taps or jumpers that are placed over the in–line insulators during construction between the source and load sides of the regulator are removed. Once the top leads of the bypass switch are installed, the open bypass switch automatically jumpers the line which will allow current to flow through the top of the switch and physical jumpers are no longer required. It is imperative that jumpers are removed prior to the regulator being energized by physically closing the bypass switch.
- Bypass switches that are being closed to energize a regulator in the neutral position must be closed firmly. Inspect the top of the bypass switch once the switch is closed to insure that the top contacts which jumper the switch to allow circuit continuity are fully open. If there is any doubt, open the switch and close the switch again. Visually inspect the top jumpering contacts. If there is any question as to the bypass jumpering contacts being open, stop the job. Failure of the contacts to open can cause a short circuit situation if the regulator is moved from the neutral position.
- Existing energized regulator installations can be removed from service safely by utilizing the following tools, check that the neutral indicator light is on, check that indicator dial is at zero, reset drag hands, and test with a Regulator Neutral Detector Tool (SC0188570). The tool and the regulator can both be verified by placing the leads of the tool between the source and load side leads of the regulator. If the unit is squirrel–guarded the tester can be used between the leads. Check the position of the regulator, raise or lower the regulator and measure the voltage across the source and load leads. The potential measured using the Regulator Neutral Detector Tool should be zero when in the neutral position. Turn the control to manual and off and remove the control panel fuse so the regulator will remain in the neutral position.
- If the regulator is in any position other than neutral and cannot be moved to the neutral position, the regulator and bypass switch must be de–energized from another isolating device such as a cutout or recloser before opening the bypass switch.
- Never use a collapsible switch stick to open or close regulator bypass switches, since they must be open and closed firmly. A collapsible switch stick has too much flexibility; a rigid switch stick must be used. Make certain that all PPE is used and nearby conductors and equipment should be appropriately covered when operating a bypass switch.

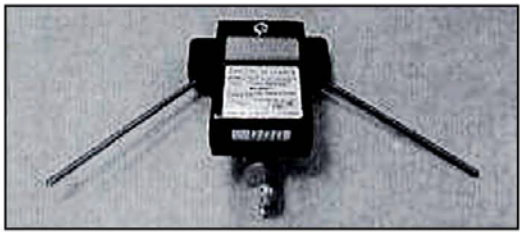



Regulator Neutral Detector Tool SC0188570

Contributed by: Bill Olexa (Torrington Chief Electrician)

CATV Grounding

Many CATV installations have problems with grounding. These problems may occur primarily because of a misunderstanding of the grounding principles; grounding vs. bonding, or there is a conflict between issues of safety (grounding to prevent electrical shock) and electronic noise reduction (using "ground" as an electronic "dump" for noise and interference). These two uses are often not compatible and can be in direct conflict with one another. The ultimate purpose of a good grounding scheme is the preservation and adherence to the safety aspects while obtaining the maximum noise reduction possible. Within the United States, nearly every state and most local governments have adopted the National Electrical Code, commonly referred to as the NEC, and is published by the National Fire Protection Association as the local electrical code.

Articles 820 and 830 of the NEC deal with various cable drop (installation) issues. Included in these two Articles, at NEC 2002 sections 820.40 and 830.40

[NEC 2008 sections 820.100 and 830.100], are the requirements for "cable grounding" of the drop.

NEC 2002 [820.33] states "Ground the metallic sheath of coax to the earth (electrode) as close as practicable to the point of entrance to the building or structure." Usually, there are at least three utility grounded cables connected to a typical business/residence. (See Figures 1 & 2). The first is the electric utility, the second is the telephone company, and third is the coaxial cable TV. When NEC section 820 and 830 states "Ground the metallic sheath of coax to the earth (electrode) as close as practicable to the point of entrance," it doesn't mean that CATV should drive a separate electrode. The practice of driving a ground rod at a convenient location and not bonding that ground rod to the power grounding electrode system is not permitted. As the 820.33 FPN explains, one purpose of 820.33 is to limit the potential differences between CATV, and other metallic systems. Therefore, the CATV coax shield should be connected to the main grounding system. If there is a separate grounding electrode for the CATV it should be bonded to the power grounding electrode system with a conductor no smaller than 6 AWG.

Wherever multiple systems touch, and where those systems are not at a common ground potential (i.e., they are not bonded), then electric current can flow and it seeks a way to return to the ground point via the path of least resistance. This condition can create shock and fire hazard that can easily destroy equipment connected to multiple systems (i.e., computer, CATV, and phone). However, the most consequential is signal degradation due to power quality issues, which results in customer service complaints and numerous trouble calls to NU. This is a major operational expense that is unrelated to NU distribution electrical supply, but is directly related to poor, or lack of, CATV grounding.

A key aspect of Telecommunications Services Act is the provision that the services are provided in a safe and reliable manner. However, a high proportion of the customer installations inspected were not compliant with the NEC as defined above, particularly its requirements for bonding and grounding. In several NU trouble calls, it was determined that the issue was "ground loop" condition. Ground loop is a condition where an unintended connection to ground is made through an interfering electrical conductor. Generally a ground loop condition exists when an electrical system is connected through more than one way to the electrical ground. These installations were not in compliance with the NEC. Code compliance is essential to providing safe and reliable service to the customer premises. There is a certain amount of resistance to electrical current between all grounding points. This resistance can change with humidity, temperature, connected equipment, and many other variables. No matter how small, the resistance can always allow an electrical voltage to exist across it when there is any current flowing between those grounding points. As a result, ground loop condition can be intermittent and sometimes difficult to identify. CATV ground loop conditions are unacceptable under the NEC. CATV ground loops constitute a potential safety hazard, are frequent contributors to power quality problems, can significantly impact the operation of sensitive equipment and should be brought to the attention of CATV providers.

CATV drop installation may be unique; however here are some useful steps to be performed by troubleshooters responding to power quality issues related to CATV:

- Find the signal tap for the address
- Look for a legal grounding point (See Fig. 1 & 2), usually at or adjacent to the electrical service meter.
- If CATV is bonded to NU down ground at the pole, but is not bonded to a common ground at the service entrance, remove CATV ground from NU pole down ground.
- If CATV is improperly grounded ask your supervisor to notify CATV provider.

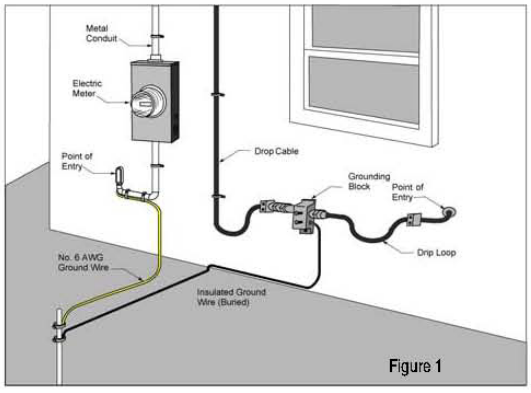

Figure 1

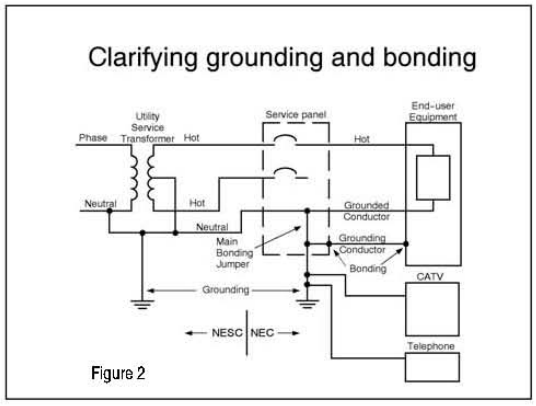

Figure 2

Send your comments or requests to Joe O'Sullivan, Assistant Manager–Distribution Engineering & Design (mailstop NUE2, 860–665–3202)

APPENDIX 9

RECLOSERS AND SECTIONALIZERS

EVERSOURCE MAINTENANCE PROGRAM	Document Number: **5.44** **Rev. 4** Document Name: **Reclosers & Sectionalizers**
Owner Name:	Henry J. Matuszak
SME Name:	Timothy J. Callahan
Effective Date:	July 1, 2015

Approvals:

Connecticut:
Name: Jeffrey S. Franson _____
Title: Director – Substation Operations
Date Signed: **5-24-2015**

Name: Charles E. Fontenault _____
Title: Director – Division Operations
Date Signed: **5-19-2015**

Eastern Massachusetts:
Name: Donald M. Boudreau _____
Title: Director – Electric Operations
Date Signed: 5-22-2015

Name: Robert P. Billet _____
Title: Station Operations
Date Signed: 5-16-2015

New Hampshire:
Name: James C. Eilenberger _____
Title: Director – Energy Delivery
Date Signed: **5-19-2015**

Name: Marc Geaumont _____
Title: Director – Customer Operations
Date Signed: **5-20-2015**

Western Massachustts:
Name: Robert S. Coates _____
Title: Vice President – Electric Field Operations
Date Signed: **5-11-2015**

Name: Bliss A. Young _____
Title: Director – Operations
Date Signed: **5-14-2015**

Signatures continue on the next page.

Operations Services:
Name: Michael G. Waggoner
Title: Director – Engineering Services
Date Signed: **5-15-2015**

Ensure you are using the current revision by verifying it against the controlled electronic copy located on the Distribution Engineering Standards Bookshelf or the Regulated Businesses Policies and Procedures Lotus Notes Database.

5.44 Automatic Circuit Reclosers (ACR) & Sectionalizers

General Description

Reclosers sense and interrupt fault currents and automatically restore service after momentary outages. The automatic circuit recloser is essentially a self-contained device with the necessary intelligence to sense overcurrents, to time and interrupt fault currents, and to re-energize the line by reclosing automatically. If a fault is permanent, the recloser locks open after a preset number of operations, isolating the faulted section from the main part of the system. Automatic circuit reclosers installed at Eversource:

- Can be either Single-phase or Three-phase
- Can have either Oil or Vacuum Interrupters
- Can have either Hydraulic or Electronic Controls
- Can be either Oil or Epoxy Insulated

Single-phase reclosers are used to protect single-phase lines such as branches or taps of a three-phase feeder. They can also be used on three-phase circuits where the load is predominantly single phase.

Single phase reclosers installed at Eversource include (not a complete list) Type H, 4H, V4H, L, V4L, VXE15, D, E, 4E, V4E, and DV. (See Appendix 2.)

Three phase reclosers are used in multiple applications: As main feeder breakers at the substation source, as sectionalizing and tie devices with over current protection within auto loops; and for over current protection on major three phase laterals. Reclosers within auto loops operate based on local current and voltage sensing to resectionalize circuits to limit the number of customers interrupted by a fault on a circuit backbone. The majority of three phase reclosers are monitored as part of the DSCADA System, providing remote control and data acquisition capability.

Three phase reclosers installed at Eversource include (not a complete list) Type 6H, V6H, W, WE, VWE, WVE27, VWVE27, NOVA27, WVE38X, VWVE38X, VSO12, and NOVA38. (See Appendix 2.)

Recloser Controls provide the intelligence that enables a recloser to sense over-currents, select timing operation, time the tripping and reclosing functions, and finally lockout the circuit when required. There are two basic types of controls used: an integral hydraulic control or an electronic control located in a separate cabinet.

- **Hydraulic recloser controls** are used in most single-phase reclosers and in three-phase recloser types 6H, V6H, and W. The controls are an integral part of the recloser. With this type of control, an over-current is sensed by a trip coil that is connected in series with the line.
- **Electronic recloser controls** are used in most three-phase reclosers and in the single-phase Cooper recloser types VXE and NOVA.

5.44.1 Inspection and Maintenance Schedules

Table 1 –Recloser Maintenance Intervals

Recloser Maintenance Schedule	**Contacts in Vacuum**	**Contacts in Oil**
Time-Directed Maintenance		
Check – Energized S/S	1M	1M
Check – Energized (SCADA) – Pole Top (**Note 1**)	1Y	1Y
Check – Energized (Non-SCADA) Pole-Top Electronic	2M	2M
Check – Energized Pole-Top Hydraulic	1Y	1Y
Inspection – Energized (Infrared)	1Y	1Y
Major Maintenance – De-Energized (**Note 4**)	N/A	12Y
Condition-Based Maintenance		
Major Maintenance – Triggered by Contact Life or Duty Cycle. (**Note 2**)	≥ 95%	≥ 95%
Major Maintenance – Triggered by Fault Operations	200	N/A
Major Maintenance Evaluation– Triggered by Operations Count. (**Note 3**)	N/A	100
Scheduling Requirements		
Schedule maintenance of the attached Potential Transformer at the same time as the recloser, if applicable.		

In **Table 1**, the type of maintenance is listed in the left column and the interval required for that type of maintenance is listed in the right column. For example, the interval for an **Energized Check** for Substations is 1M (or 1 month). The abbreviations used for the intervals are:

A/R = As Required

M = Month, i.e. 1M = 1 Month

Y = Year, i.e. 2Y = 2 Years

Note 1 – SCADA Pole Top reclosers are monitored continuously and do not require the monthly checks. They will be inspected for physical damage on an annual basis.

Note 2: Duty cycle is calculated based on the number and magnitude of fault interruptions. The duty cycle is calculated and monitored by all electronic controllers (except Form 3A). This is equivalent to the contact life that has been consumed.

Note 3: Use the operations count for Hydraulic controls and Form 3A controls.

Note 4: Scheduled Major Maintenance for oil filled Reclosers may be deferred if a capital replacement project has been formally established and is being implemented on a 12 year replacement plan

5.44.2 S/S Reclosers – SCADA Monitored/Controlled

See EMP Instruction 6.44 for details on performing the following maintenance activities.

5.44.2.1 Check and Inspection – Energized – Monthly

5.44.3 S/S Reclosers – Non-SCADA

ELECTRONIC

5.44.3.1 Check and Inspection – Energized – Monthly

HYDRAULIC

5.44.3.2 Check – Energized – Annually

5.44.4 Pole–Top Reclosers – SCADA

5.44.4.1 Check and Inspection – Energized – Annually

5.44.5 Pole-Top Reclosers – Non-SCADA

ELECTRONIC

5.44.5.1 Check – Energized – Every Two Months

HYDRAULIC

5.44.5.2 Check – Energized – Annually

5.44.6 Recloser – All – Major Maintenance – De-Energized (triggered by fault operations)

5.44.6.1 Vacuum Under Oil Device

5.44.7 Major Maintenance Evaluation (triggered by operations count)

5.44.8 Sectionalizers (SEC3) and Voltage Switches (VS)

General Description

The importance of following a strict maintenance program on sectionalizers cannot be over-emphasized. The nature of these devices is such that they operate primarily during times of emergency. It is their function to limit service interruptions on permanent faults to a relatively small group of customers. Failure to operate properly increases the cost and time required to restore service following an emergency and reduces the system reliability.

Sectionalizers are used with reclosers and reclosing circuit breakers to isolate permanent faults and confine outages to smaller sections of line on electric power distribution systems. They are applied on the load side of the fault-interrupting device, and can be set to trip and lockout during the first, second, or third open interval of the recloser or breaker. They are not rated to interrupt fault current; however, they can safely be closed into a fault, and can interrupt load current.

Voltage Switches (VS) are those reclosers that are used as sectionalizers. Their trip settings are so high they will never trip for fault current before upstream protective devices operate. Because of the “lighter duty” service they perform, they are maintained to the same schedule as regular sectionalizers. When a recloser is used as a VS, it shall be maintained as a recloser.

Table 2 – Pole-Top Sectionalizer Maintenance Intervals

Pole-Top Sectionalizer & VS Maintenance Schedule	**Sectionalizer Type**	
	Electronic	**Hydraulic**
Interval-Based Maintenance		
Check – Energized – 3 Phase	4M	N/A
Check – Energized – Single Phase	1Y	1Y
IR Inspection – Energized	1Y	1Y
Major Maintenance – De-Energized	6Y or A/R	6Y or A/R

In **Table 2**, the type of maintenance is listed in the left column and the interval required for that type of maintenance is listed in the right column. For example, the interval for an IR Inspection for a **Sectionalizer** is **1Y** (or 1 Year). The abbreviations used for the intervals are:

Y = Year, i.e. 2Y = 2 Years

M = Month, i.e. 1M = 1 Month

A/R = As Required

5.44.9 Pole-Top Sectionalizers and Voltage Switches (VS)

See EMP Instruction 6.44 for details on performing the following maintenance activities.

5.44.9.1 Sectionalizer and VS – Check – Energized

5.44.9.2 Sectionalizer and Voltage Switch IR Survey Inspection

5.44.9.3 Sectionalizer and VS Major Maintenance – De-Energized

5.44.10 Failure Finding

Failures of reclosers and sectionalizers shall be documented in the equipment failure reporting system used by your region (EFRS, UPER, or Cascade, as appropriate).

5.44.11 Recloser Maintenance Basis Documentation

The maintenance activities and their schedules are based on industry Standards, manufacturer's recommendations, and Field experience.

Requirement	Basis
Check – Energized – Substation & Pole-Top Non-SCADA Electronic Reclosers – 2M **SCADA and Hydraulic Pole-Top Reclosers – 1Y** **Major Maintenance (Oil) – 12Y and (Vacuum) – N/A**	The Industry Standards recommend more frequent inspections, testing, and maintenance than our Company has followed, but they also state that operating experience should govern the maintenance plan. The sources of information we can draw on include: • IEEE Std 321-1973 "IEEE Standard Guide for the Application, Operation, and Maintenance of Automatic Circuit Reclosers" • ANSI Std C37.61-1973. • Manufacturer's Literature • Our Operating Experience and Maintenance records All sources indicate that periodic inspections should be performed to look for oil leaks, check for cracked or broken bushings. Currently, Time-Directed maintenance is the standard used at Eversource. The intervals for Time-Directed maintenance may be affected by weather conditions.
Condition–Based Maintenance (CBM) **(Oil) – 100 Operations** **(Vacuum) 200 Fault Operations** **Major Maintenance Evaluation**	CBM for reclosers is based on: The number of operations or duty cycle. A combination of CBM and Time-Directed Maintenance is recommended by the ANSI/IEEE and the Manufacturer as it accounts for both the activity level of the recloser and the time-based requirements of the oil. Accurate and complete inspection findings, such as op counts and oil level and condition must be maintained in order to develop cost-effective maintenance plans that will keep Eversource's equipment in reliable condition. This will be performed based on discussion with the EMP Working Group.
Sectionalizers • **Check – Energized – 3 Phase – 4M** • **Check – Energized – Single Phase – All – 1Y** • **Major Maintenance – 6Y or A/R**	Sectionalizers are few in number and are scheduled to be phased out over time. The maintenance schedule will remain unchanged.

5.44.12 Appendix 1

5.44.12.1 SCADA Recloser Capabilities

The following table lists the currently used SCADA-capable Reclosers and the functions they can monitor.

SCADA Recloser Monitoring Capabilities	Siemens Advanced	Siemens Centurian	Cooper Form 6	Cooper 4c with PoleCAT
Battery Status (high/low vtg, off, etc.)	C	C	C	C
Capacitor Charge Status	C	C	N/A	N/A
Low Power Mode	C	C	N/A	N/A
Mechanism Failure	C	C	C	C
AC Power	C	C	C	N/A
System Alarm	N/A	N/A	C	N/A
RAM/ROM/EPROM Failure	N/A	N/A	C	C
Power Down Time	N/A	N/A	N/A	C

Abbreviations used in this table are:

C = Continuous

N/A = Not Applicable

Summary of Changes

Revision 1 – Effective Date: **December 5, 2011**
Related Feedback: MS-0148 and SS WG minutes of 05/10/12

1.	Changed Approver names on the Signature page, as required.
2.	Changed Infrared Inspection from Time-Directed to Condition-Based for Reclosers and Sectionalizers
3.	Added reference to NUMM Chapter 5.22 – IR Inspection

Revision 2 – Effective Date: **January 1, 2013**
Related Feedback: MS-0148, 0212, and SS WG minutes of 05/10/12

1.	Added scheduling requirement to maintain attached Potential Transformer at the same time as recloser maintenance, as applicable.
2.	Changed Approver names on the Signature page, as required.
3.	Change SME to Alyne Silva.
4.	Deleted detail steps as they are now included in Instruction 6.44.
5.	Deleted Major Maintenance – De-Energized for Vacuum Reclosers
6.	Extended Major Maintenance – De-Energized for Oil Reclosers to 12 years
7.	Deleted Major Maintenance – Triggered by Fault Operations for Oil Reclosers
8.	Required Major Maintenance evaluation for Oil Reclosers following 100 operations
9.	Clarified limit for Major Maintenance Triggered by Contact Life or Duty Cycle
10.	Deleted paragraph 5.44.6.2 Major Maintenance for Solid Dielectric Vacuum Recloser

Revision 3 – Effective Date: **August 6, 2014**
Related Feedback:

1.	Added NSTAR signature requirement to the Approval list and changed names and titles as required.
2.	Added Note 4 to Table 1 –Recloser Maintenance Intervals allowing the scheduling of Major Maintenance for oil filled Reclosers to be deferred if a capital replacement project has been formally established and is being implemented on a 12 year replacement plan.

Revision 4 – Effective Date: **July 1, 2015**
Related Feedback – N/A

1.	Changed Approver names on the Signature page, as required.
2.	Incorporated the following global replacements: • NU Maintenance Manual replace by Eversource Maintenance Program. • CL&P Replaced by Eversource Connecticut. • WMECO replaced by Eversource Western Massachusetts. • PSNH replaced by Eversource New Hampshire. • NSTAR replaced by Eversource Eastern Massachusetts. • NUMM replaced by EMP.
3.	Changed SME to Tim Callahan.

5.44.13 Appendix 2 – Recloser Types & Ratings (Informational only – not intended to be an all inclusive list of all Reclosers)

5.44.13.1 Single Phase Recloser Classifications

Single Phase Reclosers	Controller Type				Rating	
	Hydraulic		Electronic			
	Contacts in Vacuum	Contacts in Oil	Contacts in Vacuum	Contacts in Oil	Max Cont.	Int Rating Sym
Type H		X			50	1,250
4H		X			100	2,000
V4H	X				200	2,000
L		X			280	4,000
V4L	X				280	6,000
VXE15			X		400 *	8,000
D		X			500	10,000
E		X			100	2,500
4E		X			280	4,000

* 560 A. Available with Accessory

5.44.13.2 Three Phase Recloser Classifications

Three Phase Reclosers	Controller Type				Rating	
	Hydraulic		Electronic			
	Contacts in Vacuum	Contacts in Oil	Contacts in Vacuum	Contacts in Oil	Max Cont.	Int Rating Sym
Type 6H		X			100	2,000
V6H	X				200	2,000
W		X			560	10,000
WE				X	560 *	10,000
VWE			X		560 *	12,000
WVE27				X	560 *	8,000
VWVE27			X		560	12,000
NOVA27			X		630 *	12,500
WVE38X				X	560	8,000
VWVE38X			X		560 *	12,000
VSO12			X		560	12,000
NOVA38			X		630 *	12,500
Centurian 27			X		630	12,500

* 800 A. Available with Accessory

EVERSOURCE	WORK METHOD STANDARD ELECTRIC OPERATIONS ORGANIZATION

Sectionalizer Inspection & Battery Replacement

Document Number:	Issued Date:	Revised Date:	Revision:	Applicability:
WMS 05.12-234	12-Aug-22	---	0	CT/WMA/NH

*****This Document Supersedes EMP 6.44*****

Scope:

This document outlines a visual inspection for sectionalizers and identifies the proper method for replacing batteries on the various types of sectionalizer controls.

Safety:

Providing a work environment, free of recognized hazards is a value at Eversource. Therefore, prior to the start of any work, ensure that you are familiar and knowledgeable with all Eversource Safety Rules, Policies and Procedures that are applicable to the work and tasks at hand and perform a job brief at the job site, prior to commencing work. PPE requirements to protect the worker shall be followed as required in the Eversource Employee Safety Manual.

Reviewed by: *Signature on File* Date: 19-Jul-22
Jonathan Duffy
Director, Safety

Approved by: *Signature on File* Date: 12-Aug-22
Jennifer Hebsch
Director, System Resiliency & Standards Engineering, Distribution

Approved by: *Signature on File* Date: 08-Aug-22
Guerlemps Jean
Director, Field Engineering & Communication

Rev No.	Description	Date
0	Original Document. Supplement of EMP 6.44.	August 12, 2022

Table of Contents

Section		Page
1.0	Introduction	3
2.0	Reference Documents	3
3.0	Bill of Materials	3
4.0	Pole-Top Sectionalizers and Voltage Switches (VS) Inspection	3
4.1	Sectionalizer and VS	3
4.2	Sectionalizer and Voltage Switch IR Survey Inspection	3
4.3	Sectionalizer and VS Major Maintenance	3
5.0	Preliminary Requirements for Battery Replacement	4
6.0	Battery Replacement – 6800 Series Automatic Switch Control	4

1.0 Introduction

1.1 The following document outlines the basic inspection requirements for sectionalizer by construction type.

1.2 It is policy to ensure that sectionalizer control battery replacements are completed safely and in such a manner as to eliminate recloser mis-operation, equipment damage, and/or personal injury. This work is to be performed in conjunction with rules outlined in the Employee Safety & Health Handbook, Company Policies and Procedures, the use of appropriate PPE, as well as equipment manufacturer's recommendations.

1.3 Periodically, battery replacements are required on various sectionalizer controls used throughout the Eversource system. In order to replace batteries, sectionalizer control equipment must first be removed from service properly. Failure to do so can result in mis-operation, equipment damage, and/or personal injury.

1.4 Electricians will replace sectionalizer control batteries, as the maintenance schedule dictates, or sooner if required, in accordance with this procedure. Electricians will also refer to the manufacturer's service information for additional guidance when removing a control from service for testing and/or troubleshooting as additional steps may be required. Failure to do so can result in recloser mis-operation, equipment damage, and/or personal injury.

2.0 Reference Documents

EMP 5.44 Reclosers & Sectionalizers

TD 211 When to Wear FR Clothing

3.0 Bill of Materials

Item	Battery Type	Item No.
1	6800 Series Battery	500651

4.0 Pole-Top Sectionalizers and Voltage Switches (VS) Inspection

4.1 Sectionalizer and VS

NOTE: Check – Energized

4.1.1 Perform a visual inspection and record the operations counter.

4.1.2 Perform touch potential testing on all controls or components that may be accessible to the public.

4.2 Sectionalizer and Voltage Switch IR Survey Inspection

4.2.1 Perform an Infrared test during a Distribution IR survey or as required.

4.3 Sectionalizer and VS Major Maintenance

NOTE: All Major Maintenance shall be done De-Energized.

Sectionalizers that have problems may be replaced and taken back to the shop for inspection/maintenance.

4.3.1 Perform a power factor test to measure contact resistance to provide an indication of contact condition as well as loose carrying parts.

4.3.2 Perform an insulation resistance test (utilizing a micro-ohm meter), phase-to-phase, and phase-to-ground.

4.3.3 Test for proper operation on the Sectionalizer.

4.3.4 Inspect and dress the main and control contacts, if necessary.

4.3.5 Inspect interrupting chambers for both mechanical and electrical conditions.

4.3.6 Check all electrical and mechanical connections for tightness.

4.3.7 Thoroughly clean and remove carbon from the internal mechanism and tanks.

4.3.8 Check for traces of tracking on all insulating parts and moisture absorption of the bottom of the tank liner.

4.3.9 Check and adjust the component parts of the operating mechanism, if required.

4.3.10 Check all gaskets.

4.3.11 Ensure the tap wires are properly tightened.

4.3.12 Paint, where necessary.

4.3.13 Test Oil (Color and dielectric strength); filter and/or replace as necessary.

5.0 Preliminary Requirements for Battery Replacement

5.1 Prior to replacing the battery in the associated sectionalizer, please ensure the following steps have been complete.

5.1.1 Notify System Control Center (SOC) of the battery replacement and confirm that permission is granted.

5.1.2 Before removing any cables, place the switch in LOCAL.

5.1.3 Once the battery is installed and the sectionalizer is back to normal state, notify the SOC and verify the control alarms are cleared.

6.0 Battery Replacement – 6800 Series Automatic Switch Control

6.1 To Remove the Control from Service

6.1.1 Prior to replacing the battery on an in-service control, the following steps must be taken to prevent possible recloser mis-operation:

.1.1. Open the enclosure (front) door. The battery bracket is located on the right inside the enclosure.

.1.2. Unplug the red and black disconnect.

.1.3. Unscrew the black knobs and wing nuts from battery bracket.

.1.4. Remove old battery.

6.2 To Return the Control to Service

6.2.1 After the battery has been replaced, return the control to service as follows. Contact System Operations once work is complete, and control has been returned to service:

.1.1. Slide the new battery onto the battery shelf, with the connector facing out. Secure with the black knobs and wing nuts.

.1.2. Connect 24V battery by plugging in the red and black disconnect.

.1.3. Press black button on circuit board to enable DC circuit.

.1.4. Press battery test button on control panel (The battery test light will flash until test is complete. This test takes around 3 minutes.)

NOTE: After placing Scadamate in remote, System Control Center (SOC) should be contacted to check alarms and status of Scadamate, then if everything checks ok SOC can turn on Automatic operation if it is normally on. This will avoid possibly turning automatic operation on prior to verifying AC sensing voltage is energized.

APPENDIX 10

INSPECTION, TREATMENT, RESTORATION AND REPLACEMENT GUIDELINES DISTRIBUTION SYSTEM WOOD POLES

Scope:

This document establishes a uniform approach for distribution and sub-transmission wood pole inspections, treatment, restoration, and replacement. It defines the schedule, inspection, and reporting requirements for these facilities.

Safety:

Providing a work environment, free of recognized hazards is a value at Eversource. Therefore, prior to the start of any work, ensure that you are familiar and knowledgeable with all Eversource Safety Rules, Policies and Procedures that are applicable to the work and tasks at hand and perform a job brief at the job site, prior to commencing work. PPE requirements to protect the worker shall be followed as required in the Eversource Employee Safety Manual.

Connecticut

Approved by: *Signature on File* Date: 05-Jul-23
Barry Lashley
Director, Electric Operations

Approved by: *Signature on File* Date: 03-Jul-23
Christopher Menard
Director, Electric Operations

Approved by: *Signature on File* Date: 29-Jun-23
Clifford Williams
Director, Electric Field Operations

Approved by: *Signature on File* Date: 30-Jun-23
Jeffrey Richard
Director, Distribution Engineering

Massachusetts

Approved by: *Signature on File* Date: 05-Jul-23
Umair Zia
Director, Distribution Engineering

Approved by: *Signature on File* Date: 03-Jul-23
Robert O'Loughlin
Director, Electric Operations

Approved by: *Signature on File* Date: 10-Jul-23
Mark Baldwin
Director, Electric Field Operations, Boston

Approved by: *Signature on File* Date: 29-Jun-23
Daryle Brown
Director, Electric Field Operations, Central

Approved by: *Signature on File* Date: 06-Jul-23
Kevin Saulnier
Director, Electric Field Operations, South

Approved by: *Signature on File* Date: 29-Jun-23
David Velez
Director, Electric Field Operations, West

New Hampshire

Approved by: *Signature on File* Date: 29-Jun-23
Jason Yergeau
Director, Electric Operations

Approved by: *Signature on File* Date: 29-Jun-23
Russel Johnson
Director, Distribution Engineering

Tri-State

Approved by: *Signature on File* Date: 29-Jun-23
Jennifer Hebsch
Director, T&D Standards Engineering

Approved by: *Signature on File* Date: 21-Jul-23
Fatou Dieng
Director, Asset Management

Rev No.	Description	Date
4	1. Changed names of the Approvers on the Signature page, as required. 2. Removed Note 2 and Inspection Type table since the inspection type is covered by EMP 6.61. 3. Changed interval for Routine Inspections for NH/EMA to 10Y. 4. Added interval for Routine Inspection for CT/WMA to 15Y. 5. Added reference to EMP 5.78, American Wood Protection Association Standard U1, and Bulletin 1730B-121. 6. Updated document name to Distribution and Sub-Transmission Wood Poles. 7. Removed reference to NESC DER-07-01. 8. Updated Failure Findings section to reflect current reporting process.	July 21, 2023
3	1. Changed names of the Owner, SME, and Approvers on the Signature page, as required. 2. Incorporated the following global replacements: • NU Maintenance Manual replaced by Eversource Maintenance Program • CL&P replaced by Eversource Connecticut • WMECO replaced by Eversource Western Massachusetts • PSNH replaced by Eversource New Hampshire • NSTAR replaced by Eversource Eastern Massachusetts • NUMM replaced by EMP 3. Incorporated the following global replacements: • NU Safety Manual replaced by Eversource Employee Safety Manual	July 1, 2015
2	1. Increased the period from 5 days to 10 days in which a priority reject pole must be made safe.	January 2, 2015
1	1. Moved inspection activities to Instructions 6.61. Moved Restoration activities to Instructions 6.61A. Added references to TD 953, and Instructions 6.61.	July 15, 2011
0	1. Original Document	---

1.0 Introduction 6
2.0 Reference Documents.....6
3.0 Definitions 6
4.0 Inspection and Maintenance Intervals.....6
5.0 Maintenance Categories 7
6.0 Evaluation of Restorable Poles 7
7.0 Failure Findings.....7
8.0 Distribution and Sub-Transmission Wood Pole Maintenance Basis Documentation.....7

1.0 Introduction

1.1 This document applies to all wood distribution and sub-transmission poles within the custodianship or the maintenance responsibility of Eversource. It shall include push braces and guying stub poles as well as line poles scheduled for the given year.

1.2 See **EMP 5.78** - Transmission Overhead for information on maintenance intervals for transmission wood poles.

2.0 Reference Documents

EMP 6.61	Wood Pole Inspection
EMP 6.61A	Wood Pole Restoration
EMP 5.78	Transmission Overhead
TD 861	Reporting Distribution Equipment Failures and Defects
TD 953	Inspection, Treatment, Restoration and Replacement Guidelines for Distribution System Wood Poles
AWPA U1	Use Category System: User Specification for Treated Wood
1730B-121	United States Department of Agriculture Rural Utilities Service Bulletin

3.0 Definitions

3.1 The abbreviations used for the intervals are:

3.1.1 **Y** = Year, i.e. 2Y = 2 Years

3.1.2 **A/R** = As Required

4.0 Inspection and Maintenance Intervals

Table 1 – Distribution and Sub-Transmission Wood Pole Maintenance Intervals

Distribution and Sub-Transmission Wood Pole Maintenance Schedule	Interval
Time-Directed	
Routine Inspection, EMA/NH	10Y
Routine Inspection, CT/WMA	15Y
Condition-Based	
Priority Reject Poles	(Note 1)
Schedule Repairs or Replacement	A/R (Note 2)

NOTE: 1. Field supervision shall check the pole within forty-eight (48) hours from identification as a “priority reject” to assess the conditions and verify there is no immediate danger to the public. The pole must be made safe within 10 calendar days or less from its identification as a “priority reject” wood pole.

2. Complete the repair or replacement within one year of determination of need, following inspection.

5.0 Maintenance Categories

Table 2 – Distribution and Sub-Transmission Wood Pole Maintenance Schedule by Type

Type	Inspection Type
Time-Directed	Routine Inspection (see **EMP 6.61**)
Condition-Based	Priority Reject Poles (see **EMP 6.61**)
	Normal Reject Poles (see **EMP 6.61**)

6.0 Evaluation of Restorable Poles

6.1 The evaluation activities for restorable poles are detailed in **EMP 6.61A**.

7.0 Failure Findings

7.1 Failures of devices shall be documented in the failure reporting system used by your region and appropriate for the asset class.

7.1.1 Distribution equipment failures shall be reported using EFRS. See **TD 861** for additional information.

7.1.2 Distribution asset failures shall be documented using Maximo.

7.1.3 Stations asset failures shall be documented using CASCADE.

8.0 Distribution and Sub-Transmission Wood Pole Maintenance Basis Documentation

8.1 The maintenance activities and their schedules are based on industry experience, manufacturer's recommendations, feedback from the service technicians, and the subject matter expert, who in this case, is a Senior Engineering Technologist for Distribution Engineering Design.

Table 3 – Distribution and Sub-Transmission Wood Pole Maintenance Basis Documentation

Requirement	Basis
Routine Inspection – 10Y (EMA/NH) 15Y (CT/WMA)	Inspection required by the NESC, the National Electrical Safety Code, requires that poles are inspected as often as experience shows it necessary to maintain the strength required for the pole to remain in service. According to charts developed by Osmose on national averages, the percentage of reject poles starts to rise between ten and fifteen years. Eversource is in a Moderate Deterioration zone (National Wood Preservers Association Standard U1). United States Department of Agriculture Rural Utilities Service bulletin 1730B-121 suggests 10 year inspection intervals for poles located in a Moderate Deterioration zone. Eversource's experience finds that a ten-year inspection and treating program keeps the reject rate reasonable. NOTE: Eversource's line mechanics are taught to visually inspect and sound any pole before climbing it.

EVERSOURCE MAINTENANCE PROGRAM	Document Number: **6.61A** **Rev. 3** Document Name: **Wood Pole Restoration**
Owner Name:	Henry J. Matuszak
SME Name:	Howard Winslow
Effective Date:	July 1, 2015

Approvals:

Connecticut:
Name: Charles E. Fontenault
Title: Director – Division Operations
Date Signed: **6-11-2015**

Eastern Massachusetts:
Name: Donald M. Boudreau
Title: Director, Electric Operations
Date Signed: **6-12-2015**

New Hampshire:
Name: Marc Geaumont
Title: Director – Customer Operations
Date Signed: **6-03-2015**

Western Massachusetts
Name: Bliss A. Young
Title: Director – Operations
Date Signed: **6-05-2015**

Transmission:
Name: Michael B. McKinnon
Title: Directors – Transmission Construction Test & Maintenance
Date Signed: **6-13-2015**

Operations Services:
Name: Michael G. Waggoner
Title: Director – Engineering Services

Ensure you are using the current revision by verifying it against the controlled electronic copy located on the Distribution Engineering Standards Bookshelf or the Regulated Businesses Policies and Procedures Lotus Notes Database.

Introduction

This section of the Eversource Maintenance Program provides instruction for determining which Reject Poles (as defined in section 6.61 of this manual) are suitable for repair or restoration as a means to extend their useful life by at least:

- 15 years* (the inspection interval for wood poles not planned for replacement) or
- 5 years (for poles scheduled for replacement within that period)

It also provides guidelines for determining which poles may not be restored.

* 10 years is the interval for New Hampshire, as they are bound by the IOP with Fairpoint (Verizon).

Guidelines for Reject Pole Restoration

All of the following requirements must be met in order to qualify a pole for restoration:

1. No circuit rebuild requiring taller or larger class poles is planned within the present planning period. Search the Work Management System by pole number to determine if other work has been planned for that pole and proceed accordingly.
2. No equipment additions (capacitors, reclosers, regulators, switches or transformers) that would require a taller or larger class pole are expected in the near future.
3. Telephone Company concurs with pole restoration for those poles jointly owned. (Refer to guidelines for jointly owned poles below.)
4. If applicable, State Highway Department concurs with pole restoration for poles along state highways. For the State of Connecticut, written approval must first be obtained from the appointing authority of the local municipality of the state route where pole restoration is planned. A permit by the State of Connecticut Department of Transportation will not be issued unless approval from the municipality is included with the request.

Restoration Guidelines for poles jointly owned with AT&T (Connecticut only):

AT&T encourages pole restoration for the following cases:

- Poles with AT&T aerial or ground level interface boxes attached
- Poles with large communication cable risers attached
- Poles in Right of Ways
- Poles 45 feet and above

Guidelines for Reject Pole Replacement

Reject poles are categorized as either a Normal Reject or a Priority Reject pole, as follows:

- A **Priority Reject** pole is one which is in imminent danger of falling because it is completely decayed across the grain, or is a pole having a hollow heart with sound wood in the outer shell of one inch thickness or less.
- A **Normal Reject** pole is one that has an effective circumference equal to or less than the Minimum Groundline Circumference at Replacement (normally 67% of original circumference) but which is not deteriorated enough to be classified as a "Priority Reject" pole.

1. Replace all poles found to be Priority Reject poles.
2. Evaluate the condition of the entire pole. If there are cracks, splits, or rot at the top, extensive woodpecker holes, or other damage that would make it impractical to extend the life of the pole by restoring the pole at the ground line, then the pole should be replaced rather than restored.
    - **Exception to this rule**: If you know that the pole will be relocated or replaced for other reasons within the next five years, and restoration will extend its life at least for that period, then restore the pole instead of replacing it.
3. Assess the need to climb the pole in the future. If the pole cannot be easily reached with a bucket truck **and** the condition of the pole above the ground line is not sufficient to allow climbing, then replace the pole.
4. Determine if the pole is the correct class and height to support the facilities that are on it. The Eversource Distribution standards provide the required clearances and guidance to calculate the strength requirements to support electric and communications equipment. If it is determined that the existing pole is not sufficient due to strength or clearance issues, then replace it with the correct class and height pole.
5. Return to Distribution Maintenance and Construction a list of those poles which you have confirmed can be restored. For those which you have determined cannot be restored, state the reason(s) in writing why they cannot be restored.
6. Replace poles on scenic highways or in historical areas of towns (Connecticut only).

Guidelines to replace defective poles jointly owned with AT&T (Connecticut only):

AT&T encourages replacing defective poles under the following conditions:

1. Replace 35' poles with power primary, secondary/neutral and communications cables that cross a road. Poles with 3 phase primary, secondary and communications equipment should be replaced with a taller pole to provide access to the field side of the pole if the 35' pole is found to be defective. See DTR 04.047.
2. Replace 35' poles with power primary, secondary/neutral and more than 3 attachments in the communications gain.
3. Replace 40' poles with power primary, secondary/neutral and more than 5 attachments in the communications gain. Evaluate the pole height to ensure that proper clearance requirements are met.
4. Replace any pole that is inadequate for planned AT&T construction.
5. Replace any pole that does not meet AT&T or State of Connecticut DOT criteria for pole restoration.

Notes:

- Attachments in the communication gain refer to all attachments, roadside and field side, including bare strand. (AT&T, Municipal, State, CATV, other communication companies)
- Questionable poles will be reviewed by AT&T Line Construction/AT&T Engineering upon request.
- It is requested that pole maps of the projected pole inspection be supplied to AT&T for review. AT&T will identify areas of planned construction and reply back to EVERSOURCE.

Pole Restoration

Poles evaluated as **normal reject** poles by the inspector shall be noted in the computer database as "Restorable" if there is sufficient shell thickness to transfer the strength of the steel reinforcing member to the wood pole. A normal reject pole is restorable with one of the following options if it meets the following minimum criteria.

C-Truss System

1. Sound the pole thoroughly above the groundline again. Concentrate at the zone 15 inches to 4-1/2 feet above the groundline.
2. Drill at 4-1/2 feet above the groundline against the line of lead.
    - If this boring indicates less than a 4 inch shell thickness a second boring is made opposite (180° from) the first boring whenever possible. Other borings should be taken as necessary.
        - o If the average shell thickness is 4 inches or more at the 4-1/2 foot height, the pole can be restored using a C-Truss.
        - o If the average shell thickness is less than 4 inches at the 4-1/2 foot height, the pole should be bored at 5-1/2 feet. If the average shell thickness is 4 inches at this height, then the pole can be restored using a *larger* C-Truss.
        - o If the average shell thickness is less than 4 inches at both 4-1/2 and 5-1/2 foot heights, then use a Fiberwrap System to restore the pole.
3. Drill at 15 inches above the groundline against the line of lead.
    - If this boring indicates less than a 2 inches shell thickness, a second boring is made opposite (180° from) the first boring whenever possible. Other borings should be taken as necessary.
        - o If the average shell thickness at 15 inches is 2 inches, the pole can be restored using a C-Truss.
        - o If the average shell thickness at 15 inches is less than 2 inches, bore the pole at a 26 inch height. If there is a 2 inch average at the 26 inch height, the pole can be restored using the *larger* C-Truss.
        - o If the average shell thickness at both 15 inch and 26 inch heights is less than 2 inches, then use a Fiberwrap System to restore the pole.

Fiberwrap System *(Connecticut and Western Massachusetts only)*

1. Drill at 6 feet above the groundline against the line of lead.
   - If this boring indicates less than a 4 inch shell thickness, a second boring is made opposite (180° from) the first boring whenever possible. Other borings should be taken as necessary.
     - o If the average shell thickness is 4 inches or more, the pole can be restored using a Fiberwrap.
     - o If the average shell thickness is less than 4 inches, continue boring at 6 inch intervals up the pole until a 4 inch average shell thickness is obtained or the height of 10 feet is reached.
     - o If 4 inches of shell thickness if found at a height of 10 feet or less, the pole can be restored using a Fiberwrap.
     - o If an average of a 4 inch shell does not exist from 6 to 10 feet, the pole cannot be restored.

Summary of Changes

Rev. 1

1.	Moved restoration steps from 6.61 to this instruction.

Rev. 2 - Effective**:** 01/02/15
Feedback: N/A

1.	Revised Step 5 on Page 2 to read as follows: Return to Distribution Maintenance and Construction a list of those poles which you have confirmed can be restored. For those which you have determined cannot be restored, state the reason(s) in writing why they cannot be restored.

Revision 3 – Effective Date: **July 1, 2015**
Related Feedback – N/A

1.	Changed names of the Owner, SME, and Approvers on the Signature page, as required.
2.	Incorporated the following global replacements: • NU Maintenance Manual replaced by Eversource Maintenance Program. • CL&P replaced by Eversource Connecticut. • WMECO replaced by Eversource Western Massachusetts. • PSNH replaced by Eversource New Hampshire. • NSTAR replaced by Eversource Eastern Massachusetts. • NUMM replaced by EMP.
3.	Incorporated the following global replacements: • NU Safety Manual replaced by Eversource Employee Safety Manual.

EVERSOURCE	WORK METHOD STANDARD ELECTRIC OPERATIONS ORGANIZATION

Wood Pole Testing

Document Number:	Issued Date:	Revised Date:	Revision:	Applicability:
WMS 08.02-234	05-Oct-23	---	0	CT/WMA/NH

***** This Document Supersedes EMP 6.61 *****

Scope:

This document details the steps to test Eversource owned wood poles and jointly owned, Eversource maintained wood poles, on public or private property. This shall encompass all distribution line poles as well as push braces and guy stub poles.

Safety:

Providing a work environment, free of recognized hazards is a value at Eversource. Therefore, prior to the start of any work, ensure that you are familiar and knowledgeable with all Eversource Safety Rules, Policies and Procedures that are applicable to the work and tasks at hand and perform a job brief at the job site, prior to commencing work. PPE requirements to protect the worker shall be followed as required in the Eversource Employee Safety Manual.

Approved by: *Signature on File* Date: 05-Oct-23
Jennifer Hebsch
Director, T&D Standards Engineering

Rev No.	Description	Date
0	Issued as Approved. Supersedes Eversource EMP 6.61	October 5, 2023

Table of Contents

Section		Page
1.0	General	3
2.0	Reference Documents	3
3.0	Visual Inspection	3
4.0	IML Testing	5
5.0	Reject Poles	6

1.0 General

1.1 This document details the steps to test Eversource owned wood poles and jointly owned, Eversource maintained wood poles, on public or private property.

1.2 All pole evaluations require a visual inspection.

1.3 When a pole is greater than 20 years old, or has failed a visual inspection, the IML Wood Inspection Drill shall be used to further evaluate.

2.0 Reference Documents

DTR 05.091	Pole Reflectors
WMS 08.14-234	Wood Pole Inspection Using the IML Inspection Drill
EMP 5.61	Distribution and Sub-Transmission Wood Poles
EMP 6.61A	Wood Pole Restoration
NESC	National Electric Safety Code (ANSI C2), 2023

3.0 Visual Inspection

3.1 Visually inspecting each pole shall include a thorough observation of the above-ground portion of each pole and all attachments. Record any findings into the system appropriate for the activities being performed.

3.2 Visually inspect the pole for the following defects:

3.2.1 Pole Inspection & Markings

.1.1. Pole top split or deteriorated

.1.2. Leaning pole

.1.3. Woodpecker holes or/and Insect damage

.1.4. Conks (i.e. fungus, fruiting bodies), knot clusters or holes

.1.5. Pole stencils that are missing or damaged

.1.6. Reflectors that are missing or damaged

.1.7. Unauthorized attachments, such as flags, signs, etc.

3.2.2 Construction & Hardware Inspection

.2.1. Crossarm damaged or decayed

.2.2. Broken or damaged insulators, spacers, or brackets

.2.3. Broken or loose tie wire

.2.4. Condition of the conductor and guy wire(s)

.2.5. Trees, limbs, or vegetation encroaching on conductors or equipment.

.2.6. Condition of ground wire and rod(s)

3.3 Check to see if the pole is set to the appropriate depth. The following table indicates the correct distance from the ground line to the bottom of the pole brand.

Table 1 – Pole Depth vs Ground Line

Length of Pole (in feet)	Ground Line Distance	
	To Butt	To Brand
25	5	5
30	5.5	4.5
35	6	4
40	6	4
45	6.5	3.5
50	7	3
55	7.5	6.5

3.3.1 Measure the distance from the ground line to the bottom of the pole brand. If the distance is *more than 6 inches* than the value in the 3rd column of Table 1:

.1.1. Attach an aluminum pole tag letter "**S**" just below the bottom of the pole brand. Record the information into the appropriate inspection record.

.1.2. Do not record this pole as set shallow if there is an "**R**" tag attached to the pole just below its brand, as this indicates the presence of enough rock to support the pole.

.1.3. Install Pole ID tag if necessary.

3.3.2 Install a reflector on all wood poles located within three feet (3 feet) of any roadway if no guard rail is present. The reflector shall be installed on the wood pole in accordance with **DTR 05.091** and in the direction of travel. If unable to install, no follow-up action is required.

3.4 Evaluate a pole if its effective ground line circumference has been reduced by decay or insect pockets, hollow heart, mechanical damage or has had exterior decayed wood removed by chipping prior to ground line treatment.

3.4.1 Calculate the percentage of the remaining pole strength based on the effective ground line circumference and the existing conductor and attachment load.

3.4.2 Remove from service, any corner (angle) poles, dead end poles, guy stubs and push braces with less than 80% of their original ground line circumference. Circumference measurements for new poles are listed in the following table.

Table 2 – Pole Dimensions Measured 5 feet from the Bottom of the Pole

Length of Pole of Feet From Top	Minimum Dimension (in inches)	Class						
		H-2	H-1	1	2	3	4	5
0’	Diameter Circumference	9.9 31.0	9.2 29.0	8.6 27.0	8.0 25.0	7.3 23.0	6.7 21.0	6.0 19.0
2’	Diameter Circumference	10.2 31.9	9.5 29.8	8.8 27.8	8.2 25.8	7.5 23.7	6.9 21.7	6.3 19.7
5’	Diameter Circumference	10.6 33.2	9.9 31.1	9.3 29.1	8.6 25.8	7.9 24.9	7.3 22.8	6.6 19.7
10’	Diameter Circumference	11.3 35.4	10.6 33.2	9.6 30.0	8.9 28.0	8.3 26.0	7.7 24.0	7.0 22.0
15’	Diameter Circumference	12.0 37.6	11.2 35.3	9.9 31.0	9.2 29.0	8.6 27.0	8.0 25.0	7.3 23.0
20’	Diameter Circumference	12.7 39.8	11.9 37.4	10.7 33.5	10.0 31.5	9.4 29.5	8.8 27.5	8.1 25.5
25’	Diameter Circumference	13.4 42.0	12.6 39.5	11.6 36.5	10.9 34.0	10.2 32.0	9.5 29.5	8.7 27.5
30’	Diameter Circumference	13.8 43.5	13.2 41.5	12.4 39.0	11.6 36.5	10.9 34.0	10.0 31.5	9.2 29.0
35’	Diameter Circumference	14.6 46.0	13.8 43.5	13.1 43.5	12.3 38.5	11.5 36.0	10.7 33.5	9.9 31.0
40’	Diameter Circumference	15.4 48.5	14.5 45.5	13.7 43.0	12.8 40.5	11.9 37.5	11.1 35.0	10.3 32.5
45’	Diameter Circumference	16.1 50.5	15.1 47.5	14.3 45.0	13.3 42.0	12.0 39.0	11.7 36.5	
50’	Diameter Circumference	16.6 52.0	15.8 49.5	14.7 46.5	13.8 43.5	12.9 40.5		

4.0 IML Testing

4.1 When a pole is greater than 20 years old, or has failed the visual inspection for any reason, the IML Wood Inspection Drill shall be used to further evaluate suspected issues.

4.2 The IML wood inspection drill is used to penetrate utility poles and accurately measure resistance to detect any soft wood, rot or cavities present in the wood. These tools use a minimally invasive technique to identify internal defects and help us maintain a safe and reliable system. This inspection is essentially a health assessment of the pole. (Refer to **WMS 08.14** for further detail).

4.3 Prior to drilling, take note to any obstruction (risers, C-Truss, concrete, etc.) that would interfere with drill bit exiting the backside of drilling sample. Eversource has two drilling sequence presets based on field conditions.

4.3.1 3BGL (three below grade level) test sequence is comprised of one horizontal and three below grade drillings. This is the default testing sequence at Eversource and to be used where there are little to no obstructions.

4.3.2 4BGH (four below grade, half drills) test sequence is comprised of one horizontal and four, below grade half drillings. This is an alternate testing sequence to be used when obstructions are present.

4.3.3 If additional tests are desired due to inconclusive data or suspicions, they can be added when the initial testing sequence is complete. The meter’s display will prompt the user if any additional drillings are to be conducted and added to this pole location’s test data.

4.4 The inspection drill captures the measurements based off the resistance of the wood so the wear and tear on the bit is widely varied based off the density level of the wood. Good practice to prevent this is to always check the bit quality/shape throughout the day, ensuring there is an edge to the bit. If the operator experiences hitting a rock, nail, or any other hard object, they will typically hear the sound and see the change on the graph. If this happens, the next step should be to extend the bit and check its condition to ensure the edge is still in good working condition. On average, you can 100+ drillings per bit.

4.5 If testing is done by a contractor, all pole testing raw data from the IML tool must be provided with the final testing report provided to Eversource.

5.0 Reject Poles

5.1 Priority Reject Poles

5.1.1 A priority pole is one which is in imminent danger of failing because it is completely decayed across the grain, or it has a hollow heart with sound wood in the outer shell of one inch thickness or less.

.1.1. Use the C-aluminum pole tag which measures 2 inches high and 2 ½ inches wide. It has a clear aluminum arrow with an "X" inscribed in a circle imposed on the shaft of the arrow on a red background.

.1.2. Paint a yellow "X", approximately 1 foot square in size, on the roadside of the pole, centered approximately 6 feet above the ground line. Then, attach one C tag centered on the "X" and attach another C tag at approximately the same height on the field side of the pole.

.1.3. If the pole is defective in the ground line section, place the tags so the arrow points downward. If the pole is defective in the upper portion, place the tags so the arrowpoints upward. If, however, the pole is defective in both the ground line section and in the upper portion, place a double set of tags; one set with the arrow pointing downward and the other set with the arrow pointing upward. Attach the tags with 1 ¼ inch galvanized roofing nails.

.1.4. **Report the pole immediately** by telephone, radio, or email (whichever is appropriate for your company requirements) to the appropriate district in accordance with the company specific requirements.

NOTE: Field supervision shall check the pole within forty-eight (48) hours from identification as a "priority reject" to assess the conditions and verify there is no immediate danger to the public. The pole must be made safe within 10 calendar days or less from its identification as a "priority reject" wood pole.

.1.5. Record the information in the computer database and include the name of the person the reject information was reported to in the comments section.

5.2 Normal Reject Poles

5.2.1 Normal reject poles are those poles which have effective circumferences equal to or less than the minimum ground line circumference at replacement (normally 67% of original circumference), but which are not deteriorated enough to be classified as "priority poles". Circumference measurements for

new poles are provided on page 4 of this instruction. Refer to National Electric Safety Code (ANSI C2), Table 261-1, Rule 250B.

.1.1. Reject decayed poles having a minimum shell thickness of less than 2 inches. If the hollow heart is the result of severe ant or termite infestation, then reject those poles having a minimum shell thickness of less than 3 inches.

.1.2. Normal reject poles shall be identified as follows:

.1.2a. Use the B-aluminum pole tag which measures 2 inches high and 2 ½ inches wide. It has a clear aluminum arrow on a red background.

.1.2b. Attachment instructions for the B tag are the same as for the C tag used to identify priority poles in the preceding section.

.1.3. Refer to **EMP 6.61A** for details on evaluating “Normal” reject poles and performing their restoration.

APPENDIX 11

APPENDIX NO LONGER USED

APPENDIX 12

UNDERGROUND SYSTEM - NETWORK TRANSFORMERS

Scope:

This document details the maintenance of Network Transformers.

Safety:

Providing a work environment, free of recognized hazards is a value at Eversource. Therefore, prior to the start of any work, ensure that you are familiar and knowledgeable with all Eversource Safety Rules, Policies and Procedures that are applicable to the work and tasks at hand and perform a job brief at the job site, prior to commencing work. PPE requirements to protect the worker shall be followed as required in the Eversource Employee Safety Manual.

Connecticut

Approved by: *Signature on File* Date: 28-Jun-23
Wayne Gagnon
Director, Station Operations

Approved by: *Signature on File* Date: 03-Jul-23
Christopher Menard
Director, Electric Operations

Approved by: *Signature on File* Date: 28-Jun-23
Jeffrey Richard
Director, Distribution Engineering

Massachusetts

Approved by: *Signature on File* Date: 05-Jul-23
Umair Zia
Director, Distribution Engineering

Approved by: *Signature on File* Date: 28-Jun-23
Anthony Anzalone
Director, Station Operations

Approved by: *Signature on File* Date: 06-Jul-23
Guerlemps Jean
Director, Field Engineering /Communications

New Hampshire

Approved by: *Signature on File* Date: 28-Jun-23
Eric Sutton
Director, Station Operations

Approved by: *Signature on File* Date: 28-Jun-23
Russel Johnson
Director, Distribution Engineering

Tri-State

Approved by: *Signature on File* Date: 28-Jun-23
Jennifer Hebsch
Director, T&D Standards Engineering

Approved by: *Signature on File* Date: 18-Jul-23
Fatou Dieng
Director, Asset Management

Approved by: *Signature on File* Date: 03-Jul-23
Demetrios Sakellaris
Director, Substation Technical Engineering

Approved by: *Signature on File* Date: 10-Jul-23
Daniel Mungovan
Director, Distribution Network and Underground Systems

Rev No.	Description	Date
4	1. Changed names of the Approvers on the Signature page, as required. 2. Updated Introduction section. 3. Added reference to TD 861 and related WMS documents. 4. Removed reference to EMP 6.30A. 5. Updated Failure Findings section to reflect current reporting process. 6. Updated Basis Documentation section.	July 18, 2023
3	1. Changed names of Owner, SME and approvers on the signature page, as required. 2. Incorporated the following global replacements: • NU Maintenance Manual replace by Eversource Maintenance Program • CL&P replaced by Eversource Connecticut • WMECO replaced by Eversource Western Massachusetts • PSNH replaced by Eversource New Hampshire • NSTAR replaced by Eversource Eastern Massachusetts • NUMM replaced by EMP 3. Deleted Note 1 on Table. Extended the Major Maintenance from 2 years to 4 years for all Network Transformers. 4. Added reference to Eversource Employee Safety Manual.	June 1, 2015
2	1. Changed names of Owner, SME and approvers on the signature page, as required. 2. Added a requirement to Table 5.30.1.1 allowing for Major Maintenance on remotely. 3. Updated monitored units to be performed at a frequency of four (4) years. 4. Added a note to Table 5.30.1.1 clarifying what is required for “Remote Monitoring.” 5. Incorporated NSTAR-only instructions.	October 1, 2014
1	1. Changed approver names on the signature page, as required. 2. Deleted detail requirements, as they are now part of Instruction 6.30.	March 6, 2013
0	Original Document	---

1.0 Introduction 6
2.0 Reference Documents.....6
3.0 Definitions 7
4.0 Inspection and Maintenance Activity Schedules 7
5.0 Maintenance Categories 7
6.0 Failure Findings.....7
7.0 Network Transformers Maintenance Basis Documentation.....8

1.0 Introduction

1.1 A network transformer is generally used for step-down purposes from underground primary cables and supplies a secondary network system through network protectors. A network transformer is typically installed below ground level and is designed and constructed to operate in harsh environments such as street vaults, sidewalk vaults, and customer building vaults.

1.2 A network transformer consists of two main sections. The first section is the main tank in which the core and coils are located, and the second section is the high voltage switch. The standard network transformer has a one compartment high voltage switch, but there are also network transformers with a two-compartment high voltage switch in service. One compartment of this high voltage switch contains the switch mechanism, and the other compartment is the high voltage termination compartment.

1.3 Network transformers utilize a number of different insulating fluids within the different chambers. Therefore, it is essential to check the nameplate for each network transformer to identify the insulating fluids in use.

1.4 As of 2023, new network transformers that Eversource will be purchasing will be consisting of a single tank design with the primary switch in the main tank of the transformer.

NOTE: All specific maintenance requirements that are followed by a triangle symbol "▲" are explained in the Maintenance Basis Documentation section of this chapter.

2.0 Reference Documents

EMP 6.30	Network Transformers
WMS 56.04-1	Open Network Protector Station Operations Department
WMS 58.01-1	Switching Spot Network Transformers (TNV)
WMS 58.02-1	Arcguard Protection System
WMS 58.03-1	Changing No-Load Taps on Network Transformers
WMS 58.04-1	Spot Network Restoration
WMS 59.01-1	Operating a Network Primary Switch on a Network Transformer in Cambridge with a De-energized Network
WMS 86.03-1	Network Vault Inspection
WMS 86.03-S1	Network Vault Inspection Form
WMS 89.10	Network Feeder Switching and Grounding
WMS 90.19-1	Network Transformer Insulating Fluid Sampling and Testing
WMS 91.15-1	Phase Verification Following Network Upon Completion of Cable Splicing on a 15kV Network Feeder
TD 202	Oil Sampling and Analysis
TD 861	Reporting Distribution Equipment Failures and Defects
TD 864	Spot Network Supply Protection Requirements
TD 872	Repair, Test, & Assembly of Network Transformers & Protectors

3.0 Definitions

3.1 The abbreviations used for the intervals are:

3.1.1 **Y** = Year, i.e. 2Y = 2 Years

3.1.2 **A/R** = As Required

4.0 Inspection and Maintenance Activity Schedules

Table 1 – Network Transformer Maintenance Intervals

Network Transformers Maintenance Schedule	Interval
Time-Directed	
Routine Maintenance – Energized ▲	1Y
Major Maintenance – De-Energized ▲	4Y
Condition-Based	
Any defects found during Routine Maintenance or Major Maintenance, such as oil leaks, unexplained temperature changes, dissolved gas analysis, etc.	A/R

5.0 Maintenance Categories

5.1 Refer to **EMP 6.30** for details on performing the following maintenance tasks:

Table 2 – Network Transformers Schedule by Type

Type	Inspection Type	Energized / De-Energized
Time-Directed	Routine Maintenance ▲	Energized
	Major Maintenance ▲	De-Energized

6.0 Failure Findings

6.1 Failures of devices shall be documented in the failure reporting system used by your region and appropriate for the asset class.

6.1.1 Distribution equipment failures shall be reported using EFRS. See **TD 861** for additional information.

6.1.2 Distribution asset failures shall be documented using Maximo.

6.1.3 Station asset failures shall be documented using CASCADE.

7.0 Network Transformers Maintenance Basis Documentation

Table 3 – Network Transformers Maintenance Basis Documentation

Requirement	Basis
Routine Maintenance – 1Y (Energized)	An annual Routine Maintenance has been proven to find minor defects before they affect transformer performance.
Major Maintenance – 4Y (De-Energized)	Network transformer manufacturers suggest periodic sampling and testing of the fluid in high voltage switches and network transformers. Industry practice has proven that a four-year Major Maintenance interval provides satisfactory equipment performance. As data is collected and examined, this interval may be changed.

EVERSOURCE MAINTENANCE PROGRAM	Document Number: **6.30** **Rev. 3** Document Name: **Network Transformers**
Owner Name:	Henry J. Matuszak
SME Name:	Enes Basic
Effective Date:	July 1, 2015

Approvals:

Connecticut:
Name: Jeffrey S. Franson _____
Title: Director – Substation Operations
Date Signed: **6-11-2015**

Name: Charles E. Fontenault _____
Title: Director – Division Operations
Date Signed: **6-05-2015**

Eastern Massachusetts:
Name: Robert P. Billet _____
Title: Director – Station Operations
Date Signed: 6-03-2015

New Hampshire:
Name: James C. Eilenberger _____
Title: Director – Energy Delivery
Date Signed: **5-28-2015**

Western Massachusetts:
Name: Bliss A Young _____
Title: Director – Asset Management
Date Signed: **6-10-2015**

Engineering Services:
Name: Michael G. Waggoner _____
Title: Director – Engineering Services
Date Signed: **6-01-2015**

Ensure you are using the current revision by verifying it against the controlled electronic copy located on the Distribution Engineering Standards Bookshelf or the Regulated Businesses Policies and Procedures Lotus Notes Database.

Network Transformer Maintenance Instructions

Before You Begin

Prior to assigning work in Underground Vaults & Manholes, Supervision shall:

1. Ensure that all employees are properly trained and qualified to perform this work, and that all appropriate PPE and safety requirements are met, including but not limited to those defined within the following documents:
   - TD 211, “When to Wear FR Clothing”
   - TD 952, “Protection of Personnel Entering Enclosed Spaces” (Connecticut and Western Massachusetts only)
   - TD 955, “Confined Space Requirements”
   - Eversource Employee Safety Manual
   - TD -877 Managing Arch Flash Hazards on CL&P Distribution Facilities (Connecticut ONLY)
2. Ensure those performing the work are aware that of the following PPE requirements whenever working in Underground Vaults & Manholes:
   - Safety Glasses with side shields
   - EH (Electrical Hazard) rated boots
   - High Voltage gloves
   - FR (flame resistant) clothing, as specified in TD 211
3. Whenever “Work” is performed on a network unit as defined in paragraph 5 of this procedure, the following PPE is required :
   - Protective Arc Flash Hood (Beehive), (Stock Code 442151) or company approved equivalent.
   - Safety glasses with side shields
   - Minimum of low voltage (Class 0) rubber gloves (use of High Voltage Rubber Gloves is preferred)
   - Double layer of full body FR Clothing (i.e., FR shirt and pants plus full body FR coverall)
4. All persons performing “Work” on Network Units as defined below and those persons within the immediate work zone while “Work” is being performed shall wear at minimum double layer full body FR clothing, minimum 25 cal. FR rated hood (beehive type with built-in arc rated face shield), safety glasses and, minimum of low voltage (Class 0) rubber gloves (high voltage rubber gloves preferred). As defined in this document, “Work” includes the following tasks:
   - Installing or removing transformer links and network fuses
   - Rolling or racking out the protector
   - Phasing the unit
   - Connecting test leads to an energized bus
   - Obtaining transformer and network voltages

- Test probe usage prior to installing links and network fuses
- Or any other work performed inside the network protector enclosure with the transformer and/or network bus energized

5. Prior to accessing manholes and vaults to investigate, inspect or work on a network unit in a single transformer vault, the maintenance records for that unit will be reviewed for condition of the unit.

   - If the records indicate that a major maintenance was completed within the maintenance cycle per the Eversource Maintenance Program and the unit has no major deficiencies, work may commence on the network transformer with the unit energized following all applicable company procedures and the protocols. (Applicable only to Connecticut and Western Massachusetts)
   - If the records do not indicate that a major maintenance was completed on the unit within the maintenance cycle per the Eversource Maintenance Program or major deficiencies have not been addressed, then the primary feed to the unit will be de-energized prior to commencement of maintenance work. The maintenance work on the unit will then take place with the unit de-energized, and only the secondary cables will be energized back from the street grid during the work. This will only apply to single transformer vault units.
   - The deficiencies described below, require the primary circuit to be de-energized in accordance with the operating policy.
     - Major maintenance not performed within the maintenance cycle required by the Eversource Maintenance Program.
     - Low oil level (below sight glass / gauge level) in primary switch or transformer or dielectric quality of oil below acceptable level
     - Any other significant defect or abnormal condition that may affect the safe operation of the network protector or transformer, such as, free standing water in the primary switching or transformer oil sample, excessive damage / corrosion in the network protector or other defect that requires immediate repair to return to service.

6. For cases where multiple network transformers exist in a vault, it will generally not be possible to de-energize all of those units for a variety of reasons. Therefore, prior to working on a network transformer, where multiple network transformers exist in a vault, maintenance records shall be reviewed for major deficiencies and/or major maintenance completion within the maintenance cycle per the Eversource Maintenance Program prior to working in the vault.

   - If records indicate that major maintenance for all transformers within the vault is up-to-date, and that there are no major deficiencies, then work may proceed.
   - If major deficiencies or major maintenance was not completed, management will jointly work with employees for the appropriate steps to follow.

7. With the exception of the commissioning of a new network unit, 480V/277V network units shall have major maintenance completed with the primary de-energized. 216V/125V network units may be worked on with the primary energized as long as no oil work (i.e. oil sampling, topping off and/or retro-filling) is being performed.
    - Network major maintenance that includes any oil work (i.e. primary equipment oil sampling, topping off or the like) shall only be completed with the primary equipment de-energized
8. Job Setup: Work zones, requirements for various jobs, switching requirements. All arrangements should be completed or setup prior to beginning the job. These include cones, signage, and police or traffic control. Check holes prior to entry for cleaning needs, i.e. pumping water, debris, contaminates, visible oil, and providing samples for lab analysis.
9. Review the manufacturer's manuals for all safety notations (Danger, Warnings, and Cautions), as needed. These may be in sections of the manual other than with the instructions.
10. Prepare the vault for entry.
    a) Check for dangerous atmospheric conditions before entering the vault using company-approved atmospheric sampling equipment.
    b) Ventilate the vault, if required, in accordance with the Eversource Employee Safety Manual.
    c) Remove any standing water or debris from the vault in accordance with ENVIROWI-0105 or company-specific requirements, as required. This is located in the Environmental and Facility Procedures section of the Distribution Engineering Standards Bookshelf.

Routine Maintenance – Energized

1. Check for stray voltage in accordance with EMP 6.62 - Touch Potential

2. Record the fluid level in the transformer using the liquid level gauge. The level should be between mid-scale and below top of scale (i.e. high but visible) If there is no oil indication, **immediately** stop the job and notify Supervision.

> **CAUTION**
>
> Continued operation of a Network Transformer with an abnormal main tank oil level requires Manager level approval.

> **NOTE**:
> Some transformers are equipped with magnetic mount oil gauges. These should be removed, cleaned and remounted to ensure their accuracy.

3. Look for any other defect or abnormal condition that may affect the operation of the network transformer.
4. Verify the transformer nomenclature, if applicable. Clean or replace as necessary.
   - Ensure the work order matches the transformer ID tag and that all identification and location numbers are correct.
   - Ensure the PCB tag is in place. Replace as necessary.
5. Ensure that the high voltage switch position nameplates and nomenclature are visible and secure. Clean or replace as necessary.
6. Verify the high voltage switch is closed.
7. Check the primary cables for leaking or damaged splices, indications of tracking, and adequate cable support.
8. Check for transformer leaks.
   - Cooling Radiator (if present)
   - Leaking Termination (stuffing) box (if applicable)
   - Leaking Potheads (if applicable)

   Fix those that you can by tightening connections, etc. Report those leaks that can't be fixed at the time of this maintenance call.
9. Check the high voltage switch, including the termination compartment, when applicable, for leaks. Report those leaks that can't be fixed at the time of this maintenance call.

10. Check the transformer and the high voltage switch for any abnormalities such as:
    - Severe rust – or corrosion from road salt
    - Physical damage from falling concrete, vandalism, failed mounting rails, etc.
    - Indications of overheating
11. Record the fluid level in the high voltage switch using the gauge. The level should be between mid-scale and below top of scale (i.e. high but visible)

> **NOTE**:
> A new high voltage switch has one compartment and the fluid level is obtainable. For an older high voltage switch with two compartments, the fluid level in the termination compartment *MAY NOT* be verified with the transformer energized.

12. Record the peak temperature, if the gauge has a drag hand, and present temperature of the fluid in the transformer from the gauge. Reset the drag hand (if installed) to the present reading.
13. Observe the primary connections on the high voltage switch for any unusual conditions such as cracked lead wipe, discolored high voltage connection, signs of heat, etc.
14. Check the condition of the valve handles to ensure they are in good condition.
15. Ensure the valves are closed and that there are no leaks.
16. Ensure the transformer and protector have separate grounds to the ground grid or vault ground rod. Do not rely on the mount support to act as a ground for the protector.
17. Check for the presence of anodes and the condition of their connections (if anodes are installed). Replace if needed.

Major Maintenance – De-Energized

Note: It is acknowledged that switching protocols vary among locations. It is the responsibility of the technician performing the maintenance work to either perform the following steps or to ensure that they have been performed.

1. De-energize the primary network cable.
2. Ensure the cable is de-energized.
   - For those installations in which the primary network cables have a rack in ground and test device, rack in the ground and test device and then perform a **live – dead – live** test with a noisy tester.
   - For those installations in which the primary network cables *do not* have a rack in ground test device, perform a **live – dead – live** test with an approved tester, then install grounds on the cable just above the pothead.
   - When the network transformer is de-energized, there will be no audible hum or vibration.
3. Ensure the network protector is in the **Open** position, in manual mode, and locked in order to prevent unintentional operation.
4. Verify the high side switch is closed.

> **Warning**:
>
> You must obtain permission from Dispatch before operating the high side switch on a network transformer. (Connecticut and Western Massachusetts ONLY)

> **Warning**:
>
> There have been instances in which the roll pin that connects the high side switch handle to the operating shaft have failed on Carte transformers. This has allowed the handle to move without actually rotating the operating shaft, thereby causing a false reading of the switch's position.

5. On **Carte** transformers, inspect the pin that connects the high side switch handle to the operating shaft. Replace it with a new, solid pin if it shows any signs of corrosion or damage.
6. Obtain a fluid sample from the transformer and the high voltage switch and replenish the fluids.
   - Record the date and quantity of oil added to the main tank to replenish level in the Network Transformer
   - Refer to TD202 to ensure compliance with ChemLab requirements.
   - Submit the fluid samples for testing

7. Pressure-test the transformer main tank and the high voltage switch. Slowly pressurize each with nitrogen to 3.0 PSI (or Manufacturer's recommendations). Once stabilized, pressure should remain greater than 2.8 PSI for 30 minutes.

   - When the test passes, reduce the pressure to 0.5 PSI.
   - If the test fails, further investigation is required. Notify Supervision

Change Summary

Revision 1 – Effective Date: **November 12, 2010**
Related Feedback: MS-0165-0167, 0171, 0172, 0194, 0195

Rev. 1	Description of Changes
1.	Changed Approver names on the Signature page, as required.
2.	Revised ""Before You Begin" section to incorporate more detailed safety information previously contained in Network Operating Policy.
3.	Replaced reference to Accident Prevention Manual with reference to NU Systems Employee Safety & Health Handbook.
4.	Removed all references to TD 871, which has been superseded.
5.	Deleted requirement to check cable supports.
6.	Revised to require Manager approval for continued operation of Network Transformers with main tank abnormal oil levels.
7.	Added step to check for stray voltage in accordance with NUMM 6.62.
8.	Clarified hazardous condition which could affect safe operation.
9.	Revised to require recording of the date and amount of oil (ounces) added to the main tank during network transformer inspections and maintenance.
10.	Defined main tank abnormal oil levels in the instruction.
11.	Required recording of peak temperature and present temperature.
12.	Clarified that anodes should be replaced if needed.
13.	Clarified Pressure Test requirements.
14.	Added Work Guides for Network Transformer Routine Maintenance.
15.	Added Network Transformer reporting form.

Revision 2 – Effective Date: **January 2, 2015**
Related Feedback: None

1.	Changed names of Owner, SME and approvers on the signature page, as required.

Continued…

Revision 3 – Effective Date: **July 1, 2015**
Related Feedback – N/A

1.	Changed names of the Owner, SME, and Approvers on the Signature page, as required.
2.	Incorporated the following global replacements: • NU Maintenance Manual replaced by Eversource Maintenance Program. • CL&P replaced by Eversource Connecticut. • WMECO replaced by Eversource Western Massachusetts. • PSNH replaced by Eversource New Hampshire. • NSTAR replaced by Eversource Eastern Massachusetts. • NUMM replaced by EMP.
3.	Incorporated the following global replacements: • NU Safety Manual replaced by Eversource Employee Safety Manual.

Network Transformer Form
Routine - Energized
EMP 6.30-1
Guideline

	INSPECT	INSPECTION ATTRIBUTES
1.	Stray Voltage	Check for stray voltage in accordance with NUMM 6.62 - Touch Potential.
2.	Check The Transformer Fluid Level	The level should be between mid-scale and below top of scale (i.e. high but visible) If there is no oil indication, **stop the job** and notify Supervision.
3.	Significant Defect Or Abnormal Condition	Look for any other significant defect or abnormal condition that may affect the safe operation of the network transformer, such as, free standing water in the primary switching or transformer oil sample, excessive damage / corrosion in the network protector or other defect.
4.	Verify The Transformer Nomenclature	Ensure the work order matches the transformer ID tag and that all identification and location numbers are correct. Clean or replace as necessary.
5.	PCB Tag	Ensure it is in place. Replace as necessary.
6.	High Voltage Switch Position Nameplates	Ensure that the nameplate and nomenclature are visible and secure. Clean or replace as necessary
7.	High Voltage Switch	1 Verify it is closed. 2 When applicable, Check the high voltage switch for leaks (including the termination compartment).
8.	Primary Cables & Connections	Check for any unusual conditions including: • indications of tracking, • adequate cable support • leaking or damaged splices, • cracked lead wipe • discolored high voltage connection, • signs of overheating
9.	Leaks	1 Check for transformer leaks. 2 Check for Leaking Termination (stuffing) box. 3 Check for Leaking Potheads. 4 high voltage switch, including the termination compartment.
10.	High Voltage Switch Fluid Level	Record the fluid level in the high voltage switch. The level should be between mid-scale and below top of scale (i.e. high but visible).
11.	Temperature	Record the peak temperature, if the gauge has a drag hand, and present temperature of the fluid in the transformer from the gauge. Reset the drag hand (if installed) to the present reading.
12.	Valves	1 Check the condition of the valve handles to ensure they are in good condition. 2 Ensure the valves are closed and that there are no leaks.
13.	Grounds	Ensure the transformer and protector have separate grounds to the ground grid or vault ground rod. Do not rely on the mount support to act as a ground for the protector..
14.	Corrosion Protection	Check for the presence of anodes and the condition of their connections (if anodes are installed). Replace if needed.

Network Transformer Form
Routine – De-Energized
EMP 6.30-1
Guideline

	INSPECT	INSPECTION ATTRIBUTES
1.	Primary Cable	De-energize the primary network cable and ensure it is de-energized.
2.	Network Protector	Ensure the network protector is in the **Open** position, in manual mode, and locked in order to prevent unintentional operation.
3.	High Side Switch	Verify the high side switch is closed. On **Carte** transformers, inspect the pin that connects the high side switch handle to the operating shaft. Replace it with a new, solid pin if it shows any signs of corrosion or damage.
4.	Fluid Sample	Obtain a fluid sample from the transformer and the high voltage switch and replenish the fluids. • Refer to TD202 to ensure compliance with ChemLab requirements. • Record the date and quantity of oil added to the main tank to replenish level in the Network Transformer. • Submit the fluid samples for testing.
5.	Pressure Test	Pressure-test the transformer main tank and the high voltage switch. Slowly pressurize each with nitrogen to 3.0 PSI (or Manufacturer's recommendations). Once stabilized, pressure should remain greater than 2.8 PSI for 30 minutes. • When the test passes, reduce the pressure to 0.5 PSI. • If the test fails, further investigation is required. Notify Supervision.

EMP INSPECTION
Network Unit
Required Repairs

STRUCTURE / LOCATION NO.	INSPECTED BY	DATE
STREET ADDRESS	TOWN	STATE

NOTE:- Enter “as found” data in upper box and “as left” data in lower box.

DEVICE	PRESSURE	OIL			
		LEVEL	OIL Added		TEMPERATURE
TRANSFORMER			Amount		
			Date		
PRIMARY SWITCH			Amount		
			Date		
PROTECTOR					

PROTECTOR AMPERAGE	Phase A	Phase B	Phase C
AS FOUND			
MAXIMUM			

AS LEFT PROTECTOR COUNTER READING	

REQUIRED CORRECTIVE WORK

EMP INSPECTION
Required Repairs

STRUCTURE / LOCATION NO.	INSPECTED BY	DATE
STREET ADDRESS	TOWN	STATE

REQUIRED CORRECTIVE WORK

APPENDIX 13

UNDERGROUND NETWORK PROTECTORS

EVERSOURCE	EVERSOURCE MAINTENANCE PROGRAM ELECTRIC OPERATIONS ORGANIZATION

Network Protectors

Document Number:	Issued Date:	Revised Date:	Revision:	Applicability:
EMP 5.29	06-Mar-13	01-Jul-15	3	All

Scope:

This document details the maintenance of Network Protectors.

Safety:

Providing a work environment, free of recognized hazards is a value at Eversource. Therefore, prior to the start of any work, ensure that you are familiar and knowledgeable with all Eversource Safety Rules, Policies and Procedures that are applicable to the work and tasks at hand and perform a job brief at the job site, prior to commencing work. PPE requirements to protect the worker shall be followed as required in the Eversource Employee Safety Manual.

Rev No.	Description	Date
3	1. Changed names of the Owner, SME, and Approvers on the Signature page, as required. 2. Incorporated the following global replacements: - NU Maintenance Manual replaced by Eversource Maintenance Program. - CL&P replaced by Eversource Connecticut. - WMECO replaced by Eversource Western Massachusetts. - PSNH replaced by Eversource New Hampshire. - NSTAR replaced by Eversource Eastern Massachusetts. - NUMM replaced by EMP. 3. Incorporated the following global replacements: - NU Safety Manual replaced by Eversource Employee Safety Manual.	July 1, 2015
2	1. Changed names of Owner, SME and approvers on the signature page, as required. 2. Added Note 3 to Table 1allowing the extension of the Major Maintenance frequency to 4 yrs for units remotely monitored and alarmed on a continuous basis, utilizing SCADA or equivalent, for Pressure, Temperature, Voltage, Current and Oil Level 3. Incorporated NSTAR only instructions	January 2, 2015
1	1. Deleted detail steps as they are now included in Instruction 6.29. 2. Changed names of approvers on the signature page, as required. 3. Removed references to TD 871 as it is being obsoleted	March 6, 2013
0	Original Document	---

EVERSOURCE	EVERSOURCE MAINTENANCE PROGRAM ELECTRIC OPERATIONS ORGANIZATION

Network Protectors

Document Number:	Issued Date:	Revised Date:	Revision:	Applicability:
EMP 5.29	06-Mar-13	01-Jul-15	3	All

Approved by: _____ Date: 01-Jun-15
Jeffrey S. Franson
Director, Substation Operations

Approved by: _____ Date: 29-May-15
Charles E. Fontenault
Director, Division Operations

Approved by: _____ Date: 30-May-15
Robert Billet
Director, Stations Operations

Approved by: _____ Date: 03-Jun-15
James C. Eilenberger
Director, Energy Delivery

Approved by: _____ Date: 27-May-15
Bliss A. Young
Director, Asset Management

Approved by: _____ Date: 28-May-15
Michael G. Waggoner
Director, Engineering Services

Table of Contents

Section		Page
1.0	Introduction	4
2.0	Reference Documents	4
3.0	Facilities/Equipment	5
4.0	Definitions	5
5.0	General	5
6.0	CMD Maintenance Categories	6
7.0	CM-22 Maintenance Categories	6
8.0	CM-52 Maintenance Categories	7
9.0	MG 8/9 Maintenance Categories	8
10.0	Network Protectors Maintenance Basis Documentation	9
11.0	Failure Findings	12
12.0	Condition-Based Monitoring	12

1.0 Introduction

1.1 A network protector is an air circuit breaker and relay scheme (network protector mechanism) connected between the secondary side of a network transformer and the secondary network grid. The network protector is designed to perform the following three basic functions.

1.1.1 Open on reverse power (flow of energy from the network into the transformer)

1.1.2 Close on system conditions that allow for power flow into the secondary networks.

1.1.3 Close on a de-energized secondary network.

1.2 Incorporated in the design of the network protector are network protector fuses. These fuses provide backup protection should the network protector fail to open during faults on the primary feeder.

1.3 Network protectors fall under two categories – Live Front and Dead Front designs.

1.3.1 **Live Front Network Protectors** have exposed energized parts. The live front network protectors require the removal of the network protector fuses and transformer links to rack the breaker mechanism out of the enclosure to perform maintenance activities, (CM22 and MG8/9 styles). This type of network protector utilizes a motor close mechanism to close the network protector contacts.

1.3.2 **Dead Front Network Protectors** have all energized parts insulated or isolated. This type of protector uses a spring charge, to close the network protector contacts (CMD and CM52 styles). The spring is charged by a motor, which then releases the stored energy to close the protector contacts.

1.4 The maintenance requirements for the following network protectors are provided in separate sections for each model.

1.4.1 CMD

1.4.2 CM-22

1.4.3 CM-52

1.4.4 MG 8/9

NOTE: All specific maintenance requirements that are followed by a triangle symbol "▲" are explained in the Network Protectors Maintenance Basis Documentation section of this chapter.

2.0 Reference Documents

29CFR 1910	OSHA General Industry Regulations
29CRR 1926	OSHA Construction Industry Regulations
C57.12.44-2005	IEEE Standard Requirements for Secondary Network Protectors
NEMA AB-4-2003	NEMA Standards Publication, Guidelines for Inspection and Preventive Maintenance of Molded Case Circuit Breakers Used in Commercial and Industrial Applications
ANSI C37.50-1989	American National Standard, Switchgear Low Voltage

AC Power Circuit Breakers Used in Enclosures – Test Procedures

Electrical Power Equipment Maintenance and Testing, Paul Gill

National Electric Safety Code (NESC) IEEE C2 2007

3.0 Facilities/Equipment

3.1 Street and Spot Networks

4.0 Definitions

4.1 The abbreviations used for the intervals are:

4.1.1 **A/R** = As Required

4.1.2 **CTD** = Capacitive Trip Device

4.1.3 **DTA** = Direct Trip Actuator

4.1.4 **R** = Required

4.1.5 **M** = Month, i.e. 1M = 1 Month

4.1.6 **Y** = Year, i.e. 2Y = 2 Years

5.0 General

5.1 In Table 1, the intersection of the row and column indicate the inspection or maintenance interval for the equipment in the column heading. For example, the interval for a Major Maintenance on the CM-22 is 2Y (or 2 years).

Table 1 – Network Protectors Maintenance Intervals

Network Protector Maintenance Schedule	Network Protector Type				
	CMD – DTA or CTD Actuation Section 5		CM-22 Section 6	CM-52 Section 7	MG 8/9 Section 8
	DTA	CTD			
PM Task					
Condition Monitoring					
Any defects found during Routine Inspection, such as worn contacts, rust, failed pressure test, excessive operation count, etc.	A/R	A/R	A/R	A/R	A/R
Time-Directed					
Routine Inspection – Energized ▲	1Y	1Y	1Y	1Y	1Y
Major Maintenance – De-Energized ▲ (Note 3)	2Y **Note 1**	2Y	2Y	4Y (2Y) **Note 2**	2Y
Condition Based					
Major Maintenance – All Models	Counter over 500 Ops since last Annual Inspection				
Failure Finding					
Equipment Failure Reporting System used by your region (EFRS, UPER, Cascade etc.)	R	R	R	R	R
Failure Investigation	A/R	A/R	A/R	A/R	A/R
Scheduling Requirements					
Perform together with Network Transformer Maintenance					

NOTE: 1.Convert all DTA actuators to CTD at the NP's next Major Maintenance (unless the NP is being taken out of service). ▲ Conversion kits with instructions are available: Stock Code 0000446777 for 480 volt CMDs and 0000446778 for 216 volt CMDs.

2. For the CM- 52 Network Protectors, a Major Maintenance shall be considered based upon the number of operations, 2Y after the initial installation date and subsequently every 4Y.

3. For units which are remotely monitored and alarmed on a continuous basis, utilizing SCADA or equivalent, for Pressure, Temperature, Voltage, Current and Oil Level the major maintenance may be extended to a four (4) year frequency.

6.0 CMD Maintenance Categories

6.1 Condition Monitoring

6.1.1 See Section 11

6.2 Time Directed

6.2.1 CMD Routine Inspection – Energized ▲

.1.1. Refer to either EMP Instruction 6.29B or EMP Instruction 6.29BB (EMA) for details

6.2.2 CMD Major Maintenance ▲

.2.1. Refer to either EMP Instruction 6.29B or EMP Instruction 6.29BB (EMA) for details

6.2.3 Failure Finding

.3.1. Determine the condition of the aircraft warning lights A failure report shall be completed for any network protector failure in the specific equipment failure reporting system used by each operating company (EFRS, UPER, Cascade, etc.).

.3.2. Analysis of network protector failures should be performed when deemed necessary by Distribution Standards.

6.2.4 CMD References:

.4.1. Eaton, Cutler Hammer, Type CMD Network Protectors 1875 to 3000A, Instruction Bulletin I.B. 35-552-G

.4.2. Eaton Network Protector Training Seminar, Handout

.4.3. IEEE Standard Requirements for Secondary Network Protectors, IEEE std. C57.12.44-2006.

7.0 CM-22 Maintenance Categories

7.1 Condition Monitoring

7.1.1 See Section 11

7.2 Time Directed

7.2.1 CM-22 Routine Inspection – Energized ▲

.1.1. Refer to either EMP Instruction 6.29DA or EMP Instruction 6.29DB (EMA) for details

7.2.2 CM-22 Major Maintenance ▲

.2.1. Refer to either EMP Instruction 6.29DA or EMP Instruction 6.29DB (EMA) for details

7.2.3 Failure Finding

.3.1. A failure report shall be completed for any network protector failure in the specific equipment failure reporting system used by each operating company (EFRS, UPER, Cascade, etc.).

.3.2. Analysis of network protector failure should be performed when deemed necessary by Distribution Standards

7.2.4 CM-22 References:

.4.1. Richards NP Instruction Manual, Type 313NP, 800 to 3500 Amperes, IM 1223-001B.

.4.2. Eaton Network Protector Training Seminar, Handout

.4.3. IEEE Standard Requirements for Secondary Network Protectors, IEEE std. C57.12.44-2006

.4.4. Richards Manufacturing Network Protector Training Book

.4.5. Eversource Employee Safety Manual

8.0 CM-52 Maintenance Categories

8.1 Condition Monitoring

8.1.1 See Section 11

8.2 Time Directed

8.2.1 CM-52 Routine Inspection – Energized ▲

.1.1. Refer to either EMP Instruction 6.29AA or EMP Instruction 6.29AB (EMA) for details

8.2.2 CM-52 Major Maintenance ▲

.2.1. Refer to either EMP Instruction 6.29AA or EMP Instruction 6.29AB (EMA) for details

8.2.3 Failure Finding

.3.1. A failure report shall be completed for any network protector failure in the specific equipment failure reporting system used by each operating company (EFRS, UPER, Cascade, etc.).

.3.2. Analysis of network protector failure should be performed when deemed necessary by Distribution Standards

8.2.4 CM-52 References:

.4.1. Eaton, Cutler Hammer, Type CM52 Network Protectors 1875 to 3000A, Instruction Bulletin I.B. 35-552-G

.4.2. Eaton Network Protector Training Seminar, Handout

.4.3. IEEE Standard Requirements for Secondary Network Protectors, IEEE std. C57.12.44-2006

9.0 MG 8/9 Maintenance Categories

9.1 Condition Monitoring

9.1.1 See Section 11

9.2 Time Directed

9.2.1 MG 8/9 Routine Inspection – Energized ▲

.1.1. Refer to either EMP Instruction 6.29CA or EMP Instruction 6.29CB (EMA) for details

9.2.2 MG 8/9 Major Maintenance ▲

.2.1. Refer to either EMP Instruction 6.29CA or EMP Instruction 6.29CB (EMA) for details

9.2.3 Failure Finding

.3.1. A failure report shall be completed for any network protector failure in the specific equipment failure reporting system used by each operating company (EFRS, UPER, Cascade, etc.).

.3.2. Analysis of network protector failure should be performed when deemed necessary by Distribution Standards

9.2.4 MG 8/9 References:

.4.1. Richards NP Instruction Manual, Type 313NP, 800 to 3500 Amperes, IM 1223-001B.

.4.2. GE Network Protector Maintenance Manual, MG8 Network Protector

.4.3. Eaton Network Protector Training Seminar, Handout

.4.4. IEEE Standard Requirements for Secondary Network Protectors, IEEE std. C57.12.44-2006

10.0 Network Protectors Maintenance Basis Documentation

10.1 The maintenance activities and their schedules are based on industry experience, manufacturer's recommendations, and recommendations from the Maintenance Standardization Working Group (representing all three operating companies), and the subject matter expert. Specific determinations are provided for each of the four NP types.

Table 2 – CMD Maintenance Activity Basis

Requirement	Basis
Perform a 1-Year Routine Inspection - Energized.	The manufacturer recommends a Major Maintenance at this interval, but an annual Routine Inspection has been proven to find minor defects before they affect protector performance.
Perform a 2-Year Major Maintenance.	The Mfr recommends a 1-Year Major Maintenance interval, but many years of historical data have proven that a 2-Year Major Maintenance interval provides acceptable equipment performance.
Perform Insulation Resistance Test of the NP mechanism only.	The manufacturer recommends performing dielectric tests as described in Bulletin I.B. 35-500-1E on the enclosure and the NP mechanism. Performing dielectric tests on the transformer bus and network bus within a network protector enclosure is impractical in the field due to the fact that the enclosure bus (network and transformer) would have be isolated from the network secondaries and transformer secondary terminals. The Eaton Network Protector Training Seminar indicated that an insulation resistance test should be performed on the network protector mechanism to indicate the condition of the insulating material in the protector. Insulation resistance tests have recently been implemented at Eversource and have identified a number of easily correctable conditions helping to improve reliability of the protectors.
Adjust contact pressure 1 month after initial installation.	The mechanism GPO-3 structure will relax and may result in a change of contact pressure, causing the protector not to open completely. This is recommended by the manufacturer. No new installations of the CMD NP are planned at this time.
Check the operations counter 1 month after initial installation at time of the contact pressure check.	The manufacturer recommends a check of the operations counter 30-90 days following initial installation. The operations counter can indicate if the protector is operating excessively. The 1 month interval is satisfactory and saves the second post-installation inspection. No new installations of the CMD NP are planned at this time.
Replace all CMD DTA actuators with Capacitor Trip Device (CTD) at 1st Major Maintenance following their identification.	The manufacturer recommends this retrofit to improve reliability of the Network Protector. DTA actuators have a failure history with Eversource and at least one other utility. CTD actuators are proven to be more reliable.
Perform a Major Maintenance if the protector has operated over 500 times in an year.	A high number of network protector operations may indicate a problem with the network protector, requiring maintenance, relay adjustment, etc. The majority of network protectors relays installed at Eversource are electromechanical relays. Electromechanical relay setpoints are known to change over time and may require adjustment to ensure proper operation of the network protector. This requirement ensures that the relays are operating correctly and are properly adjusted for system conditions.

Table 3 – CM-22 Maintenance Activity Basis

Requirement	Basis
Perform a 1-Year Routine Inspection - Energized	The manufacturer recommends a Major Maintenance at this interval, but based on Eversource's operating experience, an annual Routine Inspection has been proven to find minor defects before they affect protector performance.
Perform a 2-Year Major Maintenance.	The Mfr recommends a 1-Year Major Maintenance interval, but many years of historical data have proven that a 2-Year Major Maintenance interval provides acceptable equipment performance.
Perform Insulation Resistance Test of the NP mechanism only.	The manufacturer recommends performing dielectric tests as described in Bulletin I.B. 35-500-1E on the enclosure and the NP mechanism. Performing dielectric tests on the transformer bus and network bus within a network protector enclosure is impractical in the field due to the fact that the enclosure bus (network and transformer) would have to be isolated from the network secondary and transformer secondary terminals. The Eaton Network Protector Training Seminar indicated that an insulation resistance test should be performed on the network protector mechanism to indicate the condition of the insulating material in the protector. Insulation resistance tests have recently been implemented at Eversource and have identified a number of easily correctable conditions helping to improve reliability of the protectors.
Perform a Major Maintenance if the protector has operated over 500 times in an year.	A high number of network protector operations may indicate a problem with the network protector, requiring maintenance, relay adjustment, etc. The majority of network protectors relays installed at Eversource are electromechanical relays. Electromechanical relay setpoints are known to change over time and may require adjustment to ensure proper operation of the network protector. This requirement ensures that the relays are operating correctly and are properly adjusted for system conditions.

Table 4 – CM-52 Maintenance Activity Basis

Requirement	Basis
Perform a 1-Year Routine Inspection - Energized.	This is based on the manufacturer's recommendation and company experience.
Perform Major Maintenance on a 4-Year interval.	The manufacturer recommends a 5-Year interval for Major Maintenance. The first Major Maintenance is performed 2Y after installation to ensure it was properly installed. After that, the 4-Yr cycle allows us to better coordinate maintenance scheduling with other system maintenance.
Perform Insulation Resistance Test of the NP mechanism only.	The manufacturer recommends performing dielectric tests as described in Bulletin I.B. 35-500-1E on the enclosure and the NP mechanism. Performing dielectric tests on the transformer bus and network bus within a network protector enclosure is impractical in the field due to the fact that the enclosure bus (network and transformer) would have to be isolated from the network secondary and transformer secondary terminals. The Eaton Network Protector Training Seminar indicated that an insulation resistance test should be performed on the network protector mechanism to indicate the condition of the insulating material in the protector. Insulation resistance tests have recently been implemented at Eversource and have identified a number of easily correctable conditions helping to improve reliability of the protectors.
Perform a Major Maintenance if the protector has operated over 500 times in an year.	A high number of network protector operations may indicate a problem with the network protector, requiring maintenance, relay adjustment, etc. The majority of network protectors relays installed at Eversource are electromechanical relays. Electromechanical relay setpoints are known to change over time and may require adjustment to ensure proper operation of the network protector. This requirement ensures that the relays are operating correctly and are properly adjusted for system conditions.

Table 5 – MG 8/9 Maintenance Activity Basis

Requirement	Basis
Perform a 1-Year Routine Inspection - Energized	Richards Mfg recommends cycle count checks at 24 hours, 48 hours, 1 week, 1 month, 6 months and yearly following initial installation. Based on experience, it has been determined that annual inspections are adequate for detecting excessive cycling.
Perform a 2-Year Major Maintenance.	The Mfr recommends a 1-Year Major Maintenance interval, but many years of historical data have proven that a 2-Year Major Maintenance interval provides acceptable equipment performance.
Perform insulation resistance tests	Richards Mfg NP instruction Manual, Type 137, IM 1224-001A indicates hi-pot testing is not required on MG8/9 NPs. However, CL&P has been performing insulation resistance testing on MG8/9, CM22 and CMD style protectors and have found that insulation resistance testing (Megger) has identified a number of degraded conditions, including degraded arc chutes, and backboards. Repair of these conditions helps to maintain a safe and reliable system.
Perform a Major Maintenance if the protector has operated over 500 times in an year.	A high number of network protector operations may indicate a problem with the network protector, requiring maintenance, relay adjustment, etc. The majority of network protectors relays installed at Eversource are electromechanical relays. Electromechanical relay setpoints are known to change over time and may require adjustment to ensure proper operation of the network protector. This requirement ensures that the relays are operating correctly and are properly adjusted for system conditions.

11.0 Failure Findings

11.1 Failures of network protectors shall be documented in the equipment failure reporting system used by the individual operating companies (EFRS, UPER, Cascade, etc.).

11.2 Analysis of a failed network protector may be performed as deemed necessary by Distribution Standards.

12.0 Condition-Based Monitoring

12.1 Condition-based maintenance can be developed if additional monitoring of the network protector is implemented. This may help to lengthen current maintenance intervals beyond the current cycles. The Cutler Hammer MPCV network protector relays, which are installed in the CM-52 network protectors, have communication capability built in, that can be adapted to and monitored by the SCADA system. The CM-52 network protectors were specified with a pressure switch to indicate a loss of pressure within the submersible enclosure. This can trigger a condition-based maintenance activity and allow the unit to be repaired shortly after the defect occurs, as opposed to letting sit un-repaired for the remainder of its inspection interval. This could protect the unit from further damage and add to the reliability of the network.

12.2 Many Utilities have dedicated feeders supplying only their secondary networks. In a dedicated network system, the operation of network protectors can be verified by de-energizing a single network feeder to determine if all network protectors open. This can provide an indication that the network protectors are operational, which may, with other improvements, be able to extend the maintenance cycle. Northeast Utilities has added radial loads off of the network feeders, thus creating non-dedicated network feeders. Nondedicated network feeders would require significant switching to be able to deenergize a feeder to check the operation of network protectors. As such feeders supplying networks would need to be reconfigured to create a dedicated network to facilitate this operational check.

12.3 Many parameters can be monitored to develop condition-based maintenance including the following:

12.3.1 Network protector pressure

12.3.2 Transformer voltages

12.3.3 Phase angle

12.3.4 Pumping/Counter

12.3.5 Sump pump alarm

12.3.6 Network voltages

12.3.7 Protector currents

12.3.8 Protector status (open or closed)

12.3.9 General trouble alarm

12.3.10 Protector temperature

EVERSOURCE MAINTENANCE PROGRAM	Document Number: **6.29** **Rev. 2** Document Name: **Network Protector Routine Inspection Energized**
Owner Name:	Henry J. Matuszak
SME Name:	C. Cory Morgan
Effective Date:	July 1, 2015

Approvals:

Connecticut:
Name: Jeffrey S. Franson _____
Title: Director – Maintenance
Date Signed: **5-02-2015**

Name: Todd M. Blosser _____
Title: Director – Division Operations
Date Signed: **5-01-2015**

Eastern Massachusetts:
Name: Robert P. Billet _____
Title: Director – Station Operations
Date Signed: **5-13-2015**

New Hampshire:
Name: James C. Eilenberger _____
Title: Director – Energy Delivery
Date Signed: **5-12-2015**

Western Massachusetts:
Name: Robert S. Coates _____
Title: Vice President – Electric Field Operations
Date Signed: **5-07-2015**

Utility Services:
Name: Michael G. Waggoner _____
Title: Director – Distribution Engineering
Date Signed: **5-10-2015**

Ensure you are using the current revision by verifying it against the controlled electronic copy located on the Distribution Engineering Standards Bookshelf or the Regulated Businesses Policies and Procedures Lotus Notes Database.

Network Protector – Routine Inspection - Energized

Purpose

The Purpose of this inspection is to identify any potential operational problems with Network Protectors prior to their major maintenance cycle. This inspection is intended to be performed with the network protector door closed.

CAUTION

1. No modifications to network protectors shall be made, either temporary or permanent, without prior approval of the Distribution Engineering Department.
2. Stop the job, place equipment in a safe condition, and contact Supervision if the process does not proceed as expected, if unusual situations occur during the performance of the process, or any significant problems occur during maintenance activities.

Before You Begin

Prior to assigning work on network protectors, Supervision shall:

1. Prior to assigning personnel to perform “Work” on a network protector, ENSURE the person(s) responsible for performing the “Work” is fully qualified in accordance with operating company requirements
2. Ensure that all employees are properly trained and qualified to perform this work, and that all appropriate PPE and safety requirements are met, including but not limited to those defined within the following documents:
   - TD 211, “When to Wear FR Clothing”
   - TD 952, “Protection of Personnel Entering Enclosed Spaces” (Connecticut and Western Massachusetts only)
   - TD 955, “Confined Space Requirements”
   - Eversource Employee Safety Manual
   - TD -877 Managing Arch Flash Hazards on CL&P Distribution Facilities (Connecticut ONLY)
3. Ensure those performing the work are aware that of the following PPE requirements whenever working in Underground Vaults & Manholes:
   - Safety Glasses with side shields
   - EH (Electrical Hazard) rated boots
   - High Voltage gloves
   - FR (flame resistant) clothing, as specified in TD 211

4. Whenever “Work” is performed on a network unit as defined in paragraph 5 of this procedure, the following PPE is required :
   - Protective Arc Flash Hood (Beehive), (Stock Code 442151) or company approved equivalent.
   - Safety glasses with side shields
   - Minimum of low voltage (Class 0) rubber gloves (use of High Voltage Rubber Gloves is preferred)
   - Double layer of full body FR Clothing (i.e., FR shirt and pants plus full body FR coverall)
5. All persons performing “Work” on Network Units as defined below and those persons within the immediate work zone while “Work” is being performed shall wear at minimum double layer full body FR clothing, minimum 25 cal. FR rated hood (beehive type with built-in arc rated face shield), safety glasses and, minimum of low voltage (Class 0) rubber gloves (high voltage rubber gloves preferred). As defined in this document, “Work” includes the following tasks:
   - Installing or removing transformer links and network fuses
   - Rolling or racking out the protector
   - Phasing the unit
   - Connecting test leads to an energized bus
   - Obtaining transformer and network voltages
   - Test probe usage prior to installing links and network fuses
   - Or any other work performed inside the network protector enclosure with the transformer and/or network bus energized
6. Prior to accessing manholes and vaults to investigate, inspect or work on a network unit in a single transformer vault, the maintenance records for that unit will be reviewed for condition of the unit.
   - If the records indicate that a major maintenance was completed within the maintenance cycle per the Northeast Utilities Maintenance Manual and the unit has no major deficiencies, work may commence on the network transformer with the unit energized following all applicable company procedures and the protocols. (Applicable only to Connecticut and Western Massachusetts)
   - If the records do not indicate that a major maintenance was completed on the unit within the maintenance cycle per the Eversource Maintenance Manual or major deficiencies have not been addressed, then the primary feed to the unit will be de-energized prior to commencement of maintenance work. The maintenance work on the unit will then take place with the unit de-energized, and only the secondary cables will be energized back from the street grid during the work. This will only apply to single transformer vault units.

- The deficiencies described below, require the primary circuit to be de-energized in accordance with the operating policy.
    - Major maintenance not performed within the maintenance cycle required by the Eversource Maintenance Manual.
    - Low oil level (below sight glass / gauge level) in primary switch or transformer or dielectric quality of oil below acceptable level
    - Any other significant defect or abnormal condition that may affect the safe operation of the network protector or transformer, such as, free standing water in the primary switching or transformer oil sample, excessive damage / corrosion in the network protector or other defect that requires immediate repair to return to service.

7. For cases where multiple network transformers exist in a vault, it will generally not be possible to de-energize all of those units for a variety of reasons. Therefore, prior to working on a network transformer, where multiple network transformers exist in a vault, maintenance records shall be reviewed for major deficiencies and/or major maintenance completion within the maintenance cycle per the Eversource Maintenance Manual prior to working in the vault.
    - If records indicate that major maintenance for all transformers within the vault is up-to-date, and that there are no major deficiencies, then work may proceed.
    - If major deficiencies or major maintenance was not completed, management will jointly work with employees for the appropriate steps to follow.
8. With the exception of the commissioning of a new network unit, 480V/277V network units shall have major maintenance completed with the primary de-energized. 216V/125V network units may be worked on with the primary energized as long as no oil work (i.e. oil sampling, topping off and/or retro-filling) is being performed.
    - Network major maintenance that includes any oil work (i.e. primary equipment oil sampling, topping off or the like) shall only be completed with the primary equipment de-energized
9. Job Setup: Work zones, requirements for various jobs, switching requirements. All arrangements should be completed or setup prior to beginning the job. These include cones, signage, and police or traffic control. Check holes prior to entry for cleaning needs, i.e. pumping water, debris, contaminates, visible oil, and providing samples for lab analysis.
10. Review the manufacturer's manuals for all safety notations (Danger, Warnings, and Cautions), as needed. These may be in sections of the manual other than with the instructions.
11. Supervision shall ensure the assigned workers have primer, paint, and any additional material needed for cleaning and preservation of the exterior of the network protector prior to departing the work center.

12. Prepare the vault for entry.
    - Check for dangerous atmospheric conditions before entering the vault using company-approved atmospheric sampling equipment
    - Ventilate the vault, if required, in accordance with the Eversource Employee Safety Manual.
    - Remove any standing water or debris from the vault in accordance with ENVIROWI-0105 or company-specific requirements, as required. This is located in the Environmental and Facility Procedures section of the Distribution Engineering Standards Bookshelf.

Procedure

1. Review the manufacturer's manuals for all safety notations (Danger, Warnings, and Cautions). These may be in sections of the manual other than with the instructions.
2. Prepare the vault for entry.
   a) Check for dangerous atmospheric conditions before entering the vault.
   b) Ventilate the vault, if required, in accordance with the Eversource Employee Safety Manual.
   c) Remove any standing water or debris from the vault in accordance with ENVIROWI-0105 or company-specific requirements.
3. Clean the exterior of the network protector to facilitate inspection and maintenance of the network protector. Cleaning shall include:
   a) Removing debris from the top of the enclosure.
   b) Cleaning all outside surfaces of the enclosure to facilitate corrosion inspection and internal inspections through the network protector enclosure windows.
   c) Check High and Low side grounds.
   d) Check the ground connection between the network protector ground pad and the transformer ground pad.

> **NOTE**
> When painting is required, use proper ventilation and respiratory equipment.

4. Inspect the network protector enclosure for chipped, cracked or missing paint, corrosion, etc. Remove any loose paint and/or rust with a wire brush and repaint those areas to prevent further corrosion.
5. Inspect the interior of the network protector through the enclosure door windows for abnormal conditions including but not limited to the following:
   - Signs of moisture
   - Blown fuses
   - Signs of arcing or soot
   - Noisy operation of any electro-mechanical relays
   - Network protector relay failure
     - Check the condition of electro-mechanical relays, when possible.
     - ETI relays have a scrolling alphanumeric LED display. An ETI relay with no scrolling display indicates a failed relay.
     - MPCV relays have three lights: **Fail**, **Float**, and **Trip and Close**. A failed relay will have the **Fail** light lit.

6. Record the current value on the operations counter. If the number of operations is greater than 500 since the last inspection, notify Supervision.

7. **For CM-52 network protectors only**, verify that all IDM (Indicating Diagnostic Module) LEDs are illuminated. See Figure 1.



Figure 1 – The IDM Module

Yellow “Power On”	Indicates the presence of normal power input to the IDM.
Yellow “Motor OK”	Indicates a healthy motor and close circuit.
Red “Motor Enabled”	Indicates that the supply voltage is at or above 73% of nominal and the motor has sufficient power to charge the breaker.
Yellow “IDM Trip Enabled”	Indicates that the IDM trip portion of the circuit is healthy and is ready to implement a trip, if such conditions should exist.

- If the LED is illuminated, the component is in working order.
- If the LED is not illuminated, the component or the wiring to the component is damaged.

CAUTION

For 480 volt network protectors, If the network protector is closed, **and** there is an exposed, energized copper bus or conductors, ***do not*** check for blown limiters or phase currents as required by steps 8 & 9.

8. Inspect for blown limiters, if applicable, as follows (**all protectors**):

   a) Determine if the network protector is open or closed.
      - o If the network protector is **open**, record this on the inspection form and continue to Step 9.
      - o If the network protector is **closed**, inspect for blown limiters by using a clamp on current transformer (CT) around each individual secondary cable.

   ❖ If the ammeter reads current, the limiter is good.

   ❖ If the limiter is open, record this condition and alert supervision of the need for corrective action.

NOTE

A blown limiter on the network protector secondary terminals may indicate a damaged or defective secondary cable that needs to be replaced.

9. Check and record the phase currents on each phase as follows:

   a) Determine if the network protector is **open** or **closed**.
      - o If the network protector is **open** go to step 10.
      - o If the network protector is **closed**, check and record current readings using one of the following methods:

   ❖ Measure current on each phase using a rope style current transformers around all conductors of each phase.

   or

   ❖ If an ETI relay is installed, read phase currents from the scrolling display on the relay.

10. Verify the protector enclosure is holding pressure using a pressure gauge/fill device.

   - If there is positive pressure, it indicates the protector is air-tight. Go on to the next step.
   - If it is not, perform a **leak check** on those network protectors with submersible enclosures as follows:
      a) Pressurize the enclosure with 5 PSI of dry nitrogen.
      b) Apply a soap solution to the door gaskets, enclosure penetrations, throat gaskets, operating handle gaskets, welds, etc.
      c) Let this sit for 10 minutes.
      d) Check for leaks by looking for soap bubbles. Fix any leaks if possible.
      e) Record any leaks on the inspection form and alert supervision.
      f) Reduce the pressure within the enclosure to (**see Addendum A**) psi.

Change Summary

Revision 1, Effective Date: **March 6, 2013**

Related Feedback: MS-0206

Rev. 1	Description of Changes
1.	Changed Approver names on the Signature page, as required.
2.	Removed all references to TD 871, which has been superseded.
3.	Moved caution to ensure proper ventilation when painting above the instruction to repaint, as required.
4.	Replaced reference to Accident Prevention Manual with reference to NU Systems Employee Safety & Health Handbook.
5.	Added caution as when NOT to check and record phase currents and clarified procedure for checking phase currents when the protector is closed.
6.	Revised ““Before You Begin” section to incorporate more detailed safety information previously contained in Network Operating Policy.

Revision 2 – Effective: **July 1, 2015**

Related Feedback – N/A

1.	Changed names of the Owner, SME, and Approvers on the Signature page, as required.
2.	Incorporated the following global replacements: • NU Maintenance Manual replaced by Eversource Maintenance Program. • CL&P replaced by Eversource Connecticut. • WMECO replaced by Eversource Western Massachusetts. • PSNH replaced by Eversource New Hampshire. • NSTAR replaced by Eversource Eastern Massachusetts. • NUMM replaced by EMP.
3.	Incorporated the following global replacements: • NU Safety Manual replaced by Eversource Employee Safety Manual.

Network Protector
Routine - Energized
NUMM 6.29-1
Guideline

	INSPECT	INSPECTION ATTRIBUTES
1	Clean the exterior of the network protector	• Removing debris from the top of the enclosure. • Clean all outside surfaces of the enclosure to facilitate corrosion inspection and internal inspections through the network protector enclosure windows.
2	Check Ground Connections	• Check High and Low side grounds. • Check the ground connection between the network protector ground pad and the transformer ground pad.
3	Inspect the network protector enclosure	Inspect the network protector enclosure for chipped, cracked or missing paint, corrosion, etc. Remove any loose paint and/or rust with a wire brush and repaint those areas to prevent further corrosion
4	Inspect the interior of the network protector	Through the enclosure door windows check for abnormal conditions, including but not limited to the following: • Signs of moisture • Blown fuses • Signs of arcing or soot • Noisy operation of any electro-mechanical relays
5	Network Protector Relay	Check the condition of electro-mechanical relays, when possible. • ETI relays have a scrolling alphanumeric LED display. An ETI relay with no scrolling display indicates a failed relay. • MPCV relays have three lights: **Fail**, **Float**, and **Trip and Close**. A failed relay will have the **Fail** light lit
6	Operations Counter	Record the current value on the operations counter. If the number of operations is greater than 500 since the last inspection, notify Supervision
7	Indicating Diagnostic Module	**For CM-52 network protectors only**, verify that all IDM (Indicating Diagnostic Module) LEDs are illuminated • If the LED is illuminated, the component is in working order. • If the LED is not illuminated, the component or the wiring to the component is damaged
8	Inspect Limiters	Inspect for blown limiters, if applicable, as follows (**all protectors**): Determine if the network protector is open or closed. • If the network protector is **open**, record this on the inspection form and go to step 10. • If the network protector is **closed**, inspect for blown limiters by using a clamp on current transformer (CT) around each individual secondary cable. 0 If the ammeter reads current, the limiter is good. 0 If the limiter is open, record this condition and alert supervision of the need for corrective action.
9	Phase Currents	Check and record the phase currents on each phase as follows: If the network protector is **closed**, check and record current readings using one of the following methods: ▪ Measure current on each phase using a rope style current transformers around all conductors of each phase. ▪ If an ETI relay is installed, read phase currents from the scrolling display on the relay.
10	Leaks	Verify the protector enclosure is holding pressure using a pressure gauge/fill device. • If there is positive pressure, it indicates the protector is air-tight. . • If it is not, perform a **leak check** on those network protectors with submersible enclosures per NUMM 6.29

NUMM INSPECTION
Network Unit
Required Repairs

STRUCTURE / LOCATION NO.	INSPECTED BY	DATE
STREET ADDRESS	TOWN	STATE

NOTE:- Enter "as found" data in upper box and "as left" data in lower box.

DEVICE	PRESSURE	OIL			
		LEVEL	OIL Added		TEMPERATURE
TRANSFORMER			Amount		
			Date		
PRIMARY SWITCH			Amount		
			Date		
PROTECTOR					

PROTECTOR AMPERAGE	Phase A	Phase B	Phase C
AS FOUND			
MAXIMUM			

AS LEFT PROTECTOR COUNTER READING	

REQUIRED CORRECTIVE WORK

NUMM INSPECTION
Required Repairs

STRUCTURE / LOCATION NO.	INSPECTED BY	DATE
STREET ADDRESS	TOWN	STATE

REQUIRED CORRECTIVE WORK

EVERSOURCE MAINTENANCE PROGRAM	Document Number: **6.29A** **Rev. 4** Document Name: **Network Protector CM-52 Major Maintenance**
Owner Name:	John Dipaola-Tromba
SME Name:	C. Cory Morgan
Effective Date:	July 1, 2017

Approvals: **Connecticut**:

Name: Anthony A. Anzalone Anthony A. Anzalone
Title: Director – Stations Operations
Date Signed: **06-26-2017**

Name: Charles E. Fontenault Charles E. Fontenault
Title: Director – Electric Field Operations
Date Signed: **06-27-2017**

Name: Jennifer A. Schilling _____
Title: Director – Strategy & Performance
Date Signed:

New Hampshire:

Name: James C. Eilenberger James C. Eilenberger
Title: Director – System Engineering
Date Signed: **06-26-2017**

Massachusetts:

Name: Paul R. Renaud Paul R. Renaud
Title: Vice President - Engineering
Date Signed: **06-27-2017**

:

Ensure you are using the current revision by verifying it against the controlled electronic copy located on the Distribution Engineering Standards Bookshelf or the Regulated Businesses Policies and Procedures Lotus Notes Database.

CM-52 Network Protectors – Major Maintenance

CAUTION

1. No modifications to network protectors shall be made, either temporary or permanent, without prior approval of the Distribution Engineering Department.
2. Stop the job, place equipment in a safe condition, and contact Supervision if the process does not proceed as expected, if unusual situations occur during the performance of the process, or any significant problems occur during maintenance activities.

Before You Begin

Prior to assigning work on network protectors, Supervision shall ensure:

1. That person(s) responsible for performing the “Work” are properly trained and fully qualified in accordance with operating company requirements.
2. That all PPE and safety requirements are met, including but not limited to those defined within the following documents:
   - TD 211, “When to Wear FR Clothing”
   - TD 877, “Managing Arch Flash Hazards on CL&P Distribution Facilities” (Connecticut ONLY)
   - TD 952, “Protection of Personnel Entering Enclosed Spaces” (Connecticut and Western Massachusetts only)
   - TD 955, “Confined Space Requirements”
   - CM52 Job Hazard Analysis (JHA – 2013-03)
   - Eversource Employee Safety Manual
3. That person(s) responsible for performing the “Work” are aware of the following PPE requirements whenever working in Underground Vaults & Manholes:
   - Hard Hat
   - Safety Glasses with Side Shields (or Goggles)
   - EH (Electrical Hazard) rated Footwear
   - Low and High Voltage Gloves
   - FR (Flame Resistant) Clothing, as specified in TD 211

4. That person(s) responsible for performing the "Work" on Network Units as defined in paragraph 4.1 below and those person(s) within the immediate work zone, shall at minimum wear the following PPE (Identified in JHA-2013-03):

- Hard Hat
- Protective Arc Flash Hood (Beehive), (Stock Code 507687) or 45 Calorie Rated Knit Hood with Goggles (Stock Code 506490) or, company-approved equivalent.
- Safety Glasses with Side Shields (or Goggles)
- Minimum of Low Voltage (Class 0) Rubber Gloves (use of High Voltage Rubber Gloves is preferred)
- Double layer of full body FR Clothing (i.e., FR shirt and pants plus full body FR coverall). Total FR calorie count must be equal to or greater than 16 calories.

4.1 "Work" on Network Units requiring PPE, identified in paragraph 4, includes the following activities:

- Installing or removing network fuses
- Rolling or racking out/in the breaker (operating mechanism cassette protector) (Except when using remote racking mechanism with control pendant)
- Phasing the unit at the network secondary buses (network fuses removed and breaker closed)
- Connecting test leads to an energized bus (Note: Always re-install compartment access shield after test leads are connected)
- Obtaining transformer and network voltages on secondary buses
- Installing or removing horizontal or vertical barrier boards, after the breaker is racked out to the "Disconnect" position, and fully drawn out.
- Any other work performed inside the network protector enclosure with the transformer and/or network bus energized prior to installation of the horizontal and vertical barrier boards.

NOTE
No breaker work is to be performed while the breaker is in "Test" or "Connect" positions.

5. That once the appropriate horizontal and vertical barrier boards are installed, person(s) responsible for performing the "Work" on Network Units as defined in paragraph 5.1 below and those person(s) within the immediate work zone shall at minimum wear the following PPE (Identified in JHA-2013-03):

- Hard Hat
- Full body FR clothing where the total FR calorie count must be equal to or greater than 8 calories
- Safety Glasses with Side Shields (or Goggles)
- Work gloves as needed

5.1 "Work" on Network Units requiring PPE, identified in paragraph 5, includes the following activities:

- Lowering or raising equipment and tools.
- Maintenance, Testing and Calibration of the breaker (To perform work on the breaker, the breaker has to be racked out to the "Disconnect" position)
- Wiring changes ioutside the energized area.

6. That prior to accessing manholes and vaults to investigate, inspect or work on a network unit in a single transformer vault, the maintenance records for that unit will be reviewed for condition of the unit.

- If the records indicate that a major maintenance was completed within the maintenance cycle per the Eversource Maintenance Manual and the unit has no major deficiencies, work may commence on the network transformer with the unit energized following all applicable company procedures and the protocols. (Applicable only to Connecticut & Western Massachusetts)
- If the records do not indicate that a major maintenance was completed on the unit within the maintenance cycle per the Eversource Maintenance Manual or major deficiencies have not been addressed, then the primary feed to the unit will be de-energized prior to commencement of maintenance work. The maintenance work on the unit will then take place with the unit de-energized, and only the secondary cables will be energized back from the street grid during the work. This will only apply to single transformer vault units.
- The deficiencies described below, require the primary circuit to be de-energized in accordance with the operating policy:
  - Major maintenance not performed within the maintenance cycle required by the Northeast Utilities Maintenance Manual.
  - Low oil level (below sight glass / gauge level) in primary switch or transformer or dielectric quality of oil below acceptable level.
  - Any other significant defect or abnormal condition that may affect the safe operation of the network protector or transformer, such as, free standing water in the primary switch or transformer oil sample, excessive damage / corrosion in the network protector or other defect that requires immediate repair to return to service.

NOTE

The secondaries remain energized to the protector enclosure unless existing deficiencies or conditions require that the secondaries be cut as jointly determined by Management and Field Personnel.

7. That prior to accessing manholes and vaults to investigate, inspect or work on network units where multiple network units exist in a vault, the maintenance records will be reviewed for condition of the units, major deficiencies and/or major maintenance completion within the maintenance cycle per the Eversource Maintenance Manual.
   - If records indicate that major maintenance for all network units within the vault is up-to-date, and that there are no major deficiencies, then work may proceed.
   - If major deficiencies exist or major maintenance was not completed, management will jointly work with Field Personnel for the appropriate steps to follow.
   - If any units within the vault have deficiencies, the primaries for the unit being worked on must be de-energized.

> **NOTE**
>
> For cases where multiple network units exist in a vault, it will generally not be possible to de-energize multiple units for a variety of reasons. Further actions will be determined jointly by Management and Field Personnel.

8. That with the exception of the commissioning of a new network unit, 480 V / 277 V network units shall have major maintenance completed with the primary de-energized. 216 V / 125 V network units may be worked on with the primaries energized as long as no oil work (i.e. oil sampling, topping off and/or retro-filling) is being performed.
   - Network major maintenance that includes any oil work (i.e. primary equipment oil sampling, topping off or the like) shall only be completed with the primary equipment de-energized.
9. That primaries are de-energized and grounded at every network transformer and/or protector whenever installing or replacing a network transformer or protector.
10. That Job Setup is performed. This may include working with local authorities to establish Work zones, determining requirements for various jobs, and switching requirements. All arrangements should be completed and set up prior to beginning the job, which include cones, signage, and police or traffic control. Check holes prior to entry for cleaning needs, i.e. pumping water, debris, contaminates, visible oil, and providing samples for lab analysis.
11. Review of the manufacturer's manuals for all safety notations (Danger, Warnings, and Cautions), as needed. These may be in sections of the manual other than with the instructions.
12. That person(s) responsible for performing the "Work" have primer, paint, and any additional material needed for cleaning and preservation of the exterior of the network protector prior to departing the work center.
13. That person(s) responsible for performing the "Work", prepare the vault for entry.
    - Check for dangerous atmospheric conditions before entering the vault using company-approved atmospheric sampling equipment.
    - Ventilate the vault, if required, in accordance with the Eversource Employee Safety Manual.

- Remove substantial water or debris from the vault in accordance with ENVIROWI-0105 or company-specific requirements, as required. This is located in the Environmental and Facility Procedures section of the Distribution Engineering Standards Bookshelf.

Network Protector Tools

The following fully insulated tools and equipment are available and may be useful for Network Protector service:

Tool Description	NU Stock Code
Wrench, Torque, 1/2” drive	572599
Wrench, Socket, extension bar, 1/2” drive, 12” long	572576
Socket size 3/4”, 1/2” drive, 6 pt.	571478
Wrench, Socket, T Handle, 33” long, 3/4” socket	572574
MPCV Relay Programmer	527762
Transformer Mating Gasket For CM52 Size: 800A – 2000A	547170
Transformer Mating Gasket For CM52 Size: 2500A – 3500A	547169
CM52-H-1 – Horizontal Barrier Board for CM52 Size: 800A-1875A	522382
CM52-V-1 – Vertical Barrier Board for CM52 Size: 800A-1875A	522383
CM52-H-2 – Horizontal Barrier Board for CM52 Size: 2000A-3000A	522384
CM52-V-2 – Vertical Barrier Board for CM52 Size: 2000A-3000A	522385
CM52-V-3 – Vertical Barrier Board for CM52 Size: 3500A	522386

The above listed wrenches may be available in other lengths by special order. The insulation from the time of original manufacture has been increased at the request of Eversource and stock code revisions will reflect “FI” for “Fully Insulated”.

NOTE

The orange surface insulation on these tools has a yellow undercoat. If yellow is detected on the surface due to cuts or punctures, the surface insulation has been compromised and the tool should be retired.

Opening the Network Protector Door

The CM-52 Network Protector is a dead-front design, rack in breaker and does not require the removal of fuses under normal maintenance activities. Testing of the CM-52 network protector should be performed with the breaker racked out and with appropriate horizontal and vertical barrier boards in place.

1. Vent the protector enclosure as follows:
   - Loosen the enclosure cover bolts on the side opposite from the operating handle (on the hinge side of the door) in order to vent the protector
2. Operate the network protector handle while standing to the side of the enclosure or as far away as possible from the front of the enclosure. Leave the handle in the "**OPEN**" position.
3. Verify that the network protector mechanism is in the **open** position as follows:
   - Inspect the network protector position indicator through the network protector enclosure window
   - Use a clamp or rope style current transformer (CT) around the conductors of each phase, verify that the current on each phase is zero. (Zero current may indicate that the breaker position is open or the network protector fuses or cable limiters are blown.)
   - Measure and record the secondary voltages
4. Loosen all enclosure cover bolts and pull the bolts back all the way and open the enclosure door.

NOTE

Be sure the bolts are away from the hinge when opening the door to prevent them from being damaged.

Racking Out and Isolating the Protector

REMINDER

Although it is not shown in some of the following figures, proper PPE must be worn while performing maintenance and testing on all Network Protectors.

1. Remove the levering crank mounted o the inside of the enclosure door. See Figure 1.

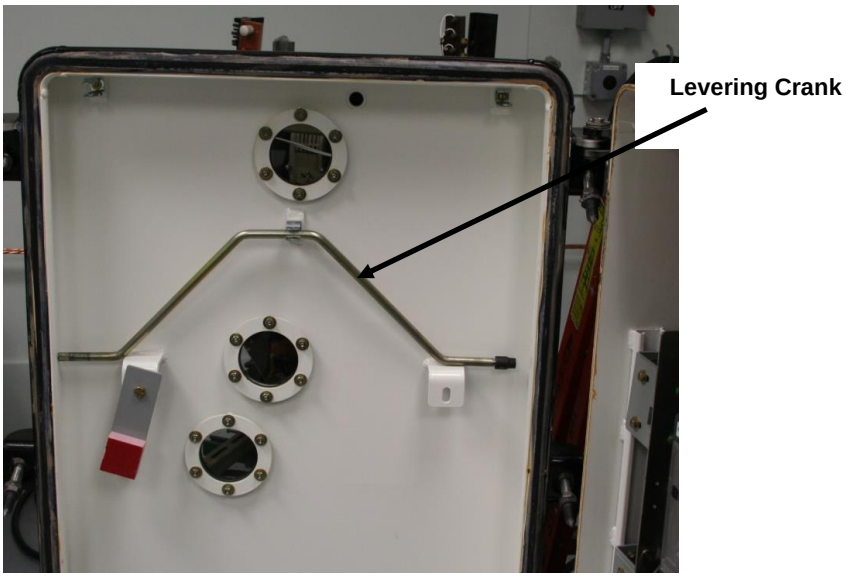

Figure 1 – The Levering Crank

2. Lift the levering crank access door and insert the end of the levering crank (3/8” square). See Figure 2.

> **NOTE**
>
> 480 volt units may have remote racking requiring a different technique.



Figure 2 – The Levering Crank Access Door

3. Turn the levering crank counter-clockwise.
   - The red window on the breaker will move from the **Connect** position to the **Test** position (yellow window). See Figure 3.



Figure 3 – The Test Position Indicator

   - The breaker will drop down slightly as it disconnects from the transformer and the network secondary bus work.
   - If the springs are charged, they will discharge as the breaker is racked out.
   - A full yellow position indicates that the breaker is disconnected from the Network and Transformer secondary bus.

4. Continue to crank until the crank stops. The green window will indicate that the unit is in **Disconnect** position. See Figure 4.



Figure 4 – The Disconnect Indicator

5. Locate the rail handles on each side of the breaker and pull the breaker evenly until it is completely drawn out.
6. Insert the appropriate "Horizontal" barrier board under the breaker as shown in figure 5.

> **NOTE**
>
> This step is applicable to CM52 enclosure sizes: 800A-1875A and 2000A-3000A. See Network Protector Tool Table.



Figure 5 – Installing the Horizontal Barrier Board

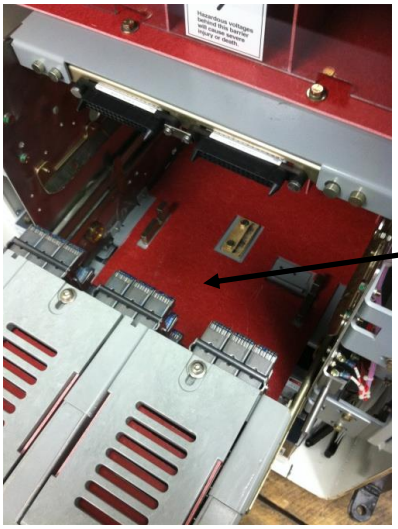

Figure 6 – Horizontal Barrier Board Correctly Installed

7. Install the appropriate “Vertical” barrier board behind the breaker as shown in Figure 7. The cutouts near the top of the board should rest on the sides of the enclosure frame, just behind the breaker.

NOTE
This step applies to all CM52 enclosure sizes. See Network Protector Tool Table.



Figure 7– Installing the Vertical Barrier Board



Figure 8 – Vertical Barrier Board Correctly Installed

8. Insert the 10mm socket on the crank and remove the front cover bolts. See Figure 9.



Figure 9 – Removing the Front Cover Bolts

CAUTION

To prevent the protector from tipping forward, place your hand on the center arc chute to steady breaker mechanism.

9. Pull down slightly on the charge handle and remove the cover.

Inspection of Arc Chutes and Contacts

10. Remove the arc chutes and inspect them to ensure the vents are free and clear. See Figure 10.



Figure 10 – The Arc Chutes

CAUTION

To prevent the protector from tipping forward, place your hand on the center arc chute to steady breaker mechanism.

11. Manually charge the breaker with the charge handle. See Figure 11.

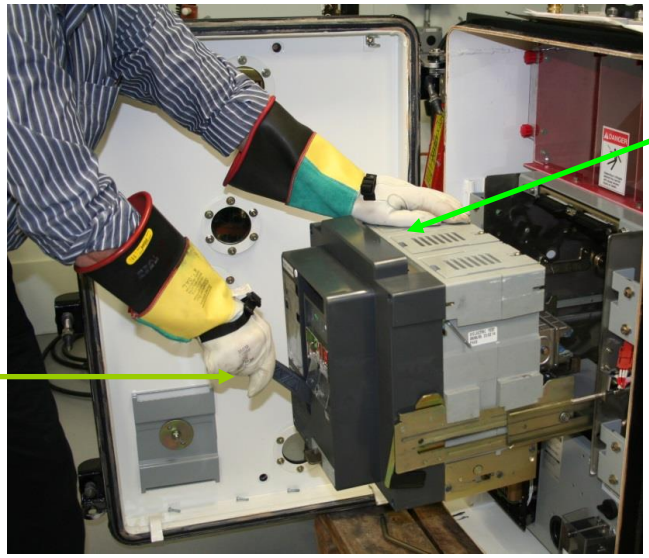

Figure 11 – Charging the Breaker

- The flag will indicate "Charged" after the closing spring is compressed.

12. Push the button labeled "CLOSE" to close the breaker. See Figure 12.

Note: If there is a plastic shield which covers the close button, carefully remove the hinged cover and remove and discard the plastic shield and reinstall the hinged covers.

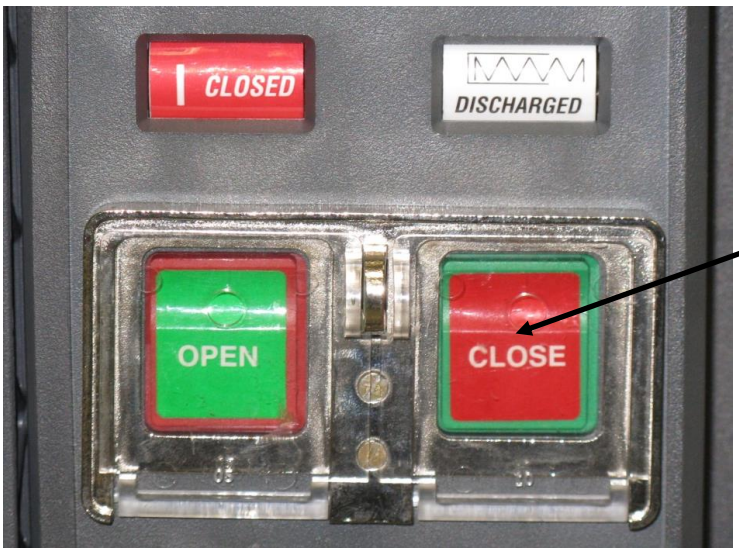

Figure 12 – The "CLOSE" Button

13. Check for contact wear. A side-by-side ledge acts as a contact wear indicator. Check the wear indicator by looking straight down into the arc chamber. See Figure 13.
    - If the ledge is covered by the back edge of the moving contacts, the contacts are in good condition.
    - If the ledge is not completely covered by the back edge of the moving contacts, replace the contacts.

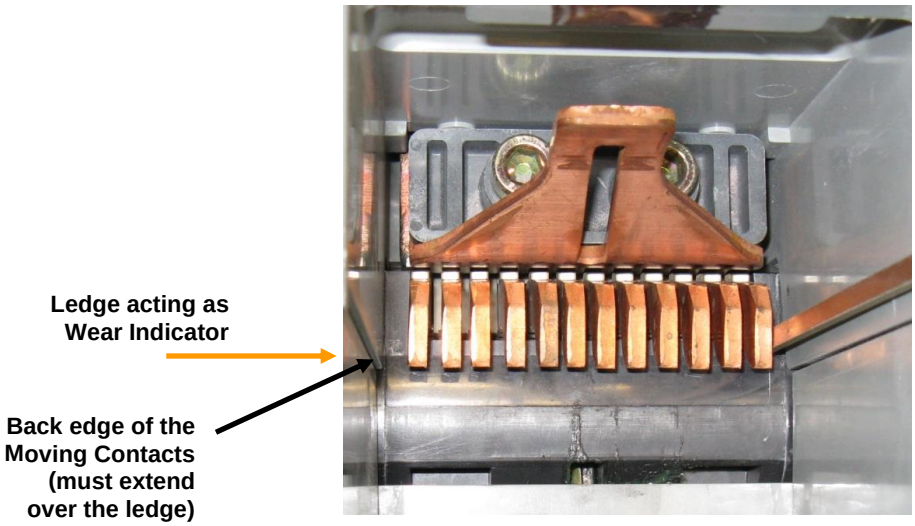

Figure 13 – Checking for Contact Wear

NOTE
There are no adjustments needed for contact pressure or lubrication required. Do not wipe away or add any grease or lubricant.

14. Push the button labeled “OPEN” to open the breaker.
15. Dress the arc contacts if there is black carbon residue from arcing, using only Scotch Brite. Do not use a file on the contacts.

Internal Visual Inspection:

1. Record the counter reading.
2. Check for any signs of liquid entry into enclosure, transformer throat, etc.
3. Check for indication of overheating.
4. Inspect the condition of the wiring. Look for frayed or damaged wires.

Test Sequence:

The next section is a series of tests defined to ensure proper operation at normal condition and at fault duty. It is important to perform the following tests in *this* order:

1. Manual Breaker Operation Test
2. Relay Testing
3. Ground Fault Test (480V Unit Only) (Account Executive to coordinate with Customer contact)

Test 1 – Manual Breaker Operation Test

CAUTION

To prevent the protector from tipping forward, place your hand on the center arc chute to steady breaker mechanism.

1. Operate the breaker manually while it is on rails by charging the breaker using the charging handle.
2. Once charged, press the CLOSE button.
3. Trip the breaker by pressing the TRIP button. Repeat these steps 5 times.

Relay Testing - Please see the following Relay Test Section for testing procedure.

Preparation for Tests 2 through 4

CAUTION
Test for zero voltage on the potential studs on the test switch as follows:

1. Use a Multi-meter to check for voltage on the stud positions labeled: See Figure 14.
   - N1, N2, N3 (See Figure 11.)
   - T1, T2, T3 (See Figure 11.)

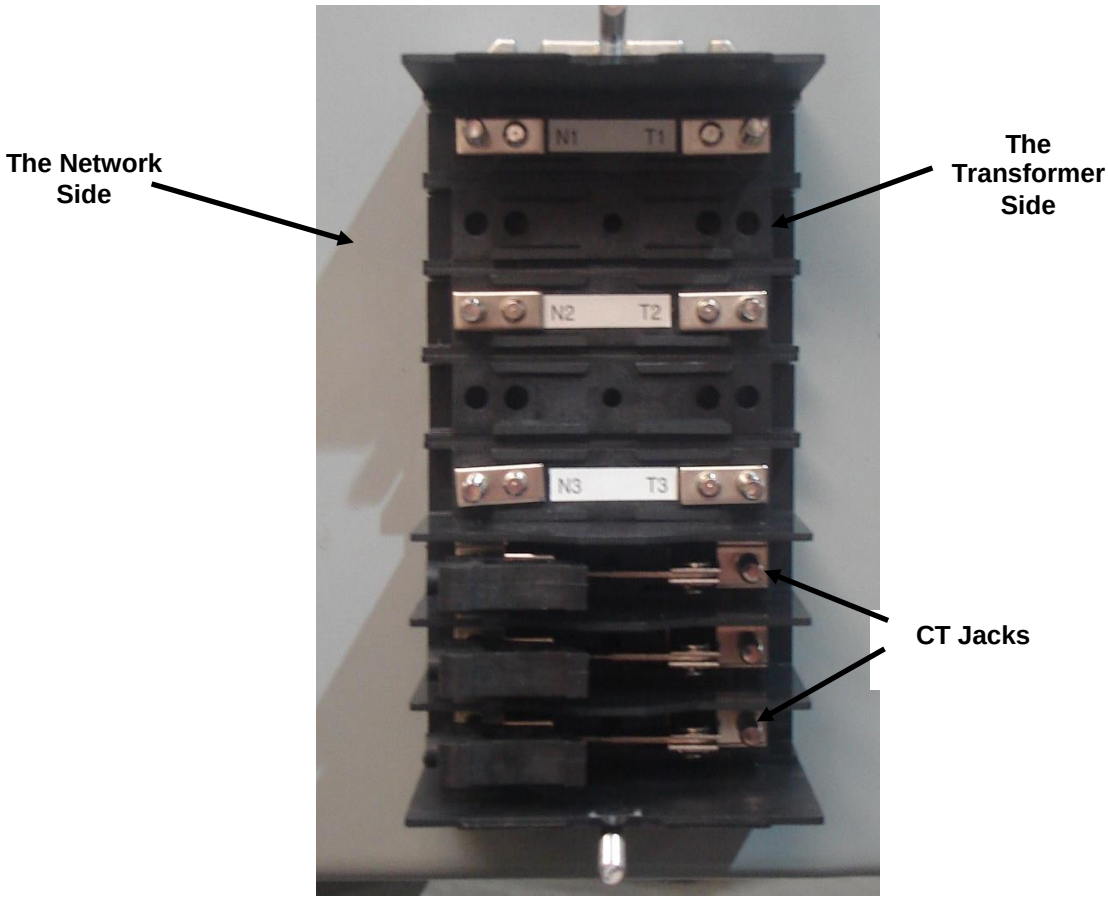

Figure 14 – The Test Switch Phasing Block

2. Ensure that ZERO volts are present.

REMINDER

Proper PPE must be worn while attaching leads to an energized bus.

3. Attach Test Set grounds and jumper between the shutter and the cassette frame. See Figure 15.



Figure 15 – Attaching the Test Set Grounds

4. Connect test kit leads N1, N2, N3 and T1, T2, T3 on the studs of the test block.
5. Remove the dead front upper compartment cover. See Figure 16.

NOTE

The fuse links shown in Figure 15 may differ from those used at your location.

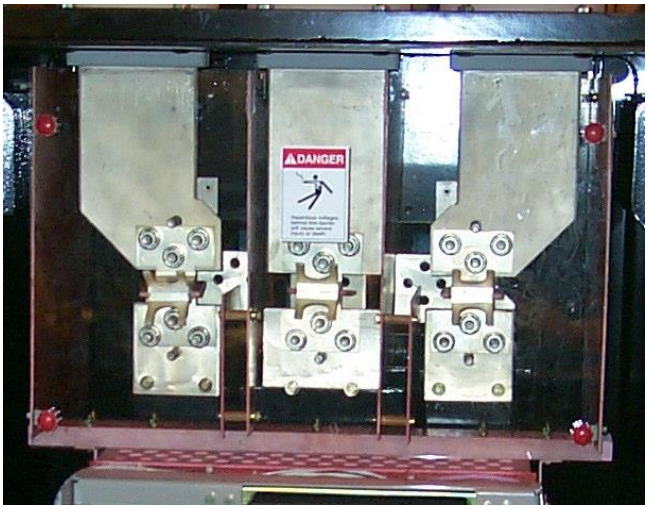

Figure 16 – The Dead Front Upper Compartment

6. Connect the power leads of the Test Set to the energized network bus.
7. Place the outside handle in the AUTO position.
8. Pull the Electrical Interlock shaft toward you until the spring detent ball is in front of the Interlock mounting bracket. See Figure 17.

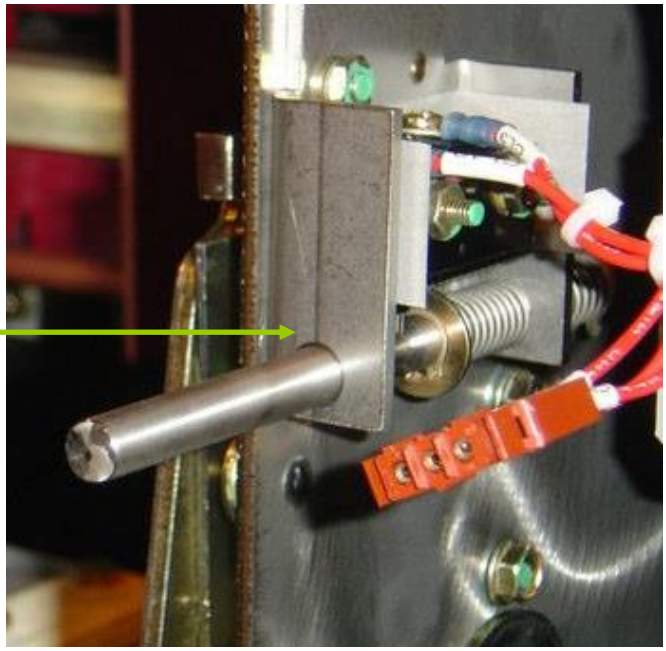

Figure 17 – The Electrical Interlock

9. Test in accordance with the Microprocessor relay tests.

Test 2 – Relay Tests

1. Replace the breaker cover.
   a) Push slightly down on the charging handle and insert the handle through the cover slot.
   b) Tighten the bolts using a cross pattern. Being careful not to overtighten bolts or the cover may crack.
2. Relay Testing will be performed with the breaker out on the rails and **not** with the breaker in the relay test position.
3. Connect the jumper cables between the breaker and the lower relay drawer wiring.
4. Document the results from the testing and the MPCV-D serial number as well as the nameplate information of the network protector on the maintenance form and the Cascade database.

Test 3 – Relay Tests (continued)

Microprocessor Relays

1. Perform an Overvoltage test and adjust the relay in accordance with the following documents. Record the As-Found and As-Left values.
   - Network Protector Test Set Instructions
   - Relay Instructions
   - Network Protector Instructions
2. Perform a Reverse Current Trip test in accordance with the following documents. Record the As-Found and As-Left values.
   - Network Protector Test Set Instructions
   - Relay Instructions
   - Network Protector Instructions
3. If a Time Delay is used, perform a Time Delay test in accordance with the following documents. Record the As-Found and As-Left values.
   - Network Protector Test Set Instructions
   - Relay Instructions
   - Network Protector Instructions

Test 4 – Ground Fault Test (480V units only)

CAUTION

The ground fault protection circuit between the protector and the customer main service is owned and maintained by the customer. Testing the lock out may call for all protectors to trip. An up-to-date drawing must be made available and reviewed to determine those steps which must be taken to prevent tripping of all protectors.

Verify trip from lockout and block the close of the protectors on all units having a ground fault scheme.

NOTE

The Ground Fault system is typically Customer-owned, and the Lockout is typically Eversource-owned. It is important to have an up-to-date print of the scheme prior to performing a test. This test is only to be performed on those units equipped with a ground fault system.

CM-52 Re-install Procedure

1. Inspect the network protector enclosure for chipped, cracked or missing paint, corrosion, etc. Remove any loose paint and/or rust with a wire brush and repaint those areas to prevent further corrosion.
2. Check the condition of the external tank. Check cooling fins to ensure that they are not clogged, missing, or in need of replacement.
3. Check the door gasket to ensure it is still in good condition.
4. Apply gasket preservative to the door gasket.
5. Apply anti-seize grease to the door bolt hardware.
6. Verify that the External Handle is in the OPEN position.
7. Lift the Lever-in drive shutter door and insert the 3/8” square end of the wrench into the Lever-in drive socket or use the remote racking technique if so equipped.
8. Turn the socket clockwise until the RED indicator appears.
9. Remove the crank and secure it.
10. Close the door.
11. Tighten the hinge bolts.
12. Tighten all door bolts (The tank is secure once the 2 jam (stop) nuts touch the tank.)

> **NOTE**
>
> The use of impact tools is not recommended and could lead to moving stop nuts for proper sealing and premature door gasket damage.)

13. Verify the protector enclosure is holding pressure using a pressure gauge/fill device. If it is not, perform a **leak check** on those network protectors with submersible enclosures as follows:
    a) Pressurize the enclosure with 5 PSI of dry nitrogen.
    b) Apply a soap solution to the door gaskets, enclosure penetrations, throat gaskets, operating handle gaskets, welds, etc.
    c) Let this sit for 30 minutes.
    d) Check for leaks by looking for soap bubbles. Fix any leaks if possible.
    e) Record any leaks on the inspection form and alert supervision.
    f) Reduce the pressure within the enclosure to (**see Addendum A**) psi.
14. Place the operating handle in the as-found position.
15. Record the as-left counter reading.

Summary of Changes

Revision 1
Effective Date: **March 6, 2013**
Related Feedback - SME Cory Morgan, Working Group, MS-0183, MS-0156

Revision 1	Description of Changes
1.	Revised ""Before You Begin" section to incorporate more detailed safety information previously contained in Network Operating Policy.
2.	Removed all references to TD 871, which has been superseded.
3.	Moved all cautions to before the steps to which they apply.
4.	Added list of insulated tools that may be useful for Network Protector maintenance.
5.	Replaced those photos that showed technician working with bare hands.
6.	Added step to "record the as-left counter reading" to the Re-install procedure.
7.	Step added to measure and record secondary voltages when opening the protector.
8.	Replaced reference to Accident Prevention Manual with reference to NU Systems Employee Safety & Health Handbook.
9.	Appended Vendor Technical Manual to end of instructions.
10.	Removed Caution regarding oil leaking from the enclosure, as protectors do not contain oil.
11.	Deleted requirements to perform Megger and Ductor testing.

Revision 2
Effective Date: **August 6, 2014**
Related Feedback - SME Enes Basic, UG Working Group, MS-0290, MS-0309

Rev. 2	Description of Changes
1.	Revised ""Before You Begin" section for clarity and to incorporate more detailed safety information previously contained in Network Operating Policy.
2.	Included and changed PPE requirements to meet developed CM52 Job Hazard Analysis (JHA-2013-03).
3.	Available Network Protector Tools List was modified to include only necessary tools, appropriate transformer and protector mating gaskets, and the newly added vertical and horizontal barrier boards for Network Protector Service.
4.	Revised "Racking Out and Isolating the Protector" section to include horizontal and vertical barrier board installation.

Revision 3 – Effective: **July 1, 2015**
Related Feedback – N/A

1.	Changed names of the Owner, SME, and Approvers on the Signature page, as required.
2.	Incorporated the following global replacements: • NU Maintenance Manual replaced by Eversource Maintenance Program. • CL&P replaced by Eversource Connecticut. • WMECO replaced by Eversource Western Massachusetts. • PSNH replaced by Eversource New Hampshire. • NSTAR replaced by Eversource Eastern Massachusetts. • NUMM replaced by EMP.
3.	Incorporated the following global replacements: • NU Safety Manual replaced by Eversource Employee Safety Manual.

Revision 4 – Effective Date: **July 1, 2017**
Related Feedback – N/A

1.	All stock codes changed to the new Maximo number.
2.	Approvers updated

Instructions for Cutler-Hammer

Type CM52

Network Protectors

800 to 4500 Amperes

Read and understand these instructions before attempting any assembly, operation, or maintenance of the Network Protector.

See important disclaimer of warranties and limitation of liability on the following page.

See important safety information on pages iii and iv.

DISCLAIMER OF WARRANTIES AND LIMITATION OF LIABILITY

THERE ARE NO UNDERSTANDINGS, AGREEMENTS, REPRESENTATIONS OR WARRANTIES, EXPRESSED OR IMPLIED, INCLUDING WARRANTIES OF MERCHANTABILITY OR FITNESS FOR A PARTICULAR PURPOSE, OTHER THAN THOSE SPECIFICALLY SET OUT BY AN EXISTING CONTRACT BETWEEN THE PARTIES. ANY SUCH CONTRACT STATES THE ENTIRE OBLIGATION OF SELLER. THE CONTENTS OF THIS DOCUMENT SHALL NOT BECOME PART OF OR MODIFY ANY PRIOR OR EXISTING AGREEMENT, COMMITMENT OR RELATIONSHIP.

The information, recommendations, descriptions and safety notifications in this document are based on Cutler-Hammer's experience and judgment with respect to CM52 NETWORK PROTECTORS. THIS INFORMATION SHOULD NOT BE CONSIDERED TO BE ALL INCLUSIVE OR COVERING ALL CONTINGENCIES. If further information is required, Cutler-Hammer should be consulted.

NO WARRANTIES, EXPRESSED OR IMPLIED, INCLUDING WARRANTIES OF FITNESS FOR A PARTICULAR PURPOSE OR MERCHANTABILITY, OR WARRANTIES ARISING FROM COURSE OF DEALING OR USAGE OF TRADE, ARE MADE REGARDING THE INFORMATION, RECOMMENDATIONS, DESCRIPTIONS AND SAFETY NOTATIONS CONTAINED HEREIN. In no event will Cutler-Hammer be responsible to the user in contract, in tort (including negligence), strict liability or otherwise for any special, indirect, incidental or consequential damage or loss whatsoever including but not limited to damage to or loss of use of equipment, plant or power system, cost of capital, loss of profits or revenues, cost of replacement power, additional expenses in the use of existing power facilities, or claims against the user by its customers resulting from the use of the information, recommendations, descriptions and safety notations contained herein.

All possible contingencies, which may arise during installation, operation, or maintenance, all details and variations of this equipment, do not purport to be covered by these instructions. If the purchaser regarding his particular installation, operation or maintenance of his equipment desires further information, the local Cutler-Hammer representative should be contacted.

SAFETY PAGES

Keep this instruction book available to those responsible for the installation, maintenance, and operation of the network protector.

The installation, operation and maintenance of a network protector presents numerous potential unsafe conditions, including, but not limited to, the following:

- Improper operation
- Lethal voltages
- Moving machinery
- Heavy components

Specialized procedures and instructions are required and must be adhered to when working on such apparatus. Failure to follow instructions could result in severe personal injury, death and/or property damage.

Additionally, personnel when installing, operating, and/or maintaining such equipment must use all applicable safety procedures such as OSHA requirements, regional and local safety requirements, safe working practices, and good judgment.

Safety, as defined in this instruction book, involves two conditions:

16. Personal injury or death
17. Product of property damage (includes damage to protector, other property, and reduced protector life).

Safety notations are intended to alert personnel of possible personal injury, death or property damage. They have been inserted in the instructional text prior to the step in which the condition is cited.

The safety notations are headed by one of three hazard intensity levels which are defined as follows:

1. **DANGER** Immediate hazard, which will result in severe personal injury, death or property damage.
2. **WARNING** Hazardous or unsafe practice, which could result in severe personal injury, death, or property damage.
3. **CAUTION** Hazardous or unsafe practice, which could result in minor personal injury or property damage.

Some major safety concerns involving the network protectors are listed on the next page.

Refer to appropriate areas of the instruction book for further instructions.

18. CM52 Network protectors are designed to operate within the current and voltage limitations given on their nameplates. **DO NOT** applies these units to systems with currents and/or voltages exceeding these limits. See Tables 1 and 2.
19. To perform work on this type of equipment requires personnel with training and experience in high voltage circuits. Only qualified* electrical workers familiar with the construction and operation of such equipment and hazards involved, should be permitted to work on Type CM52 Network Protectors.
20. There are several interlocks on the protectors. They are for personnel and/or equipment protection. **UNDER NO CIRCUMSTANCES SHOULD THEY BE MADE INOPERATIVE. TO DO SO COULD CAUSE BODILY INJURY AND/OR PROPERTY DAMAGE.**
21. Draw out protector's removable element before making any adjustments or doing maintenance of any nature.
22. **NEVER** energize the protector without the arc chutes and barriers in place.
23. **ALWAYS** be sure the protector hardware is in place and bolted tightly before placing protector into its housing operation.
24. Network Protectors are used where a large amount of power is distributed to high load density areas. As a result, any short circuit at any point in the system involves very high fault currents; thus, extreme care should be exercised when installing or working on an energized protector.
25. Extensive use has been made of barriers and interlocks in the CM52 Network Protectors to provide greater safety to maintenance personnel. Keep barriers in place and immediately replace any that have been broken. Because barriers and interlocks are provided, insulated tools and gloves are not required to remove the drawout from the enclosure. However, the use of insulated tools and safety gloves must be utilized when removing fuses or at the initial installation of the protector on the system.
26. Before performing maintenance or removing a protector from service, **ALWAYS** de-energize the protector.
27. All Safety Codes, Safety Standards and/or Regulations as they may be applied to this equipment must be adhered to. *Quality Persons and defined in the National Electrical Code.

CAUTION

The network protectors described in this book were designed and tested to operate within their nameplate ratings.
Operation outside of these ratings may cause the equipment to fail, resulting in bodily injury and property damage.

TABLE OF CONTENTS

DESCRIPTION — **Vendor Manual Page Number**

Disclaimer of Warranties and Limitation of Liability ii
Safety Pages ..... iii - iv
Network Protector Rating Tables viii
Introduction x

Section I - Receiving, Handling and Storing
1.1. Receiving 1
1.2. Handling 1
1.2.1. Lifting of Breaker 1
1.2.2. Lifting of Enclosure 2
1.3. Storing 2

Section II - General Description
2.0 General 3
2.1 CM52 Network Protector 5
2.1.1 Frame 5
2.1.2 Circuit Breaker Unit 5
2.1.2.1 Arc Chutes 5
2.1.2.2 Current Transformers 6
2.1.2.3 Operating Mechanism 6
2.1.2.4 Control Module 6

Section III - Operation
3.1 Procedure to Remove the Drawout Unit 8
3.1.1 To Open the Door 8
3.1.2 Levering the Breaker 8
3.2 Enclosure 10
3.2.1 Outside Operating Handle 10
3.2.2 Mechanical Anti-Close Interlock 12
3.2.3 Installing Network Protectors to Network Transformer 12

Section IV - Circuit Breaker Description and Operation
4.1 Introduction 13
4.2 Basic Circuit Breaker Assembly 13
4.3 Pole Unit 14
4.3.1 Primary Moving Contacts 14
4.3.2 Primary Stationary Contacts 15
4.4 Electrical Operation 15
4.4.1 Procedure to Remove the Motor 16
4.4.2 Anti-Close Feature 16
4.4.3 Trip and Lockout 16
4.5 Arc Chambers 17
4.5.1 Arc Chutes 17
4.6 Electronic Tripping System 18
4.7 Internal Electrical Accessories 20

Electrical Testing 22

Manual Closing of the CM52 Breaker 23

Section V – Renewal Parts
5.1 Renewal Parts list 24
Diagrams 25-30
Addendum-Electrical Safety Interlock 31

LIST OF TABLES

Table	Description	Page
1	CM52 Ratings Table – Ratings tested at 600V	vii
2	Weights of Draw out Units	vii

LIST OF ILLUSTRATIONS

Figure	Title	Page
1	CM52 800A - 2000A Network Protector	ix
1a	3500A - 4500A Network Protector	ix
2	Lifting the CM52 Breaker	1
2a	Lifting the CM52 Enclosure	2
3	NPL Fuse Housing (External fuses)	3
3a	NPL Fuse Housing (Internal fuses)	4
4	CM52 w/Breaker Element withdrawn on rails	5
5	Arc Chute	6
6	Relay Module Panel Opened	7
7	Inserting Levering –In Crank	8
8a	Breaker in Connect position	9
8b	Breaker in Test position	9
8c	Breaker in Disconnect Position	9
9a	Handle in “OPEN”	11
9b	Handle in “AUTO”	11
9c	Handle in “CLOSE”	11
10	CM52 with Breaker withdrawn	13
11a	Main contacts open	14
11b	Main contacts closed	15
12	Motor Operator Installation	16
13a	Loosen Arc Chute captive bolt	17
13b	Remove Arc Chute	18
14	Removing Spring Release	19
15	Indicating Diagnostic Module (IDM)	20
16a	Location of Auxiliary Switch “D”	21
16b	Removal of Auxiliary Switch	21
17	Test Plug Connector	22
18	Test Plug with Connections	23

Table 1- CM52 Ratings Table – Ratings tested at 600V

Continuous Current Rating (Amps)	Breaker Element Width	CM52 Interrupting Rating (kA)	CM52 Close and Latch Rating (kA)	IEEE/ANSI Interrupting Rating (kA)	IEEE/ANSI Close and Latch Rating (kA)
800	17”	42	35	30	25
1200	17”	42	35	30	25
1600/1875	17”	42	35	30	25
2000	17”	42	35	35	35
2250	22”	65	45	60	40
2500/2825	22”	65	45	60	40
3000	22”	65	45	60	40
3500	35”	85	65	60	40
4500	35”	85	65	60	40

Table 2 - Weights of Draw out Units

Amperage Rating	CM52 Breaker Element Weight (lbs)	Comparable Breaker Weight (lbs)
800-2000A	170	400
2250-3000A	185	550-650
3500-4500A	350	700-1300

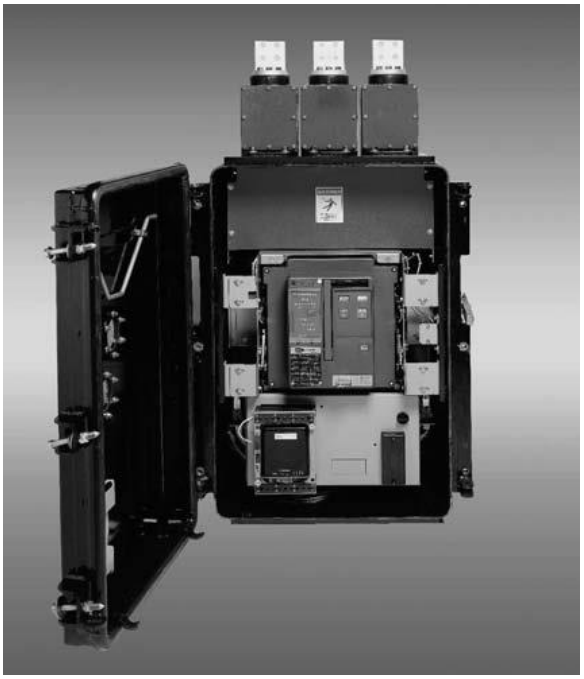

Fig. 1 - CM52 800A - 2000A Network Protector

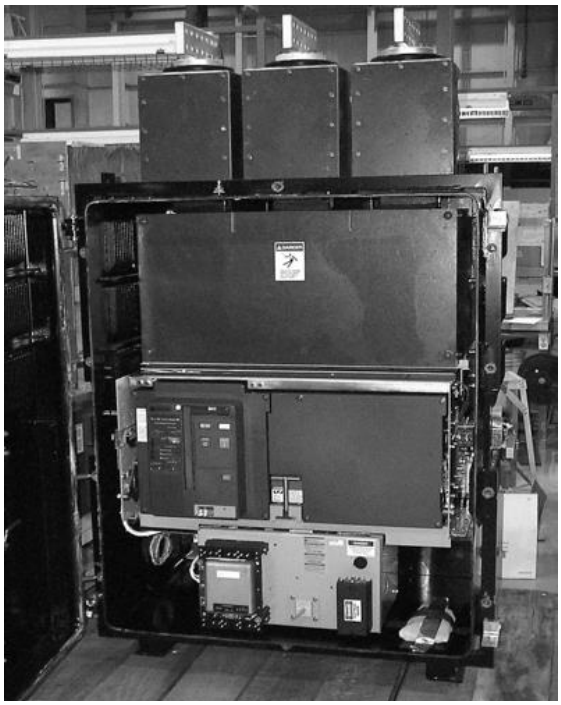

Fig. 1A - 3500A - 4500A Network Protector

(NOTE: 2250A – 3000A Not Shown)

INTRODUCTION

PURPOSE

This instruction book is expressly intended to describe the installation, operation and maintenance of the Type CM52 network protectors. Should any item not be sufficiently covered by these instructions and additional information is required, contact your local Cutler-Hammer office.

Information regarding operation, maintenance, and testing of network relays is contained in Instruction Book 35-581B.

For application information, consult your nearest Cutler-Hammer sales office, or see appropriate ANSI standards.

CAUTION

IT IS NOT SAFE TO OPERATE THE CM52 NETWORK PROTECTORS UNLESS THEY ARE INSTALLED IN A SUITABLE METAL ENCLOSURE OF ADEQUATE STRENGTH TO WITHSTAND THE EFFECTS OF HIGH CURRENT SHORT CIRCUIT FORCES; OR BODILY INJURY AND/OR PROPERTY DAMAGE COULD RESULT.

The need to provide electrical power at the utilization voltage – without increasing equipment size – has resulted in a shift from 125/216 – volt to 277/480 – volt systems. With this trend toward the higher voltage, a change in operation and maintenance procedures is required, because of the difference in arcing characteristics at 480-volts as compared to those 125/216 volts. For example, while an arc in a 216-volt system is normally self-extinguishing, an arc in a 480-volt system will usually burn until an extinguishing device interrupts it or until it totally consumes the arcing material.

Cutler-Hammer CM52 Network Protectors are designed to assure service continuity in 125/216 and 277/480 volt Y connected secondary network systems. These systems, in either distributed grid or spot network form, are commonly used in such areas of high load density as metropolitan and suburban business districts.

When a fault on a primary system (cable or network transformer) occurs, the CM52 Network Protectors will open to isolate the fault from the network system. Loss of the feeder will not result in service outage to any load on the secondary network. The other primary feeders will carry the load until the faulted feeder can be brought back to service.

CM52 Network Protectors consist basically of an air circuit breaker, a breaker operation mechanism, network relays and control equipment. Units are available in both weatherproof and submersible enclosure, for either separate or transformer throat mounting.

CM52 Network Protectors have a drawout design with positive safety interlocks that provide protection for personnel against contact with energized components while disconnecting the unit for test or maintenance. All the main current carrying and mechanical operating components are located behind a “dead-front” cover that prevents tools or hands from being inserted into an energized protector. The draw out unit is operated by a hand-cranked levering system, which cannot be engaged unless the circuit breaker is open; and it cannot be disengaged unless the draw out unit is either fully disconnected or fully connected.

Modular construction facilitates field maintenance and/or replacement of parts of the draw out unit.

A spring close operating mechanism in the network protectors prevents partial closures. The CM52 spring-close mechanism will not permit a closing motion of the contacts to start until the closing springs are fully charged.

Externally mounted, silver-sand fuses are provided to interrupt fault current by disconnecting the protector from the network bus in case the network protector would fail to trip. As an additional option internal copper link, or lead-alloy fuses can be fitted into a CM52 enclosure .

A low-energy, direct-trip actuator provides a mechanical force to trip the circuit breaker.

SECTION I - RECEIVING, HANDLING, AND STORING

1.1 RECEIVING

Each unit shipped comprises a housing containing a draw out unit which may have externally mounted fuse housing, which are equipped with Type NPL fuses, and are supplied with spade terminals or threaded studs.

The type MPC series solid-state network protector relay is supplied with the CM52 network protector mounted on the relay panel. For use of the MPC series relay, please refer to relay I.B.

When receiving new network protectors, make a general inspection looking particularly for damage, which may have occurred in handling and shipping. If any damage is apparent, file a claim within 24 hours. If the unit is to be placed in storage for more than a few weeks it should be inspected and tested thoroughly and any deficiencies reported.

1.2 HANDLING

1.2.1 Lifting of Breaker

To facilitate lifting, two lifting brackets are supplied and mounted inside the door of each enclosure. These brackets can only be attached once the breaker has been completely withdrawn on its extension rails.

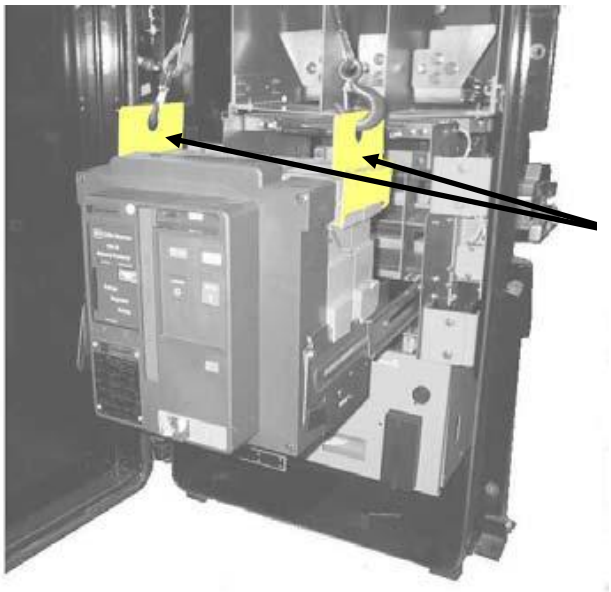

Figure 2 – Lifting the CM52 Breaker

1.2.2 Lifting the Enclosure

A SPREADER MUST BE USED TO ENSURE THAT NO DAMAGE OCCURS. (See figure 2A.)

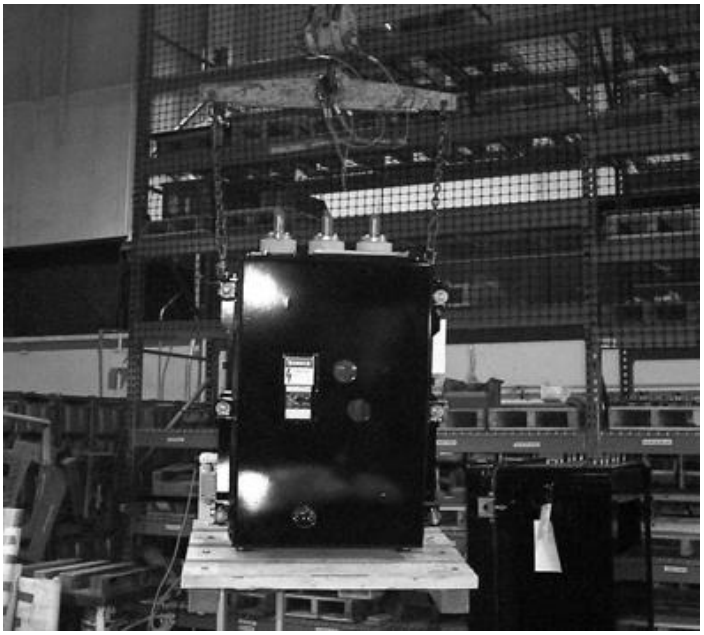

Figure 2A – Lifting the CM52 Enclosure

Two lifting holes, 1-3/8 inch diameter, are located near the top at each side of the enclosure. Spreaders must be used on chains or slings to prevent damage to the fuse housings. For shipping, network protectors are mounted on wooden skids designed for use with forklift trucks. Insert fork at the rear of unit and tilt unit slightly toward truck before lifting.

1.3 STORING

Submersible units may be stored as received with door tightly closed and with the shipping cover over the throat opening.

NOTE: Units should be transported and stored in upright position only.

SECTION II - GENERAL DESCRIPTION

2.0 GENERAL

Type CM52 network protector is a special air circuit breaker equipped with a relay that operates in response to voltage across the protector or current through the protector. This relay causes the protector to close or to open as required by the conditions between the network and the feeder transformers. Control power is taken directly from the system and therefore no separate power source is required.

CM52 units are available as standard, for 216Y/125 volts, 480Y/277 volts at 60 Hertz, with other voltages as well as 50 Hertz units available upon request.

CAUTION

Type CM52 Network Protectors are protective devices. As such, they are maximum current rated devices. Therefore, they should not under any circumstances be applied outside of their ratings , which could cause the equipment to fail, resulting in severe personal injury, death, or property damage.



Fig. 3 - NPL Fuse Housing (External Fuses)

The standard submersible enclosure is equipped with type NPL fuses in externally mounted fuse housing located on top of the network body. The CM52 is also available with internal fuses.

The normal power flow is in at the throat from the transformer, down to the transformer side disconnect device on the levering-out unit, up through the unit to the network side disconnect device, out the top of the enclosure into the fuse housings, through the fuse to the supplied mounting terminal.



Fig. 3A - (Internal Fuses)

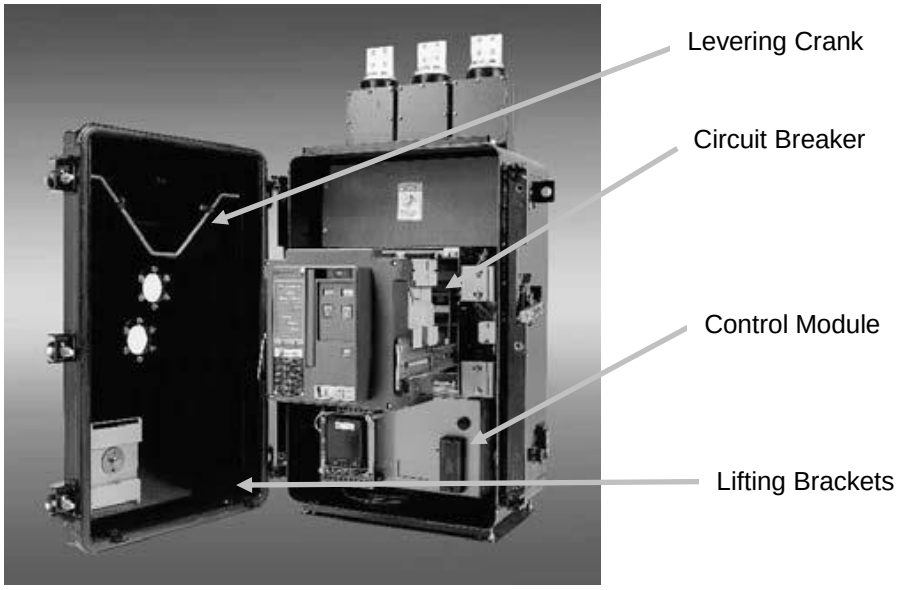

Fig. 4 - CM52 w/Breaker Element Withdrawn On rails

Opening the Enclosure

The CM52 enclosure incorporates a hinge design, which is separate from the door bolt hardware. - make sure that each bolt has been fully extended before attempting to swing the door open. Having completed that, the door can be swung into its full position.

NOTE: With the door closed and the door hardware lagged down, the hinge and door lifting attachments can be switched for opposite door opening, without breaking the door seal. The outside operating handle and associated switch, mounted inside the enclosure, can be switched to the opposite side once the door has been opened.

2.1 CM52 NETWORK PROTECTORS

The complete network unit consists of the air circuit breaker and its associated relaying equipment consisting of four major elements.

2.1.1 Cassette Frame

The supporting structure of the breaker and relay module is mounted directly in the enclosure.

2.1.2 Circuit Breaker

Each contains arc chutes, contact system, current transformers, primary and secondary disconnect

2.1.2.1 Arc chutes

Arc Chutes are designed and constructed to entrap the splitter plates. A single captive hold-down screw is located in the rear of each arc chute to facilitate its removal.

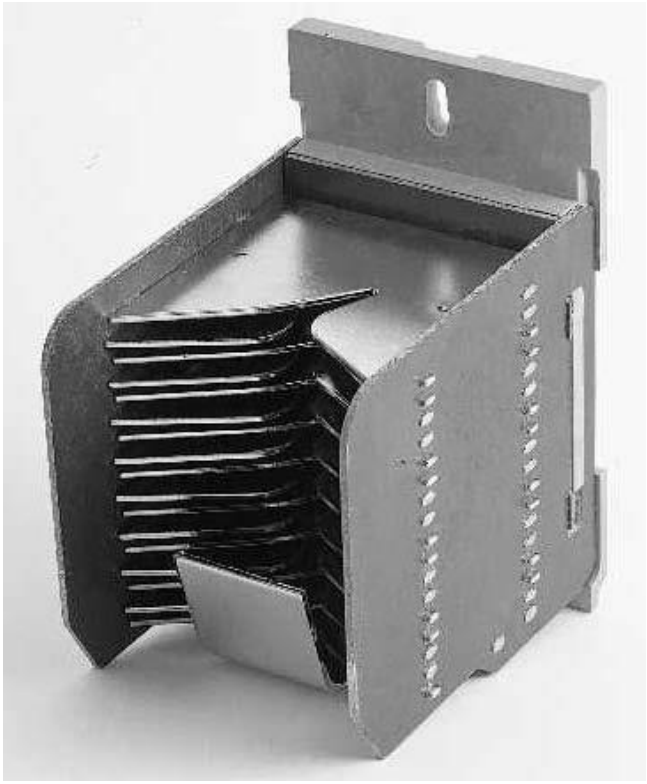

Fig. 5 - Arc Chute

2.1.2.2 Current Transformers

Current transformers located on the rear of the circuit breaker and are molded frame construction with exposed fast-on terminals.

2.1.2.3 Operating Mechanism

The operating mechanism, located on the front of the circuit breaker, consists of an independent spring-closing mechanism; spring charging motor, and trip device.

2.1.2.4 Control Module

The control module consists of switches; relays, transformer and secondary disconnect points. It is electrically connected to the operating mechanism by plugs and sockets.

Relay Module Layout

The relay module of the CM52 has a swing open front panel that permits the replacement of the CPT, PT's (480V) and all of the relay module control wiring. The hinged front panel has the mounting of the MPC series relay and the Test switch.

Once the front panel has been swung open, the Auxiliary Switch and Secondary Connection Block is mounted in the lower center portion of the relay module, see figure 6. This device is a DIN rail mounted terminal block. All of the factory wiring has been made on the rear ports of the block , while all customer connections can be made on the front portion of the blocks. There is a wire designation strip that identifies the wire number to its port. This terminal block only requires that the wire be stripped approximately ¼", inserted into the wire clamp area and the top recessed screw tightened to ensure a secure joint.



Fig. 6 - Relay Module Panel Opened

NOTE: All of the secondary contact wiring has been factory made from the breaker secondary disconnecting to the DIN rail terminal block. Two 1.00" NPT half-pipe couplings are welded to the enclosure body, one on each side, adjacent to the relay module area. There is a large opening on the left and right hand side sheets of the relay module to facilitate wire routings from the pipe plug to the secondary terminal block.

SECTION III – OPERATION

PROCEDURE TO REMOVE THE DRAWOUT UNIT FROM HOUSING

When the enclosure is not attached to a transformer, the enclosure must be supported in a way that will prevent tipping forward when the door is open and the draw out unit is on the extension rails.

3.1.1 To Open Door

Loosening all the bolts, starting with the bolts on the hinged side, opens the quick opening enclosure. The bolts are loosened until the bolts are completely disengaged from the housing support.

3.1.2 Levering Circuit Breaker

The circuit breaker is now ready to be levered. With the circuit breaker OPEN, the levering device access door can be raised. The levering device is hand operated under a standard 3/8" square drive speed wrench, which is provided. As long as the access door is raised, the circuit breaker is held trip free. Begin by rotating the levering-in screw to the full counterclockwise (DISCONNECT) position.



Fig. 7- Inserting Levering –In Crank

Note: Levering-in door must be completely closed after crank removal to insure proper operation.

The position of the circuit breaker within its compartment is dictated by color-coded position indicators (Red = Connect, Yellow = Test, Green = Disconnect). To remove the circuit breaker from its compartment, follow the procedure just described using a counterclockwise motion.

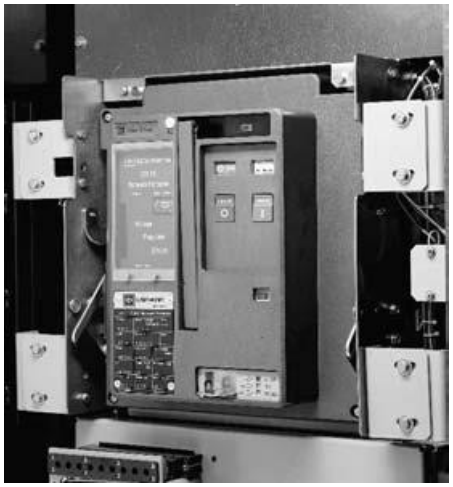

Fig. 8a - Breaker in Connect position



Fig. 8b - Breaker in Test position



Fig. 8c - Breaker in Disconnect Position

NOTICE

The circuit breaker mechanism is interlocked such that charged closed springs are automatically discharged if the circuit breaker is levered into or out of the CONNECT position.

3.2 ENCLOSURE

The CM52 submersible enclosure is of welded steel construction, which has been bonderized and protected by several coats of high-grade paint, thereby minimizing corrosion in service. This enclosure incorporates several innovative features, such as:

1. Side mounted external operation handle
2. Internal window hardware
3. Housing Gasket
4. Externally mounted fuse housing or internal fuse design.

A door is arranged so that it may be hinged on either side while the clamping bolts are still supporting the door. The window is made of tempered glass clamped by gaskets with a cushioning action to keep the housing watertight. The operating handle is made watertight through the enclosure by use of an O-ring held captive with a retaining plate.

3.2.1 Outside Operating Handle

WARNING

DO NOT MANUALLY CLOSE A PROTECTOR TO CONNECT AN ENERGIZED TRANSFORMER TO AN ENERGIZED NETWORK SYSTEM.

The operating handle has three positions: OPEN, AUTO and CLOSE as indicated on the nameplate located directly beside the handle.

The handle is held captive in the OPEN and AUTO position by means of the detent cam, but is spring returned from the CLOSE position. External padlock provisions are available in the AUTO and OPEN modes. It is recommended that the operator should not normally attempt to place the Network Protector into service by utilizing the external handle CLOSE mode. The protector should be placed in the AUTO position to permit the MPC series relay to control the breaker actions. An exception to this recommendation would be in the initial closing of a Network Protector into a known bus which lacks connected load to correctly operate the MPC series relay. For this type of operation, with the housing door of the protector securely closed, move and hold the external handle to the CLOSE position. After the protector closes move the handle to the AUTO position. Do not drop handle from the close position, this action could result in the Network Protector opening and a repeat close operation would be necessary.



Fig. 9a - Handle in "OPEN"



Fig. 9b - Handle in "AUTO"



Fig. 9c - Handle in "CLOSE"

(Handle is shown with optional 90 degree handle extension.)

3.2.2. Mechanical Anti-Close Interlock (non-standard)

The Electrical Interlock has superceded this device, see Addendum pg. 19. The Mechanical Anti-Close Interlock is available on request only.

The CM52 is supplied with a mechanical anticlose interlock, which interfaces with a welded pad located on the inside edge of the enclosure door. This pad depresses an exposed rod that will hold the breaker in a mechanical trip free state. It will also prevent electrical closure of the breaker in the instance where a CM52 breaker is being connected (levered-in) to energize bus and the outside operating handle was left in the AUTO position. The Anti-Close interlock permits a close of a breaker in its connected position only if the door has been closed and the outside handle is placed either in the AUTO or CLOSE positions. It is supplied with a defeat mechanism, which permits an operator to open the enclosure door while the breaker remains closed. This entire anti-close assembly is located on the cassette and can be reversed for either left hand or right hand door hinging.

3.2.3 Installing Network Protector to Network Transformer

1. Remove front fuse cover barrier cover.
2. Remove fuse links or internal fuses.
3. Remove Interphase barriers by lifting barrier up and tilting forward. The barriers will lift directly out.
4. Mount Network Protector to transformer flange using gasket provided by the transformer manufacturer and the hardware* provided with the Network Protector.

*Because of the close proximity between phases A & B, and B & C to the throat mounting holes, you may need to use the four special Allen head bolts with an Allen extender provided in the hardware bag.

***On 800A – 2000A design units only**

SECTION IV - CIRCUIT BREAKER DESCRIPTION AND OPERATION

4.1 INTRODUCTION

CM52 circuit breakers are available in both draw out and fixed mounting configurations. A majority of features are common to both configurations and will be discussed in this section.

Controls and indicators for both draw out and fixed circuit breakers are functionally grouped on the front of the circuit breaker.

4.2 BASIC CIRCUIT BREAKER ASSEMBLY



Fig. 10 - CM52 w/ Breaker Withdrawn

The CM52 circuit breakers use a rigid frame housing construction of high temperature engineered thermoset composite resins. This construction provides high strength structural properties, excellent dielectric characteristics and resistance to arc tracking. The 3-piece construction approach provides support while isolating and insulating power conductors.

1. A 2-Piece engineered thermoset composite resin case enclosed current path and arc chambers. The chambers act to channel arc gases up and out of the circuit breaker during interruption.
2. The operating mechanism sits on the front of the case and is electrically isolated from current contact structures. An insulating dead front cover covers the completed breaker.

4.3 POLE UNIT

A current carrying pole unit is individually enclosed and rigidly supported by the case. The individual chambers provide for pole unit isolation and insulation from one another. Each pole unit has one primary contact assembly, which consists of a moving portion.

4.3.1 Primary Moving Contacts

Depending upon the frame size, each primary moving contact assembly is comprised of multiple individual copper contact fingers connected to the load conductor through flexible braided connectors. Two flexible connectors are used to connect each finger to the load conductor. The number of fingers used depends upon the circuit breaker's continuous and shortcircuit current ratings.

The middle four contact fingers perform both the main and arcing contact functions of the moving contacts. A highly conductive alloy pad is part of the contact finger and functions as the moving main contact, and is called the "Heel".

A contact wear indictor is provided for each contact assembly. When making a contact wear inspection, always look straight down into the arc chamber to eliminate parallax. The contact wear indicator is a side-to-side ledge, which is a part of the arc chamber. With the contacts closed and in good condition, the ledge is covered by the back edge of the moving contacts. If the back edge of the moving contacts does not totally cover this ledge, the contacts should be replaced

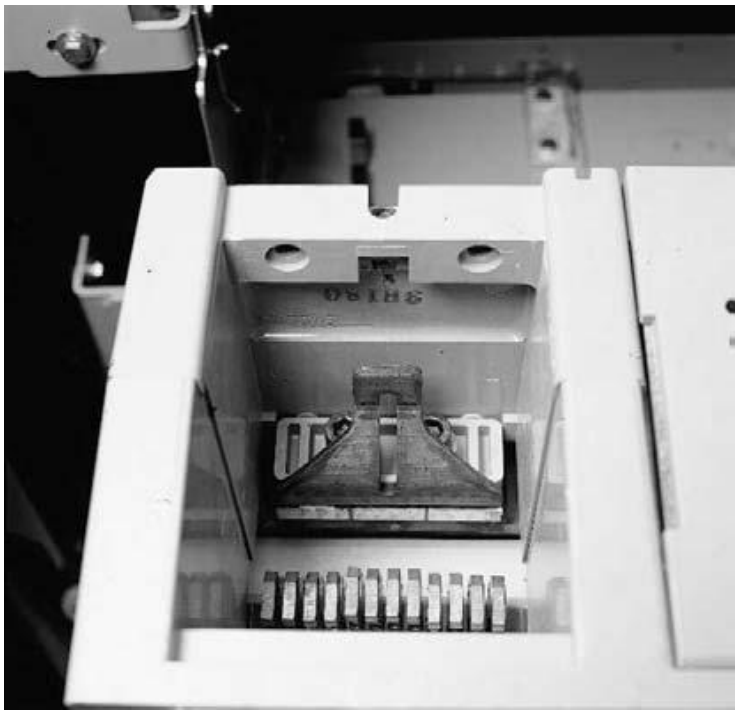

Fig.11a - Main Contacts Open

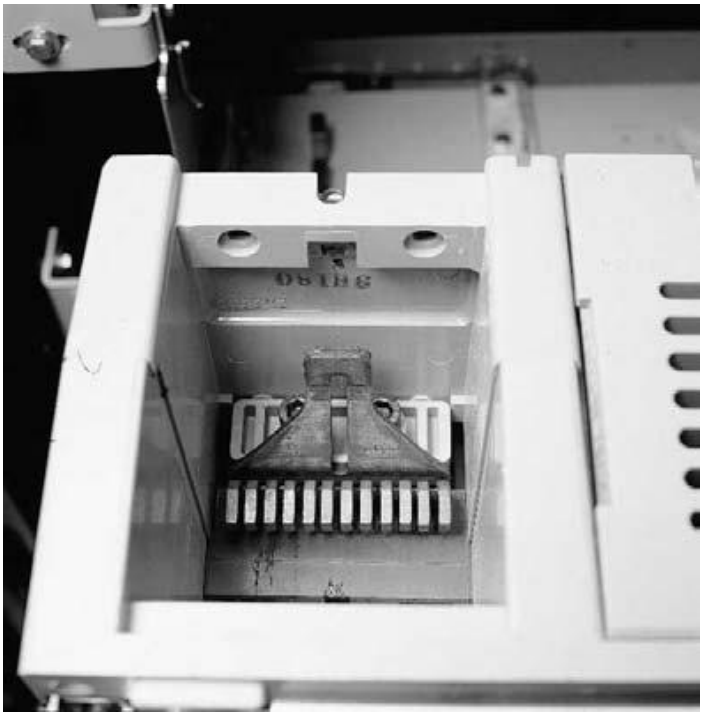

Fig. 11b - Main Contacts Closed

4.3.2 Primary Stationary Contacts

The primary stationary contact is a combination of two items. One is a conductive pad mounted on the line conductor, which functions as the stationary main contact. The other is an arc runner, also connected to a line conductor. The integral arc runner serves a dual purpose.

- Fixed arcing contact

- Part of the Arc chute

4.4 ELECTRICAL OPERATION

For electrically operated circuit breakers, the springs are normally charged through the use of an electrical operator. The springs can, however, be charged manually.

Electrically operated circuit breakers can also be manually closed and opened through the use of the front mounted charging handle and Manual “ON” buttons and Manual “OFF” buttons.

An electrically operated circuit breaker from the factory is also equipped as standard with a spring release to close the circuit breaker electrically. A low energy, trip activator is supplied to open breaker.

4.4.1 Procedure to remove the motor

Remove the breaker front cover. Disconnect the motor wiring connectors. The motor mount main hold-down bolt is located on the front lower portion of the motor mount plate. (Refer to Figure 12). Remove the two right hand bracket self-tapping screws. Loosen , but do not remove, the two screws that hold the right support plate to the motor, the charge pawl needs to be pressed and held behind the gear during removal, slide the entire motor and motor mount plate forward, shift slightly to the left and the motor will become free and can be removed from the breaker.

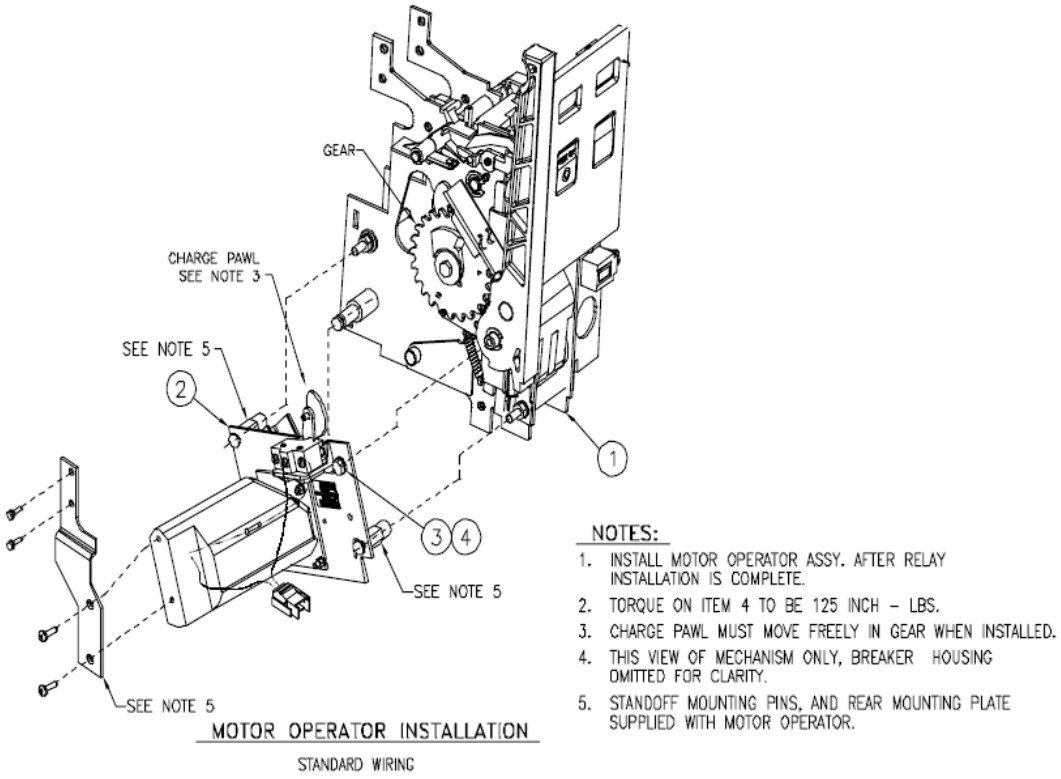

Fig. 12

4.4.2 Anti-Close Feature

The CM52 circuit breaker contains an auxiliary relay that is energized when the MPC series relay calls for a trip. This relay has a contact in series with the motor circuit, isolating the motor closing scheme.

4.4.3 Trip and Lockout

The anti-close relay also provides an automatic lockout feature when an external remote trip is applied. A remote trip can be wired from the din rail terminal block in the relay module. The wires for a remote trip and/or lockout provision are labeled on the wiring diagram provided with the unit.

4.5 ARC CHAMBERS

The CM52 circuit breaker utilizes arc chambers to insulate and isolate individual poles from one another, from the rest of the circuit breaker, and from operating personnel. Arc chambers are molded and integral parts of the circuit breaker frame. Enclosed within each arc chamber is an arc chute that mounts over each set of primary contacts. After the main contacts part, any remaining current is driven to the arcing contacts. The main contacts separate, the moving arcing contacts discharge into the arc chute plates while the integral arc runner also helps to draw the arc into the arc chute.

4.5.1 Arc Chute Removal (see also 2.1.2.1)

The CM52 arc chute mounts down over the arcing contact. Alternating V-shaped arc chute plates attract the arc and interrupt it. The top arc plate, which is a part of the arc chute itself, also helps to attract the arc away from the moving arcing contact and up into the arc chute's Vshaped plates. Arc chute components are assembled in an insulating jacket that is removable from the top of the circuit breaker. Each arc chute has a baffled top cover. One single, captive 5/32" Allen head bolt holds the arc chute in place. Loosen bolt and slide top frame of the arc chute rearward. Pull the arc chute free from the breaker.



Fig. 13a - Loosen Arc Chute Captive Bolt



Fig. 13b - Remove Arc Chute

4.6 ELECTRONIC TRIPPING SYSTEM

The CM52 circuit breaker utilizes a four part tripping system.

- MPC series Relay
- Current Transformer
- Trip Actuator
- Indicating Diagnostic Module (IDM)

MPC Series Relay - Refer to IB 35-581B.

Current Transformers (see also 2.1.2.2) – The current sensors are mounted on the lower rear set of breaker stabs and are protected by a glass polyester shield. The shield has three ports from which can be viewed the sensor ratios. Each CT is wired to the harness through insulated fast-on terminals and the CT molded frame is keyed so it can only be positioned one way into the breaker.

Spring Release – The spring release is a standard device on the CM52 Network Protector Circuit Breaker. It remotely closes the circuit breaker when its coil is energized by voltage input. The closing spring must already be charged for the device to work.

On spring-closed breakers, the spring release is automatically energized during the spring charging cycle. On stored-energy breakers, the spring energy will be stored until the MPCV relay calls for a CLOSE, whereby the spring release coil will be energized permitting the closing springs to close the breaker main contacts.

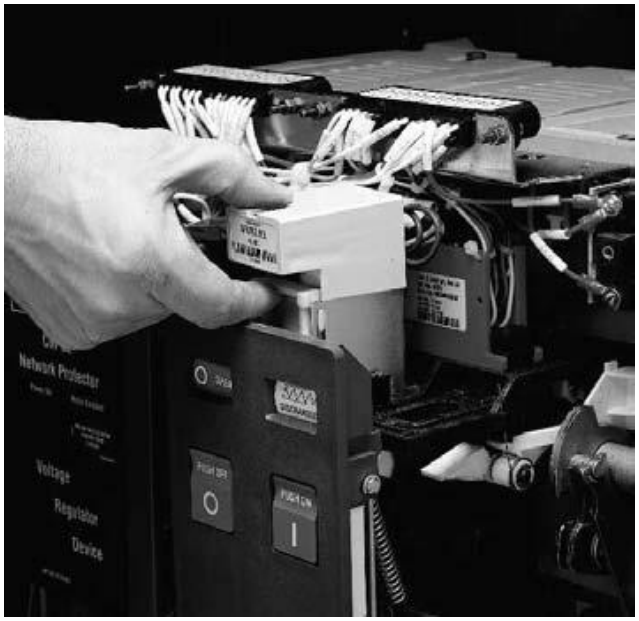

Fig.14 - Removing Spring Release

Pulling upward on locking tap, sliding device forward and removing from the auxiliary deck can remove the spring. Each device is electrically connected through disconnect plugs.

IDM – CM52 Technical Specification

Indicating Diagnostic Module

This device located on the front of the breaker provides voltage regulation and diagnostic information.

The IDM has self-diagnostic circuitry built into the design to aid the user in determining if a component should be replaced. The LED indicators are described below.

- MOTOR ENABLED (Red LED)
  Indicates the supply voltage is normal and the motor circuit is operable.
- POWER ON (Yellow LED)
  Indicates the presence of normal power input to the IDM.
- MOTOR OK (Yellow LED)
  Indicates the motor is healthy.
- SPRING RELEASE OK (Yellow LED)
  Indicates a healthy spring release.
- TRIP ACTUATOR OK (Yellow LED)
  Indicates the IDM trip portion of the circuit is healthy and is ready to implement a trip, if trip conditions should arise.



Fig.15 - Indicating Diagnostic Module (IDM)

4.7 INTERNAL ELECTRICAL ACCESSORIES

Auxiliary Switch – An auxiliary switch is an optional device providing remote electrical indication if the circuit breaker is open or closed.

AUXILIARY SWITCH LAYOUT

Each CM52, as standard, has two Auxiliary Switch blocks. These blocks are located behind and to the left of the Spring Release device, but mounted on the accessory platform. The far left rear position of the Auxiliary Switch (position A) has breaker only contacts. As standard, the customer used Auxiliary Switch is located in the front right hand position (position D).

The Auxiliary Switch wiring colors indicate:

- Black=common
- NO=yellow
- NC=blue

Each standard CM52 contains 3 N.O. auxiliary switches and 3 N.C. Auxiliary Switch spare for the customer's use.

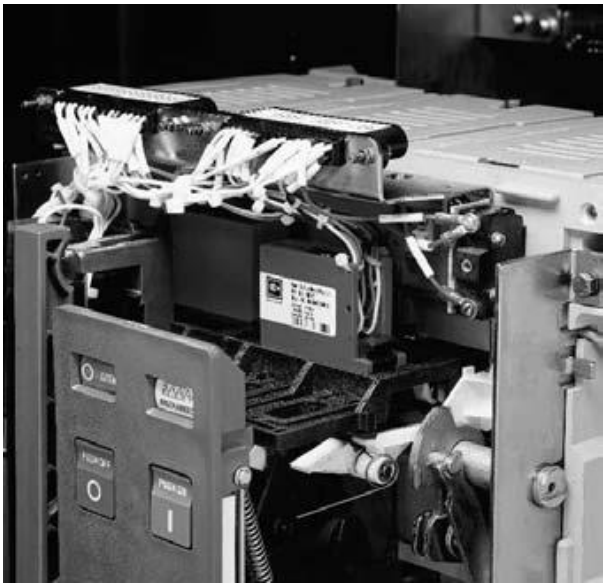

Fig.16a - Location of Auxiliary Switch "D"

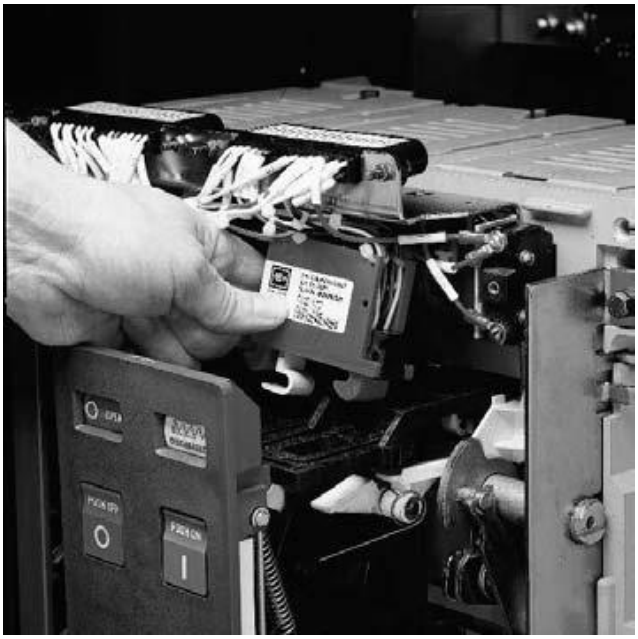

Fig. 16b - Removal of Auxiliary Switch

Customer Secondary Wiring Terminals –

Mounted, as part of the relay module is a DIN rail-mounted terminal block. One side has been factory wired from the Auxiliary Switches, the other side remains open for the customer landing area of secondary wiring.

As standard, 1.0 inch NPT pipe coupling is located on the left-hand side of the enclosure, permitting the entrance/exit of secondary wiring from the enclosure.

Electrical Testing

Three phase testing of the type CM52 can be accomplished in the following manner:

28. Vent the hinge side (if submersible).
29. Open the enclosure door after the breaker has been TRIPPED.
30. Remove the special function speed wrench from the door mount by pressing in tabs mounted to door.
31. Lift the lev-in shutter door and insert the 3/8 square end of the speed wrench into the lev-in drive socket.
32. Turn the speed wrench crank counterclockwise until the “YELLOW” indicator appears on the breaker position indicator. In this position, the main power finger clusters have been disconnected, while the secondary disconnects are still made-up. This is the “TEST” position.
33. Remove the crank and remove the test plug front cover.

WARNING

Test for zero voltage across the top 6 test switches.

34. Also remove the GPO-3 cover located above the breaker by removing the four (4) insulated machine screw.
35. Run the electrical tests per the test set instructions.



Fig. 17 - Test Plug Connector

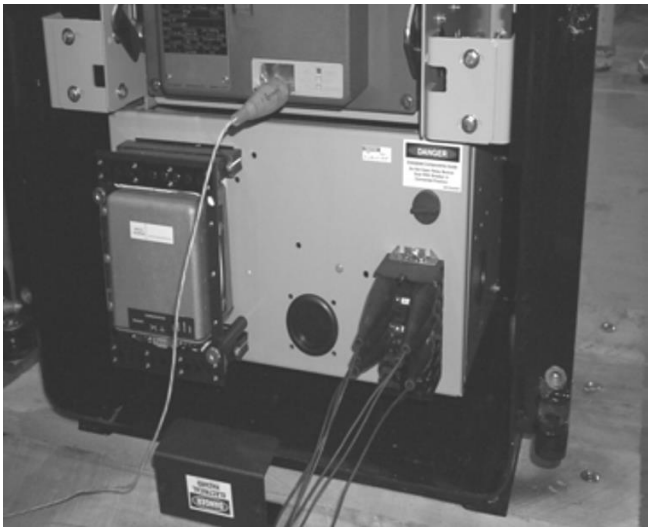

Fig. 18 - Test Plug with Connections

CAUTION

THE NETWORK SIDE BUS WILL BE ENERGIZED.
ATTACH THE TEST KIT SUPPLY LEADS USING SUITABLE INSULATED GLOVES.

*** Alternative Test position with visible break available with extended jumpers.**

MANUAL CLOSING OF THE CM52 BREAKER
With the breaker racked out on its rails, the CM52 breaker can be manually closed (for maintenance purposes only).

WARNING

DO NOT ATTEMPT TO MANUALLY CLOSE A CM52 BREAKER ON TO AN ENERGIZED SYSTEM.

Grasp the manually charging handle and pull downward. Repeat this operation until the Spring Indicator shows that the charging springs have been charges. Push the GREEN "ON" pushbutton. The breaker should close and the breaker semaphore should indicate, "CLOSE"

To manually open a CM52 breaker, during maintenance, push the RED "OFF" pushbutton. The breaker should open and the breaker semaphore should indicate "TRIP".

RENEWAL PARTS

The CM52 breaker modular construction makes change out of replacement parts an easier task than on other network breakers. The following list tabulates the renewal parts for the type CM52 breaker:

36. Motor Assembly 125 VAC
37. Indicating Diagnostic Module (IDM)
38. Spring Release 125 VAC
39. Trip actuator
40. Auxiliary Switch a. Position A (brkr use only) L/H rear b. Position D-4 form C R/H (std on all units)
41. BF1 Motor closing relay
42. BF2 Anti-close relay
43. Current Transformer
44. Control Power Transformer (480V only)
45. 480V Relay Potential Transformer (480V only)
46. 15A C.L. Fuses
47. Lifting Brackets
48. Lever-in Crank w/10mm Socket
49. Arc Chute Assembly
50. Test Switch.

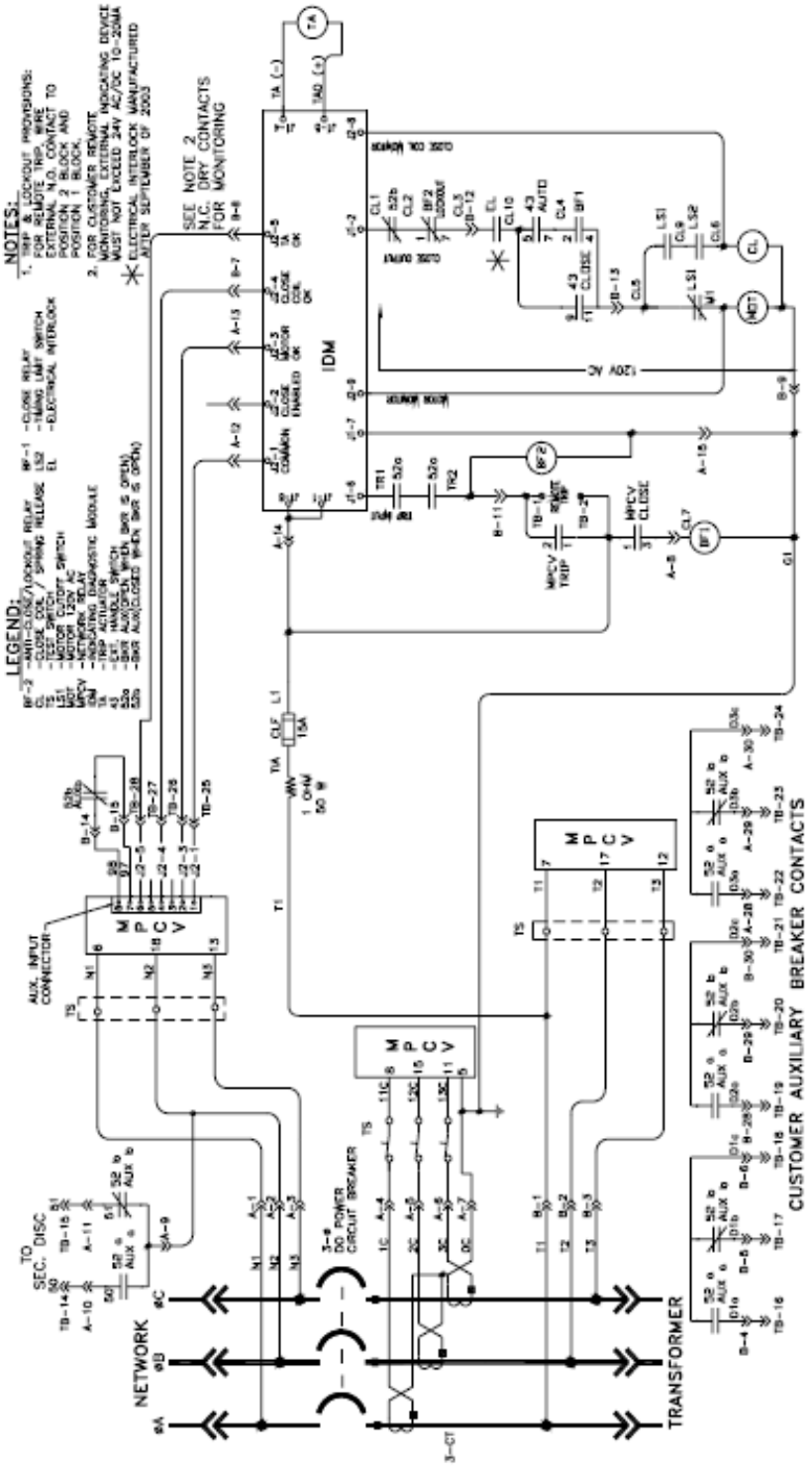

800A – 2000A 216Y/125 SCHEMATIC

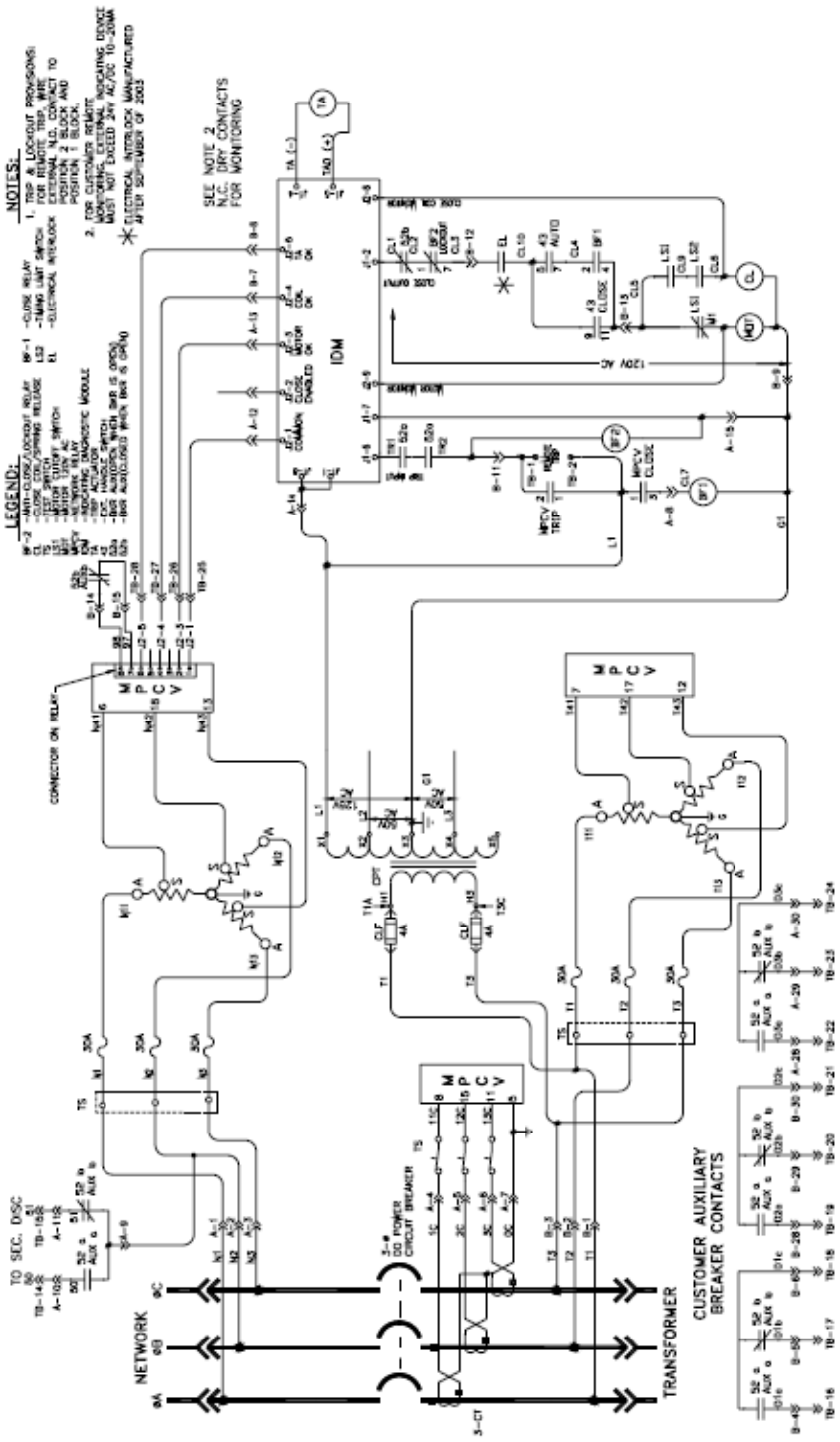

800A - 2000A 480/277 SCHEMATIC

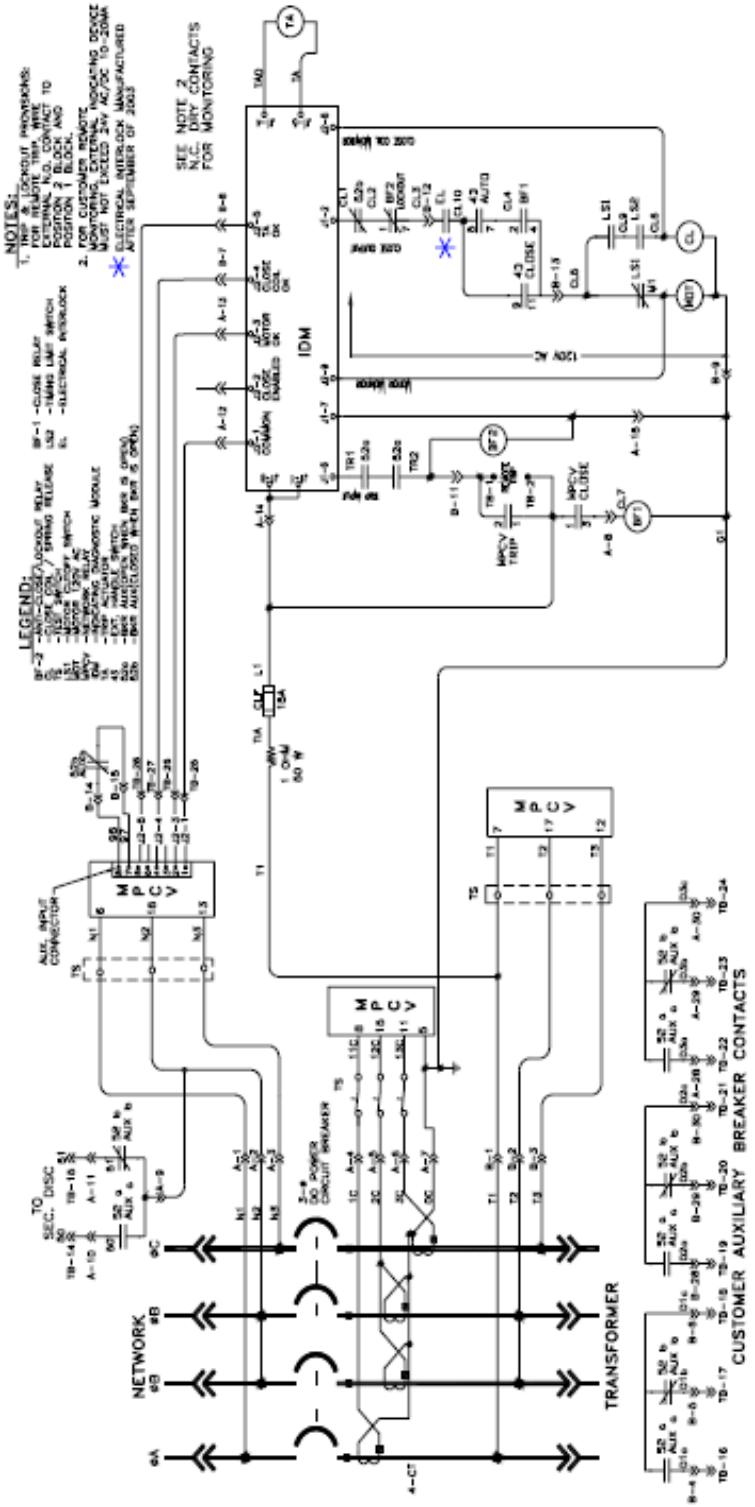

2250A – 3000A 216Y/125 SCHEMATIC

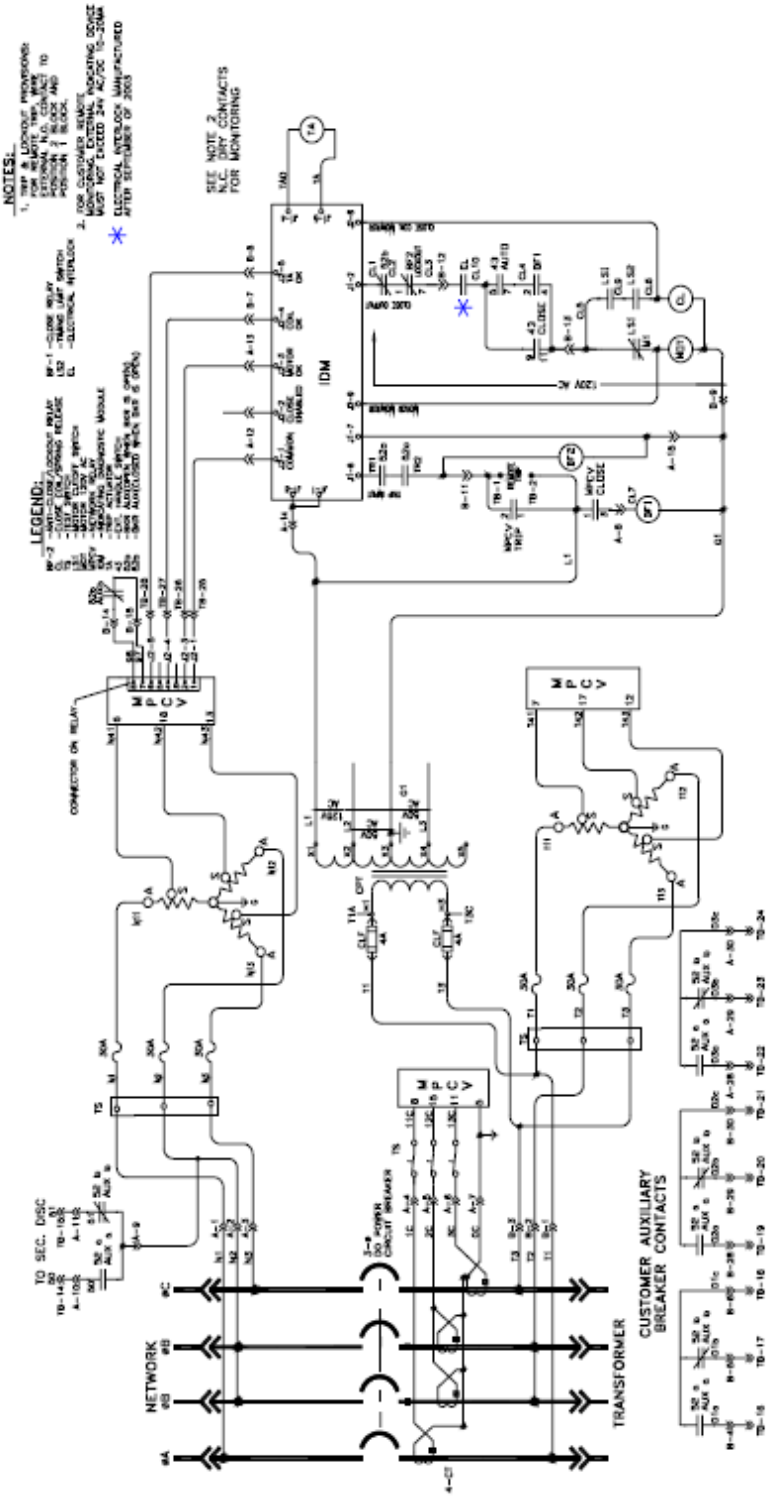

2250A – 3000A 480Y/277 SCHEMATIC

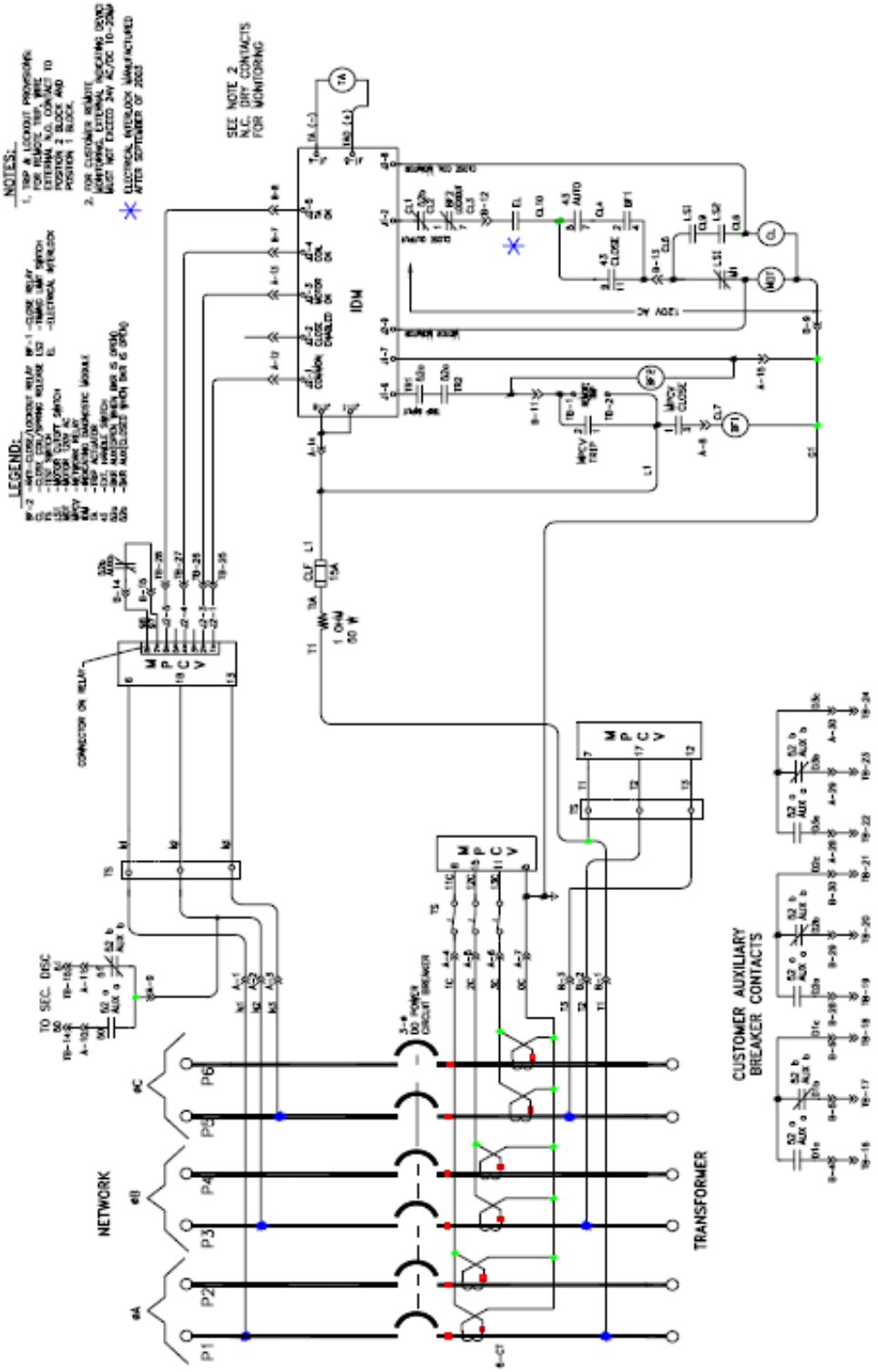

3500A – 4500A 216Y/125 SCHEMATIC

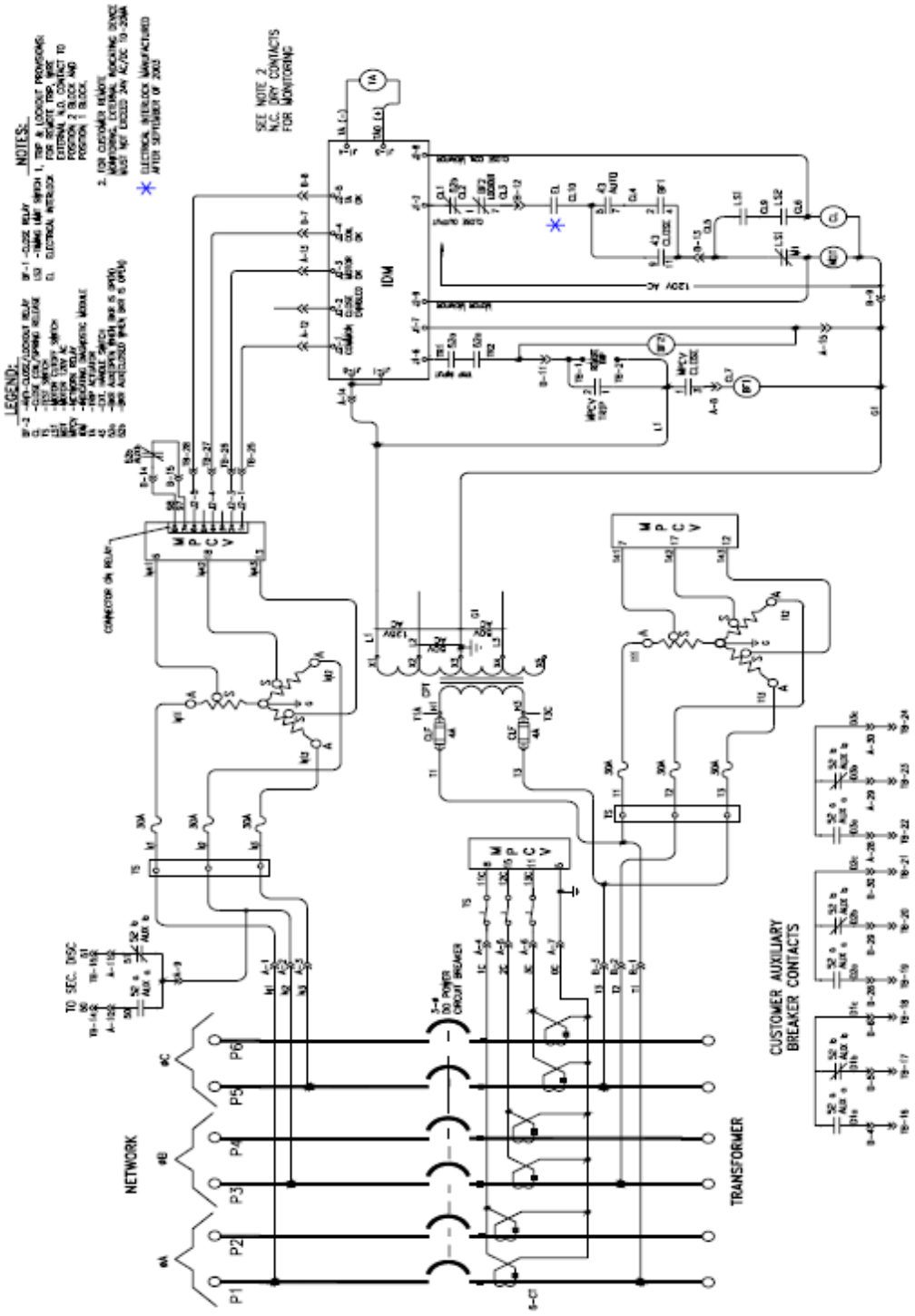

3500A – 4500A 480Y/277 SCHEMATIC

Addendum to IB-52-01-TE

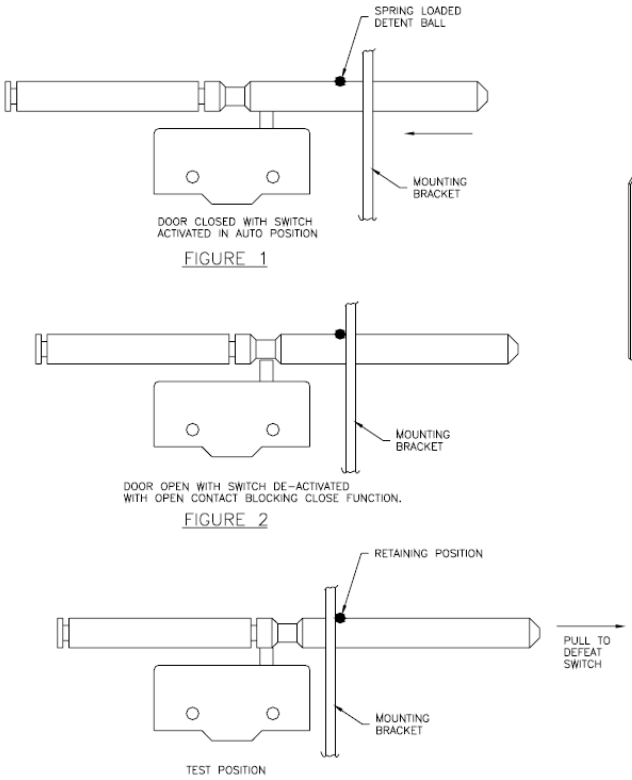

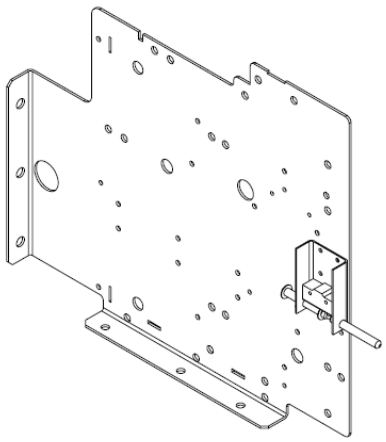

Electrical Safety Interlock

The CM52 Network Protector is supplied with as standard, an electrical interlock assembly mounted on the cassette side sheet on the same side as the electrical handle switch. The purpose of the interlock is to prohibit the close function of the Network Protector if the door of the Network Protector is opened and the external operating handle is left in the AUTO position. When the door of the Network Protector is closed (Fig. 1), the shaft moves and depresses a contact on a micro switch. The micro switch normal open contact, now closed, is inserted electrically in series with the motor closing circuit; allowing normal operation under the control of the Network Protector MPC series relay. However, when the door of the protector is opened regardless of the position of the external handle position, the shaft is spring biased and thereby positions itself to clear the micro-switch pushbutton providing a N.O. contact in the close circuit (Fig. 2), this would prevent an automatic closure by the MPC series relay. When testing the type CM52 Network Protector either disconnected fully or in the test position, this interlock will need to be defeated in order to complete the close circuit (Fig. 3). A spring loaded detent ball is provided in the design to hold the switch in the closed position to allow testing. Pull the shaft toward you until the spring ball is in front of the mounting bracket, in this position the CM52 unit can be tested. Due to the detent design, the Interlock will reset itself if the tester forgets and leaves the shaft in the test position once the door is closed.

EVERSOURCE MAINTENANCE PROGRAM	Document Number: **6.29B Rev. 3** Document Name: **Network Protector CMD Major Maintenance**
Owner Name:	John Dipaola-Tromba
SME Name:	C. Cory Morgan
Effective Date:	July 1, 2017

Approvals:

Connecticut:

Name: Anthony A. Anzalone Anthony A. Anzalone
Title: Director – Stations Operations
Date Signed: **06-26-2017**

Name: Jennifer A. Schilling_____
Title: Director – Strategy & Performance
Date Signed:

PSNH:

Name: James C. Eilenberger James C. Eilenberger
Title: Director – System Engineering
Date Signed: **06-26-2017**

Massachusetts:

Name: Paul R. Renaud Paul R. Renaud
Title: Vice President - Engineering
Date Signed: **06-27-2017**

Ensure you are using the current revision by verifying it against the controlled electronic copy located on the Distribution Engineering Standards Bookshelf or the Regulated Businesses Policies and Procedures Lotus Notes Database.

CMD Network Protectors – Major Maintenance

CAUTION

No modifications to network protectors shall be made, either temporary or permanent, without prior approval of the Distribution Engineering Department.

Stop the job, place equipment in a safe condition, and contact Supervision if the process does not proceed as expected, if unusual situations occur during the performance of the process, or any significant problems occur during maintenance activities.

Before You Begin

Prior to assigning work on network protectors:

1. The Supervision shall, prior to assigning personnel to perform “Work” on a network protector, ENSURE the person(s) responsible for performing the “Work” is fully qualified in accordance with operating company requirements
2. The Supervision shall, ensure that all employees are properly trained and qualified to perform this work, and that all appropriate PPE and safety requirements are met, including but not limited to those defined within the following documents:
    - TD 211, “When to Wear FR Clothing”
    - TD 952, “Protection of Personnel Entering Enclosed Spaces” (Connecticut & Western Massachusetts only)
    - TD 955, “Confined Space Requirements”
    - Eversource Employee Safety Manual
    - TD -877 Managing Arch Flash Hazards on CL&P Distribution Facilities (Connecticut ONLY)
3. The Supervision shall, ensure those performing the work are aware that of the following PPE requirements whenever working in Underground Vaults & Manholes:
    - Safety Glasses with side shields
    - EH (Electrical Hazard) rated boots
    - High Voltage gloves
    - FR (flame resistant) clothing, as specified in TD 211
4. Whenever “Work” is performed on a network unit as defined in paragraph 5 of this procedure, the following PPE is required :
    - Protective Arc Flash Hood (Beehive), (Stock Code 507687) or company approved equivalent.
    - Safety glasses with side shields
    - Minimum of low voltage (Class 0) rubber gloves (use of High Voltage Rubber Gloves is preferred)
    - Double layer of full body FR Clothing (i.e., FR shirt and pants plus full body FR coverall)

5. All persons performing “Work” on Network Units as defined below and those persons within the immediate work zone while “Work” is being performed shall wear at minimum double layer full body FR clothing, minimum 25 cal. FR rated hood (beehive type with built-in arc rated face shield), safety glasses and, minimum of low voltage (Class 0) rubber gloves (high voltage rubber gloves preferred). As defined in this document, “Work” includes the following tasks:

   - installing or removing transformer links and network fuses
   - rolling or racking out the protector
   - phasing the unit
   - connecting test leads to an energized bus
   - obtaining transformer and network voltages
   - test probe usage prior to installing links and network fuses
   - or any other work performed inside the network protector enclosure with the transformer and/or network bus energized

6. Prior to accessing manholes and vaults to investigate, inspect or work on a network unit in a single transformer vault, the maintenance records for that unit will be reviewed for condition of the unit.

   - If the records indicate that a major maintenance was completed within the maintenance cycle per the Eversource Maintenance Program and the unit has no major deficiencies, work may commence on the network transformer with the unit energized following all applicable company procedures and the protocols. (Applicable only to Connecticut & Western Massachusetts)

   - If the records do not indicate that a major maintenance was completed on the unit within the maintenance cycle per the Eversource Maintenance Program or major deficiencies have not been addressed, then the primary feed to the unit will be de-energized prior to commencement of maintenance work. The maintenance work on the unit will then take place with the unit de-energized, and only the secondary cables will be energized back from the street grid during the work. This will only apply to single transformer vault units.

   - The deficiencies described below, require the primary circuit to be de-energized in accordance with the operating policy.
     - Major maintenance not performed within the maintenance cycle required by the NU maintenance manual
     - Low oil level (below sight glass / gauge level) in primary switch or transformer or dielectric quality of oil below acceptable level
     - Any other significant defect or abnormal condition that may affect the safe operation of the network protector or transformer, such as, free standing water in the primary switching or transformer oil sample, excessive damage / corrosion in the network protector or other defect that requires immediate repair to return to service.

7. For cases where multiple network transformers exist in a vault, it will generally not be possible to de-energize all of those units for a variety of reasons. Therefore, prior to working on a network transformer, where multiple network transformers exist in a vault, maintenance records shall be reviewed for major deficiencies and/or major maintenance

completion within the maintenance cycle per the Eversource Maintenance Program prior to working in the vault.

- If records indicate that major maintenance for all transformers within the vault is up-to-date, and that there are no major deficiencies, then work may proceed.
- If major deficiencies or major maintenance was not completed, management will jointly work with employees for the appropriate steps to follow.

8. With the exception of the commissioning of a new network unit, 480V/277V network units shall have major maintenance completed with the primary de-energized. 216V/125V network units may be worked on with the primary energized as long as no oil work (i.e. oil sampling, topping off and/or retro-filling) is being performed.
   - Network major maintenance that includes any oil work (i.e. primary equipment oil sampling, topping off or the like) shall only be completed with the primary equipment de-energized
9. Job Setup: Work zones, requirements for various jobs, switching requirements. All arrangements should be completed or setup prior to beginning the job. These include cones, signage, and police or traffic control. Check holes prior to entry for cleaning needs, i.e. pumping water, debris, contaminates, visible oil, and providing samples for lab analysis.
10. Review the manufacturer's manuals for all safety notations (Danger, Warnings, and Cautions), as needed. These may be in sections of the manual other than with the instructions.
11. Supervision shall ensure the assigned workers have primer, paint, and any additional material needed for cleaning and preservation of the exterior of the network protector prior to departing the work center.
12. Prepare the vault for entry.
    - Check for dangerous atmospheric conditions before entering the vault using company-approved atmospheric sampling equipment
    - Ventilate the vault, if required, in accordance with the Eversource Employee Safety Manual.
    - Remove any standing water or debris from the vault in accordance with ENVIROWI-0105 or company-specific requirements, as required. This is located in the Environmental and Facility Procedures section of the Distribution Engineering Standards Bookshelf.

Network Protector Tools

The following fully insulated tools are available and may be useful for Network Protector service:

Tool Description	NU Stock Code
Wrench, Torque, 1/2” drive	572599
Wrench, Socket, extension bar, 1/2” drive, 12” long	572576
Socket size 3/4”, 1/2” drive, 6 pt.	571478
Socket size 9/16”, 1/2” drive, 6 pt.	571477
Wrench, Socket, T Handle, 33” long, 9/16” socket	572573
Wrench, Socket, T Handle, 33” long, 3/4” socket	572574
Wrench, Socket, T Handle, 33” long, 7/8” socket	572575
Test Probe	526792
ETI Relay Programmer	0400188*
MPCV Relay Programmer	527762

The above listed wrenches may be available in other lengths by special order. The insulation from the time of original manufacture has been increased at the request of Eversource and stock code revisions will reflect “FI” for “Fully Insulated”.

NOTE

The orange surface insulation on these tools has a yellow undercoat. If yellow is detected on the surface due to cuts or punctures, the surface insulation has been compromised and the tool should be retired.

Rolling Out the Protector

Reminder: Although it is not shown in some of the following figures, proper PPE must be worn while performing maintenance and testing on all Network Protectors.

NOTE: The CMD Network Protector is a dead-front, racked-in device that does not require the handling of energized links and/or fuses.

The CMD requires the following procedure for its removal from the housing.

1. Prior to operating the network protector handle, vent the protector cabinet as follows:
   a) Loosen the enclosure cover bolts on the side opposite from the operating handle in order to vent the protector.
2. Operate the network protector handle while standing to the side of the enclosure or as far away as possible from the front of the enclosure. Leave the handle in the "**OPEN**" position.
3. Verify that the network protector mechanism is in the open position as follows:
   a) Inspect the network protector position indicator through the network protector enclosure window. Verify the status flag reads **OPEN**.

   CAUTION:
   If the protector contacts do not open, *stop all work* and place the network protector in a safe condition and contact your supervisor.

   b) Use a clamp or rope style current transformer (CT) around the conductors of each phase, verify that the current on each phase is zero. (Zero current may indicate that the breaker position is open or the network protector fuses or cable limiters are blown.)
   c) Record the secondary voltages.
4. Lift the extension rails into place.
5. Press the trip lever on the breaker and lift the shutter by hand. (The trip lever must remain pressed in to allow the shutter to be raised.)

6. Inspect the CMD network protector and correct any of the following conditions. Protectors must be racked out for all repairs, except as noted below:

NOTE:
The following conditions must be made safe before racking out the protector and repaired after the protector is racked out.

- CMD Ratchet Wheel Assembly, Westinghouse Technical Service Bulletin No. 930614, Dated June 14, 1993 for units produced after November 1992. (Attachment #1).
- CMD Auxiliary Switch Stop Retrofit Kit, Westinghouse Technical Service Bulletin No 890105 for units produce from January 1987 to August 1987. (Attachment #2).



Figure 1 – The Levering Crank

7. Insert the levering crank (Figure 1) into the Lev-in device and rack the breaker out of the enclosure.

8. Pull the breaker to the edge of the rails (using the handles on the shield) to ensure the anti-tilt pins are under the extension rail keepers. See Figure 2. (This will ensure the breaker does not tilt during maintenance.)

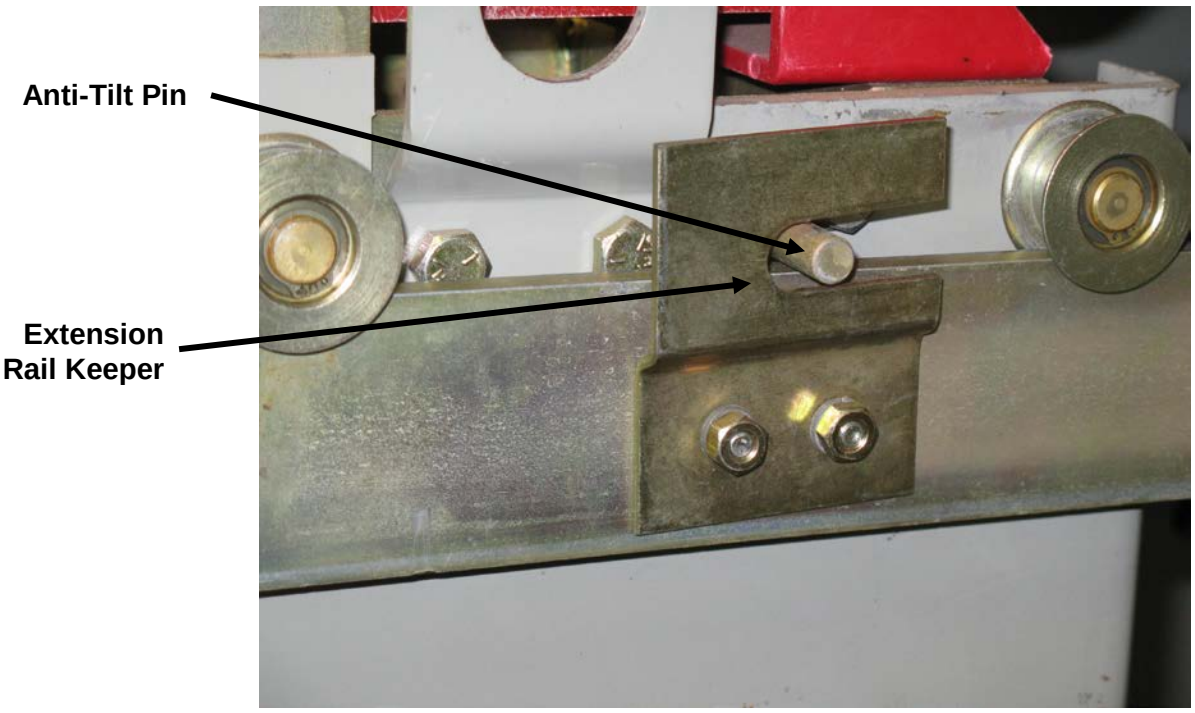

Figure 2 – Breaker on the Edge of the Rails

CAUTION

If a capacitor is present, always press the red button down when performing maintenance in order to prevent electric shock.

9. Press the red button if a capacitor is present. This step does not apply to older models that do not utilize the capacitor.

NOTE

Convert all DTA actuators to CTD at this time. See Section 1 of the Network Protectors Maintenance Manual for details.

10. Turn the three thumbscrews located toward the top of the shield counter-clockwise and lift up so that the shield can be removed.

Breaker Mechanical Inspection:

1. Record the counter reading.
2. Check for broken or damaged barriers on breaker and housing.
3. Check for any signs of liquid entry into enclosure, transformer throat, etc.
4. Check for indication of overheating.
5. Check for loose hardware.
6. Check the arc chutes. Look through them to ensure the vents are free and clear.
7. Manually close the breaker with the charge handle.
8. Install a blocking bar over the trip bar to ensure the breaker is not accidentally tripped. See Figure 3.

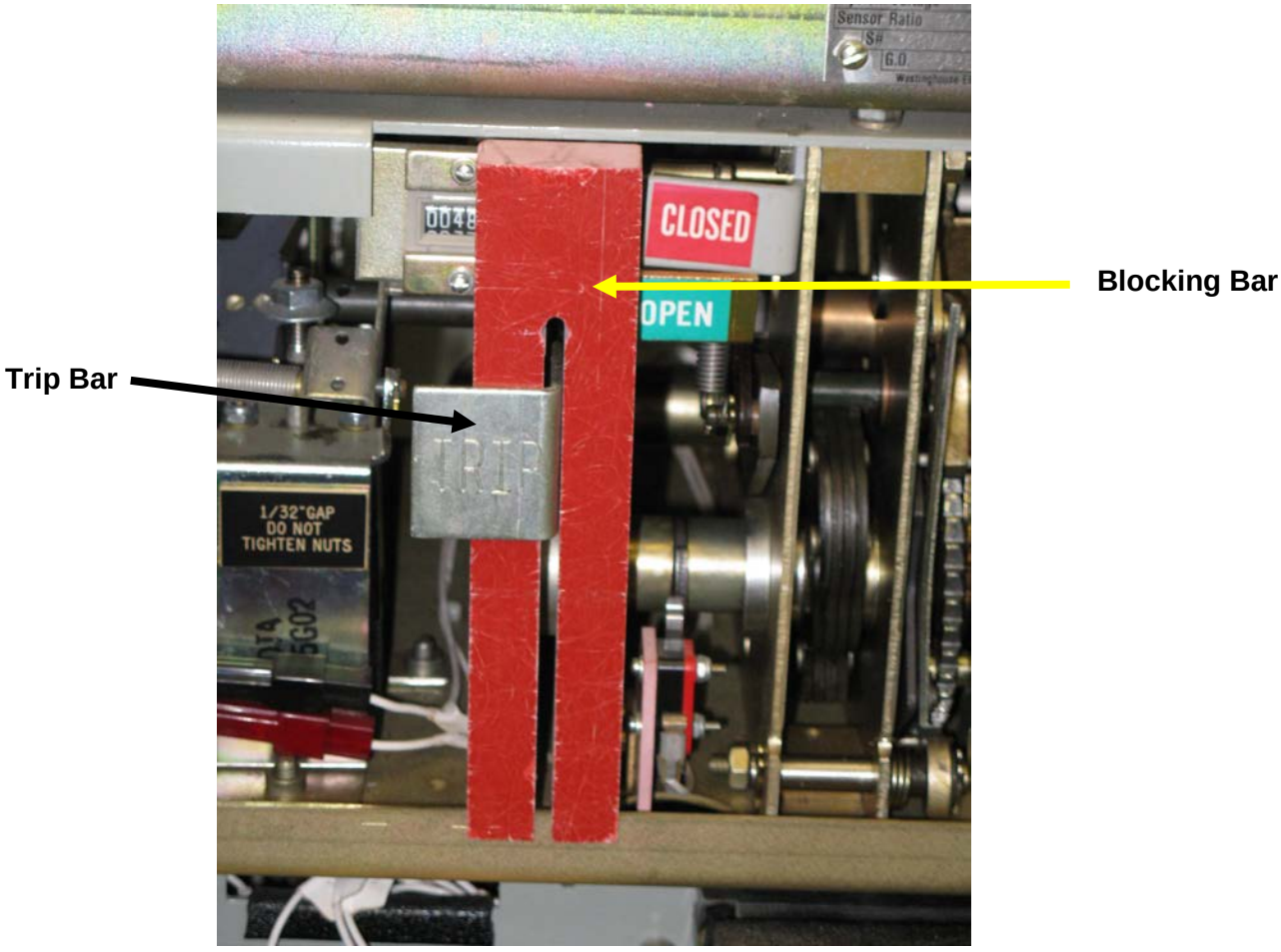

Figure 3 – The Blocking Bar

9. Check the contact pressure using the CMD contact pressure gauge. **NOTE**: The procedure varies with the size of the network protector. Use the procedure in the following section that applies to the protector on which you are working.

Checking Contact Pressure on Large Frame (2500 – 3000A) CMD Protectors

1. Ensure that:
   - The breaker is racked out onto rails.
   - The capacitor is discharged using the pushbutton.
   - The front shield and arc chutes removed.
   - The breaker is in the **closed** position.

CAUTION:
The Contact Pressure Gauge is NON-INSULATED.

2. Use the bottom edge of the contact pressure gauge as shown below. The gauge is 0.13 thick and 0.19 wide at the bottom. Use the 0.19 side for checking contact adjustment. See Figure 4.
   - Use the top of the gauge for 1875 Amp protectors.
   - Use the handle for 3000 Amp protectors.



Figure 4 – The Contact Pressure Gauge

3. Place the contact gauge between the moving head and the side of the cage assembly. See Figure 5.

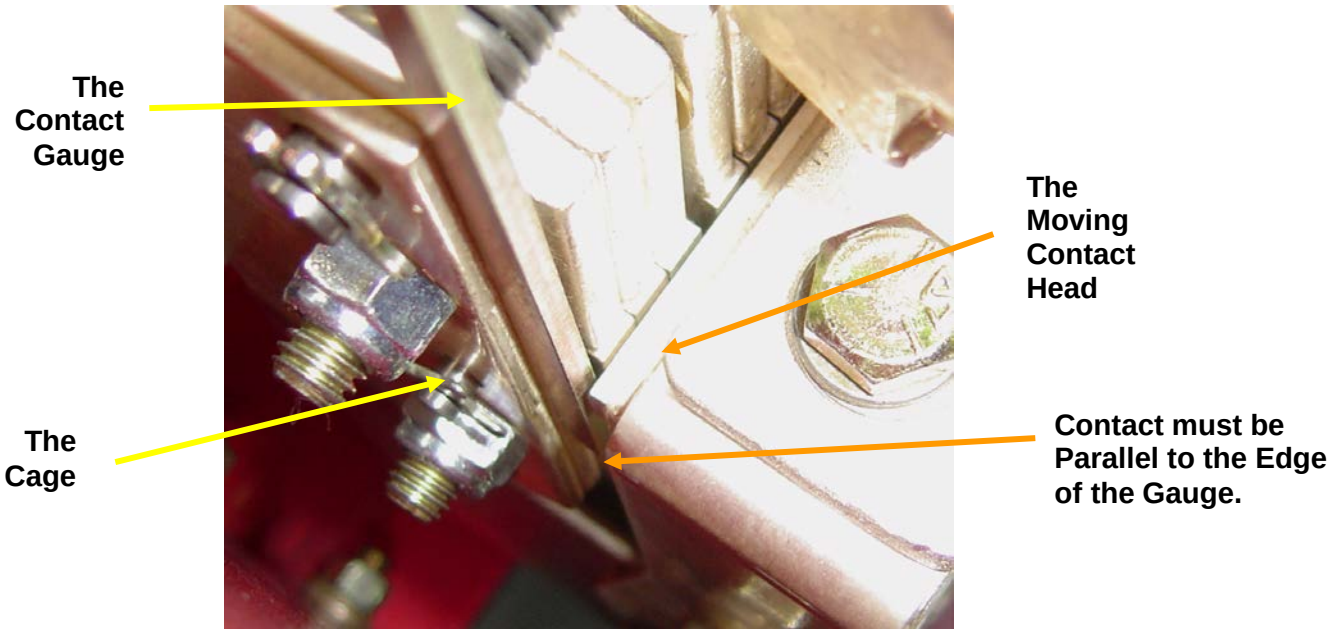

Figure 5 – Checking the Contact Adjustment

4. Use the bottom edge of the gauge to determine if there is a lot of movement between the cage and the moving contact head.
5. Slide the handle side of the gauge to ensure the minimum gap exists. It should fit into the gap without a lot of additional clearance. See Figure 6.
   - If the gap is too small for the handle side of the gauge, adjust the contacts until the gauge will slide into the gap with interference.
6. Adjust the contacts as necessary.

> **NOTE**
> It is essential that the CMD contact pressure is check and adjusted as necessary to ensure the proper functionality of the protector.

7. Once correct pressure is set, lock down top elastic stop nut using 20 ft/lbs for the large adjusting screw and 15 ft/lbs for the small adjusting screw.
8. Remove the blocking bar.
9. Trip the protector and close it manually to ensure correct pressure is set. (Slight adjustment many be needed after closing.)

Checking Contact Pressure on Small Frame (1875A) CMD Protectors

1. Ensure that:
   - The breaker is racked out onto rails.
   - The capacitor is discharged using the pushbutton.
   - The front shield and arc chutes removed.
   - The breaker is in the **closed** position.
2. Use the top of the contact gauge and a small mirror to view the contact pressure.
   - Gauge Part # **3670A81H03**
   - Contact Mirror # **PROTO2373**
3. Locate the gap created by the cage and the main contacts when the breaker is in the **open** position. See Figure 6.

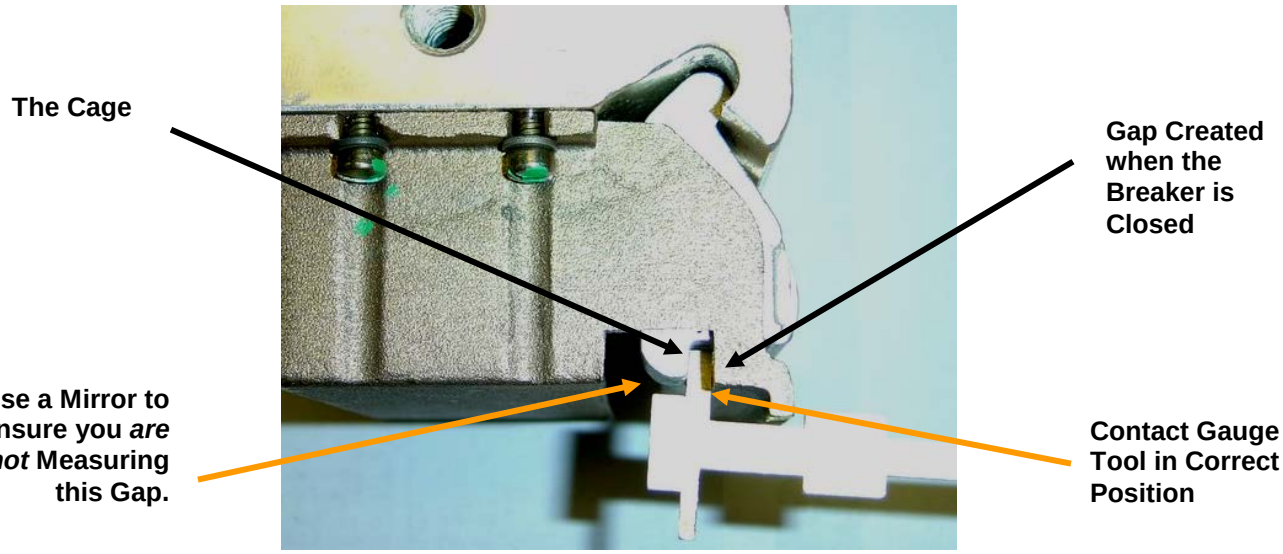

Figure 6 – Checking Small Frame Protector Contact Pressure

4. Slide the **Go** side of the gauge to ensure the minimum gap exists. It should fit into the gap without a lot of additional clearance. See Figure 7.
   - If the gap is too small for the Go gauge, adjust the contacts until the gauge will slide into the gap with interference.

5. Use the **No Go** side of the gauge to ensure the gap is not too large. See Figure 7.
   - If the **No Go** side of the gauge fits into the gap, adjust the contacts to reduce the gap to the point where the **No Go** gauge no longer fits, but the gap is still large enough for the **Go** side of the gauge.

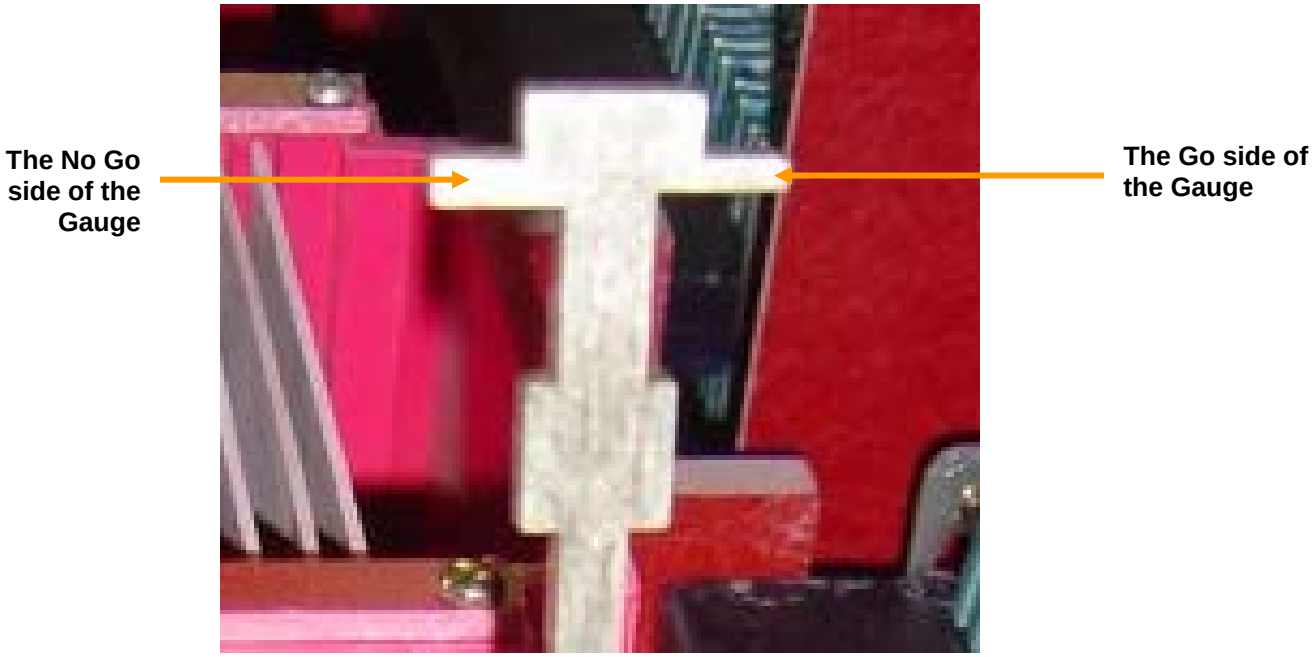

Figure 7 – The Go / No Go Gauge

> **NOTE**
> It is essential that the CMD contact pressure is checked and adjusted as necessary to ensure the proper functionality of the protector.

6. Once correct pressure is set, lock down top elastic stop nut using 20 ft/lbs for the large adjusting screw and 15 ft/lbs for the small adjusting screw.
7. Remove the blocking bar.
8. Trip the protector and close it manually to ensure correct pressure is set. (Slight adjustment many be needed after closing.)

Test Sequence:

The following sections are a series of tests defined to ensure proper operation at normal condition and at fault duty. It is important to perform the following tests in *this* order:

1. Manual Operation Test
2. Mechanical Electrical Testing (Voltage Only Testing)
3. Relay Tests
4. Ground Fault Test (480V Unit Only)

Test 1 – Manual Operation Test

1. Exercise the unit at least five times – mechanically closing and mechanically tripping the CMD breaker.

Test 2 – Mechanical – Electrical Testing (Voltage Only Testing)

Mechanical testing is defined as a “voltage only test” without the use of any network relays (electro-mechanical, solid state or digital). This testing is defined in the IEEE standard for Network Protectors C57.12.44. The basis for this type of testing is the minimum trip and close criteria required.

1. Remove all Network Relays.
   - The phasing relay position type (CNJ) must be jumpered out with the relay removed. (Points 4 &5 on the relay terminal block).
   - A CNJ jumper plate may be required to complete the circuit

CAUTION

Failure to connect the leads in the correct sequence will cause damage to the Network Protector Test Set.

REMINDER

Proper PPE must be worn while attaching leads to an energized bus.

2. Connect the Test Set according to the manufacturer’s technical manual and local operating system conditions (phasing).
3. Place a magnet over the Auto button on the JA – JA bracket. See Figure 8.

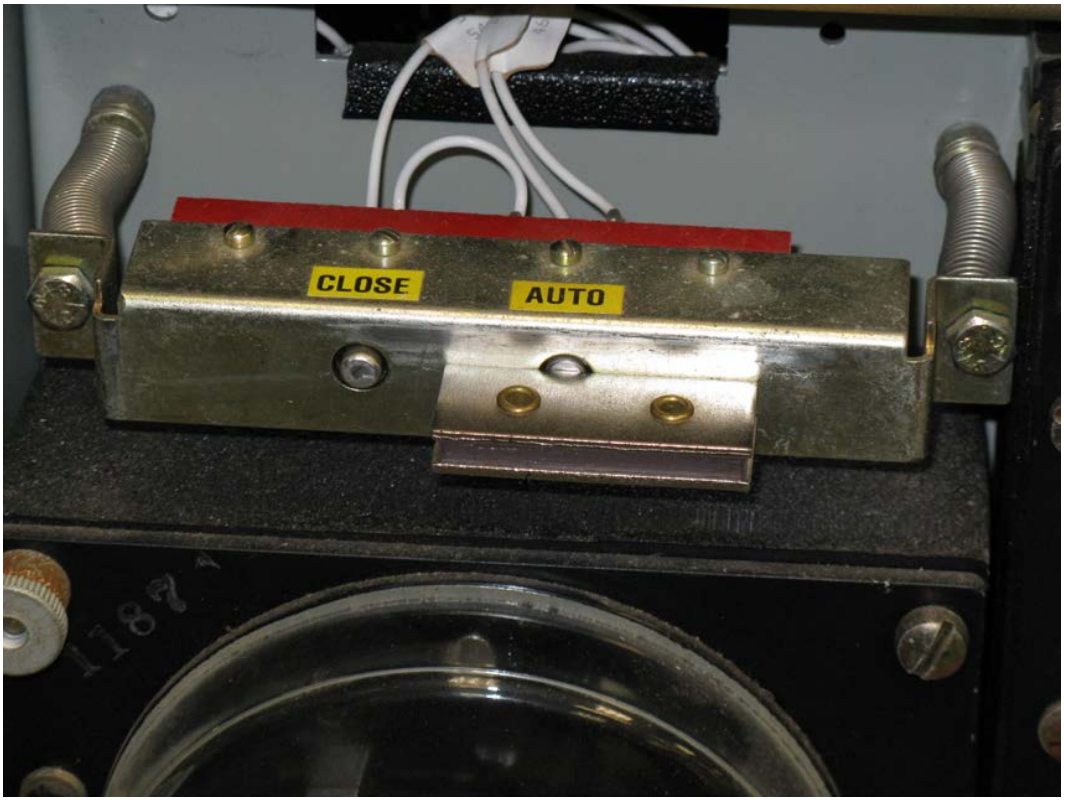

Figure 8 – Magnet Placed Over AUTO Button

NOTE
The schematic will be needed to ensure the proper wires are completed in the closing circuit.

4. Place the Close jumper accordingly on the secondary disconnects or the fuse block to complete the close circuit.
5. Operate the protector at full voltage to ensure everything is operational.

MIN CLOSE TESTING

NOTE
The following procedure takes place after the breaker has been operated at full voltage.

1. Apply 73% of the L-L system voltage. See Table 1. The breaker should NOT close at this level. If the breaker closes, the motor control relay will need adjustment via the adjustable resistor.
2. Apply 80% of the L-L system voltage. See Table 1. The breaker should close.

MIN TRIP TESTING

NOTE
The CMD Protector has two possible testing procedures. Replace all DTA actuators with Capacitive Trip Devices.

Table 1 Test Values

Test	%	125/216V	277/480V
a) Minimum Trip	7.5%	16.2V or Less	36.0V or Less
b) Minimum Motor Close Voltage	73%	158V or Less	350V or Less
c) No Pickup (Motor Relay)	73%	158V or Less	350V or Less
d) Min Pickup (Motor Relay)	80%	160V – 173V	354V – 384V

Mechanical – Electrical Testing - continued

Capacitor Testing

1. Close the protector using full voltage.
2. Turn the test set off. (The set will not be turned back on until this test is completed.)
3. Press the trip button on the test set.
4. Manually charge the protector via the handle.
5. Continue to trip the protector via the push button or jumper a minimum of 3 times. (If the capacitor cannot trip the breaker 3 times, it must be replaced.)

Anti Close Relay Testing

The CMD is equipped with a BF2 relay that ensures the breaker opens the close circuit and engages the trip circuit.

NOTE

The breaker must be open for this test.

1. Connect the Common & Close leads to the relay terminal block.
2. Connect the Jumper to Common & Trip points on the relay terminal block.
3. Apply rated voltage to the protector. (**NOTE**: BF2 should pick up.)
4. Press the Close button on the test set. The motor should not operate.
5. Manually start to close the mechanism using the handle until the “W” switch changes states. (**NOTE**: The Anti Close coil must pick up)
   - The Anti-Close assembly should rotate the trip bar on the protector such that the breaker cannot be manually closed.

Test 3 – Relay Tests

Electro-mechanical Relay Tests

1. Perform the Master Relay Overvoltage test and adjust the relay as necessary in accordance with the following documents. Record the As-Found and As-Left values.
   - Network Protector Test Set Instructions
   - Relay Instructions
   - Network Protector Instructions
2. Perform the Phasing Relay Overvoltage test and adjust the relay as necessary in accordance with the following documents. Record the As-Found and As-Left values.
   - Network Protector Test Set Instructions
   - Relay Instructions
   - Network Protector Instructions
3. Perform the Reverse Current Limiting Trip test and adjust the relay as necessary in accordance with the following documents. Record the As-Found and As-Left values.
   - Network Protector Test Set Instructions
   - Relay Instructions
   - Network Protector Instructions
4. If a BN relay is installed, perform the Timing test and adjust the relay as necessary in accordance with the following documents. Record the As-Found and As-Left values.
   - Network Protector Test Set Instructions
   - Relay Instructions
   - Network Protector Instructions

Relay Tests (continued)

Solid State / Microprocessor Relays

1. Perform an Overvoltage test and adjust the relay in accordance with the following documents. Record the As-Found and As-Left values.
   - Network Protector Test Set Instructions
   - Relay Instructions
   - Network Protector Instructions
2. Perform a Reverse Current Trip test in accordance with the following documents. Record the As-Found and As-Left values.
   - Network Protector Test Set Instructions
   - Relay Instructions
   - Network Protector Instructions
3. If a Time Delay is used, perform a Time Delay test in accordance with the following documents. Record the As-Found and As-Left values.
   - Network Protector Test Set Instructions
   - Relay Instructions
   - Network Protector Instructions

Test 4 – Ground Fault Test (480V units only)

CAUTION

The ground fault protection circuit between the protector and the customer main service is owned and maintained by the customer. Testing the lock out may call for all protectors to trip. An up-to-date drawing must be made available and reviewed to determine those steps which must be taken to prevent tripping of all protectors..

Verify trip from lockout and block the close of the protectors on all units having a ground fault scheme.

NOTE

The Ground Fault system is typically Customer-owned, and the Lockout is typically Eversource-owned. It is important to have an up-to-date print of the scheme prior to performing a test.

This test is only to be performed on those units equipped with a ground fault system.

CMD Re-install Procedure

1. Re-install the arc chutes, front and front shield. Check to ensure the unit opens.
2. Roll the unit back into housing to its installed position.
3. With a CMD wrench, rack the protector back into the enclosure.
4. Apply anti-seize grease to door bolt hardware.
5. Apply gasket preservative to door gasket.
6. Tighten all door bolts. The tank is secure once the 2 jam (stop) nuts touch the tank.

> **NOTE**
>
> Do not use impact tools as this could lead to moving the stop nuts in place for proper sealing and cause premature door gasket damage.

7. Verify the protector enclosure is holding pressure using a pressure gauge/fill device. If it is not, perform a **leak check** on those network protectors with submersible enclosures as follows:
    - Pressurize the enclosure with 5 PSI of dry nitrogen.
    - Apply a soap solution to the door gaskets, enclosure penetrations, throat gaskets, operating handle gaskets, welds, etc.
    - Let this sit for 30 minutes.
    - Check for leaks by looking for soap bubbles. Fix any leaks if possible.
    - Record any leaks on the inspection form and alert supervision.
    - Reduce the pressure within the enclosure to (**see Addendum A**) psi.
8. Place operating handle in as-found condition.
9. Record the “as-left” counter reading.

Revision Changes

Revision 1 – Effective Date: **March 6, 2013**
Related Feedback – MS-0157

	Description of Changes
1.	Removed all references to TD 871, which has been superseded.
2.	Moved all cautions to before the steps to which they apply.
3.	Added list of insulated tools that may be useful for Network Protector maintenance.
4.	Deleted requirements for Megger and Ductor tests.
5.	Added step to “record the as-left counter reading” to the Re-install procedure.
6.	Step added to “record the test results” of the Insulation Resistance test.
7.	Replaced reference to Accident Prevention Manual with reference to NU Systems Employee Safety & Health Handbook.
8.	Appended Vendor Tech Manual to the end of the first two attachments.
9.	Removed Caution regarding oil leaking from the enclosure, as protectors do not contain oil.
10.	Revised ““Before You Begin” section to incorporate more detailed safety information previously contained in Network Operating Policy.

Revision 2 – Effective Date: **July 1, 2015**
Related Feedback – N/A

1.	Changed names of the Owner, SME, and Approvers on the Signature page, as required.
2.	Incorporated the following global replacements: • NU Maintenance Manual replaced by Eversource Maintenance Program. • CL&P replaced by Eversource Connecticut. • WMECO replaced by Eversource Western Massachusetts. • PSNH replaced by Eversource New Hampshire. • NSTAR replaced by Eversource Eastern Massachusetts. • NUMM replaced by EMP.
3.	Incorporated the following global replacements: • NU Safety Manual replaced by Eversource Employee Safety Manual.

Revision 3 – Effective Date: **July 1, 2017**
Related Feedback – N/A

1.	All stock codes changed to the new Maximo number.
2.	Approvers updated

Attachment #1

Date: June 14, 1993

subject: Technical Service Bulletin No. 930614 *

CMD Ratchet Wheel Assembly

To:

Enclosed is a copy of Technical Service Bulletin No. 930614. Please review this document with your customer. Our records indicate that your customer has obtained type CMD network protectors within the affected time period which may have mechanism ratchet wheels whose ratchet wheel pin has not been brazed as part of the assembly. Failure to remedy the situation may result in a CMD mechanism which becomes unable to CLOSE the breaker contacts. Replacement ratchet wheel kits can be ordered as style number 8230A56G01 at "NO CHARGE". The kit includes a new ratchet wheel, .500 "X" washer and a copy of this TSB. This TSB offers advice on detection of ratchet wheel pins which have not been brazed as well as disassembly / assembly of the mechanism to gain access to replace the ratchet wheel.

sincerely,

J.R.(Jock) Moffat

Product Sales Manager

Attachment #1

TECHNICAL SERVICE BULLETIN NO. 930614

CMD RATCHET WHEEL ASSEMBLY

WARNING: Failure to follow the instructions contained in this Technical Service Bulletin may result in death, severe personal injury or property damage.

Equipment Affected: CMD Network Protectors manufactured after November 19, 1992.

Problem Encountered: It has come to the attention of the Network Protector Group that ratchet wheel pins may not have been brazed into the ratchet wheel as specified on the ratchet wheel assembly drawing. The result is a ratchet wheel pin which may work itself loose in operation and jam the closing mechanism such that further breaker closures become impossible. The affected units are those manufactured after November 19, 1992.

RATCHET WHEEL PIN INSPECTION

To check the ratchet wheel pin for lack of braze material, advance the ratchet wheel, as shown in Figure 1., by operating the manual charging lever. Having the ratchet wheel pin in this position affords the best possible viewing angle. The right hand side of the ratchet wheel offers the best view. Observe the junction between the ratchet wheel pin and the ratchet wheel. If the junction is smooth, without voids, and the braze material has formed a small meniscus between the two surfaces, the pin has been properly brazed. If on the other hand, a black ring appears at the junction of the pin and the plating is not continuous around the pin, the ratchet pin braze is absent and the ratchet wheel must be replaced. Before proceeding, make certain that the charging springs have been discharged.

RATCHET WHEEL REPLACEMENT

1. REMOVAL OF RATCHET WHEEL

Refer to modified page 11 of the CMD renewal parts data booklet (copy attached). Remove and discard the .500 "X" washer, item 18, which attaches the right hand closing spring to its front mounted spring crank. Using a hook device, release the spring tension and remove the right hand spring from its spring crank. Keep the spring attached to its rear spring mount. CAUTION - although the spring is in the discharge position, it is preloaded. Proceed with CAUTION in performing this operation.

There are 13 items which must be removed from the right hand crank shaft to permit removal of the ratchet wheel. For ease of re-assembly, lay the items out on a clean cloth, in sequence. Refer to Figure 2., which shows the assembled basic mechanism and the itemized list of parts. Note, avoid removal of any of the applied grease to any of the mechanism components.

Attachment #1

To remove the ratchet wheel, disassemble in this sequence:

1. Loosen item 40, (.190-32 socket scr) and remove the spring crank, item 14.
2. Remove wide washer, item 13.
3. Disengage and remove manual closing reset spring, item 9.
4. Remove manual closing lever, item 3.
5. Remove thrust washer, item 8.
6. Remove thrust bearing , item 7.
7. Remove second thrust washer, item 8.
8. Detach oscillator return spring, shown on Figure 3., from the oscillator and remove oscillator, item 2. (removal of motor aids this task)
9. Remove spacer tube, item 17.
10. Remove first precision washer, item 15.
11. Remove right hand side charging plate. item 6.
12. Remove second precision washer, item 15.
13. Remove ratchet wheel, item 5.

To install ratchet wheel, perform the following sequence:

1. Make certain that the unremoved remaining precision washer, item 15, is centered about the ratchet wheel sleeve, item 16.

CAUTION - The position of the three precision washers, item 15, becomes critical in the stacking of the components on the mechanism crank shaft. Make certain that each precision washer is centered on the shaft and nests correctly with its neighboring component. Failure to position the precision washers will result in a mechanism crank shaft assembly which can bind up during operation.

2. Replace the ratchet wheel, item 5, over the ratchet wheel sleeve, item 16. Make certain that the teeth face upward when viewed from the front. Refer to Figure 3.
3. Install the second precision washer, item 15, on the right hand face of the ratchet wheel, centered about the ratchet wheel sleeve.
4. Install the right hand charging plate, item 6, matching the position of the left hand charging plate. Refer to figure 3.
5. Install the third precision washer, item 15, on the charging plate and replace the spacer tube, item 17, such that the precision washer is centered.
6. Install the oscillator, item 2, and reattach the oscillator reset spring.
7. Install the first thrust washer, item 8.
8. Install the thrust bearing, item 7.
9. Install the second thrust washer, item 8.
10. Install the manual closing lever, item 3, making certain that the driving pawl engages the ratchet wheel.
11. Install the manual closing reset spring, item 9.
12. Install the wide washer, item 13.
13. Install the right hand spring crank, item 14. It should be in the same position as the left hand spring crank.
14. Tighten the .190-32 socket scr. to secure the spring crank.

Attachment #1

15. Install the right hand closing spring by use of the "Z" tool as depicted in the modified page 11 of the renewal parts data booklet.

    CAUTION - care must be exercised when performing this task as considerable force is required to preload the spring to its reset position.

16. Install a new .500 "X" washer, included in kit, to secure the spring end to the spring crank.

Test the assembled mechanism by manually operating the closing springs through the use of the manual closing crank. The mechanism should charge its springs without binding and close the breaker smartly after the springs have been fully charged.

Attachment #1

RATCHET WHEEL PIN INSPECTION

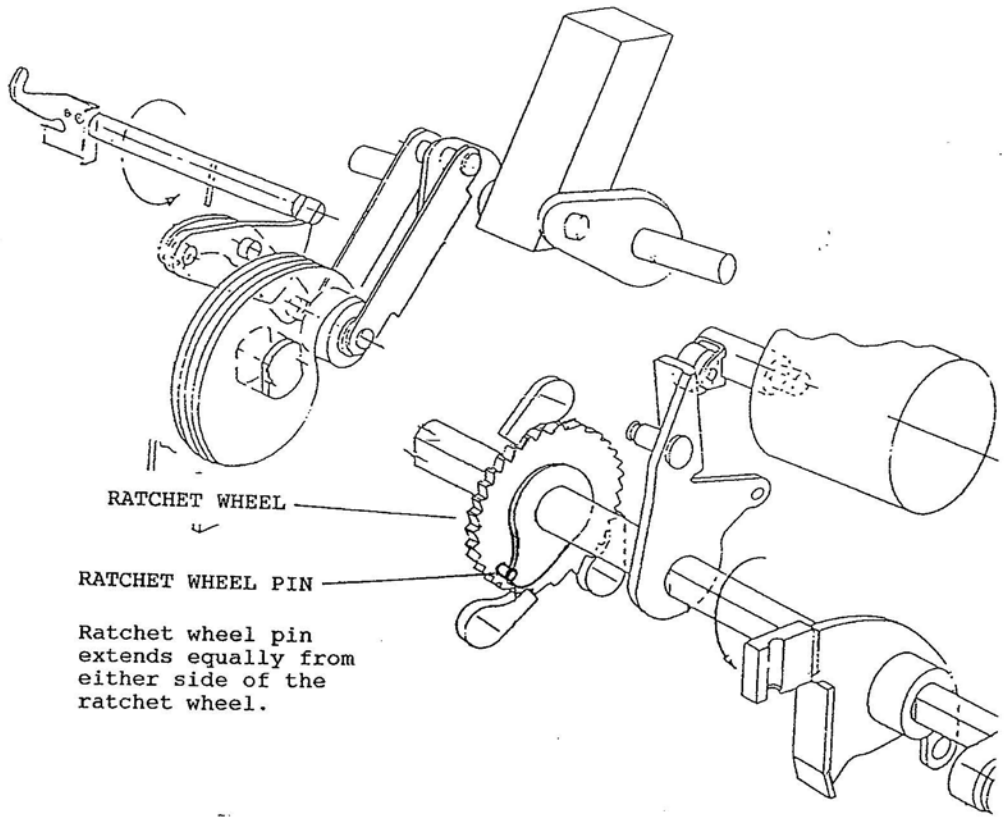

NOTE - advance the ratchet wheel to this position by use of the manual charging lever.

Figure 1.

Attachment #1

CMD 1875 Amp-3000 Amp Network Protectors

Fig 4 Mechanism Components – 1875 Amp

Item No.	Description
1	Basic Mechanism
2	Direct Trip Actuator (DTA)
3	Trip Counter/Indicator Flag Ass'y.
4	Trip Bar
5	Transformer Ass'y.
6	Tension Link Ass'y.
7	Pole Shaft
8	Push Rod
9	Motor
10	Closing Spring
11	Opening Spring
12	Rectifier
13	Socket Mounting Bracket (Specify 216V or 480V)
14	.112-40 x .50 Fil Hd Scr.
15	Pin (L. H. Pole)
16	Pin (Center Pole)
17	Pin (R. H. Pole)
18	.500 "X" Washer
19	Pin
20	Spring
21	Spring
22	*Complete Unit (480V)
23	*Complete Unit (216V)

*Also includes Fig. 5, Fig. 6, Fig. 7 and Fig. 8

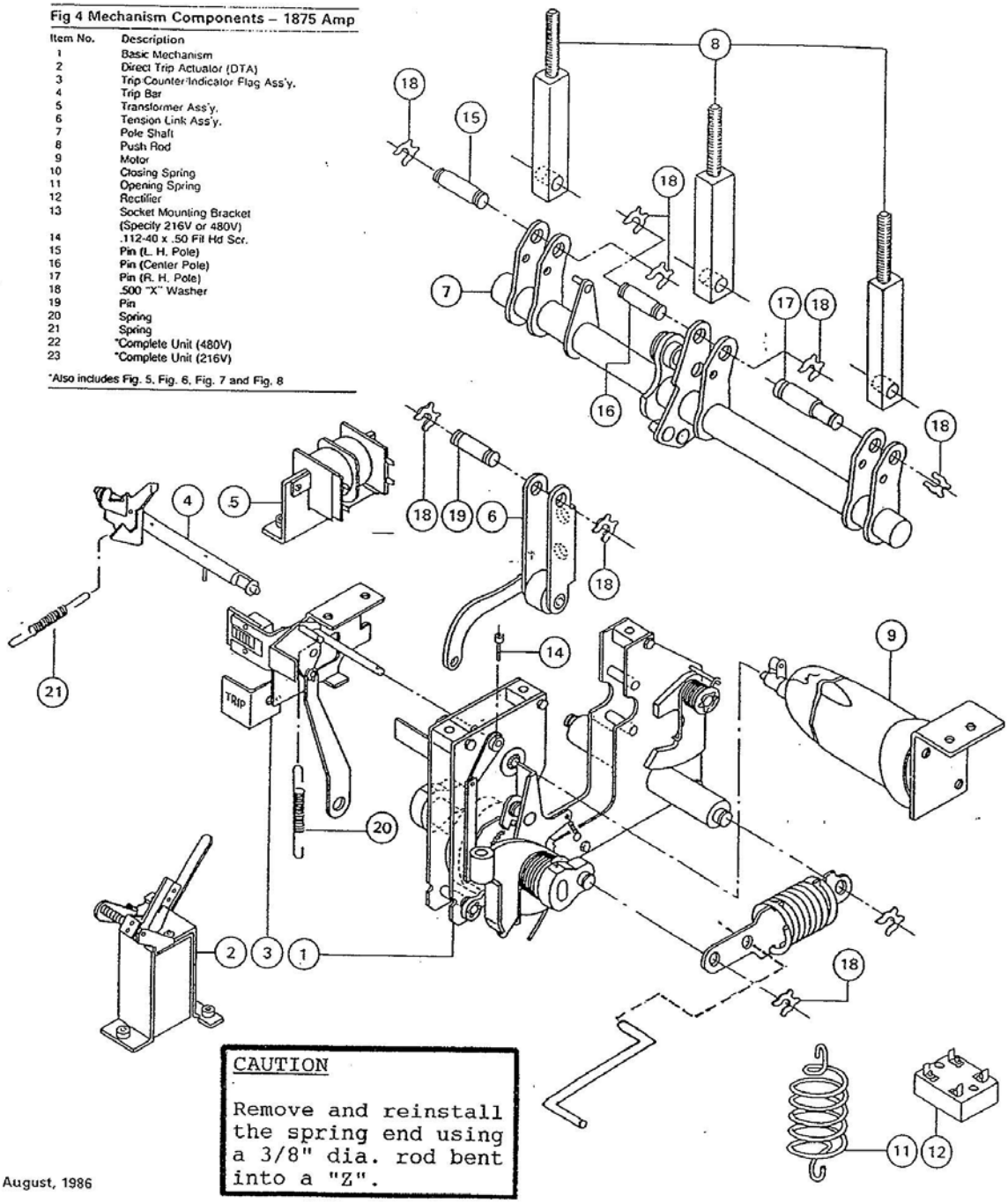

Attachment #1

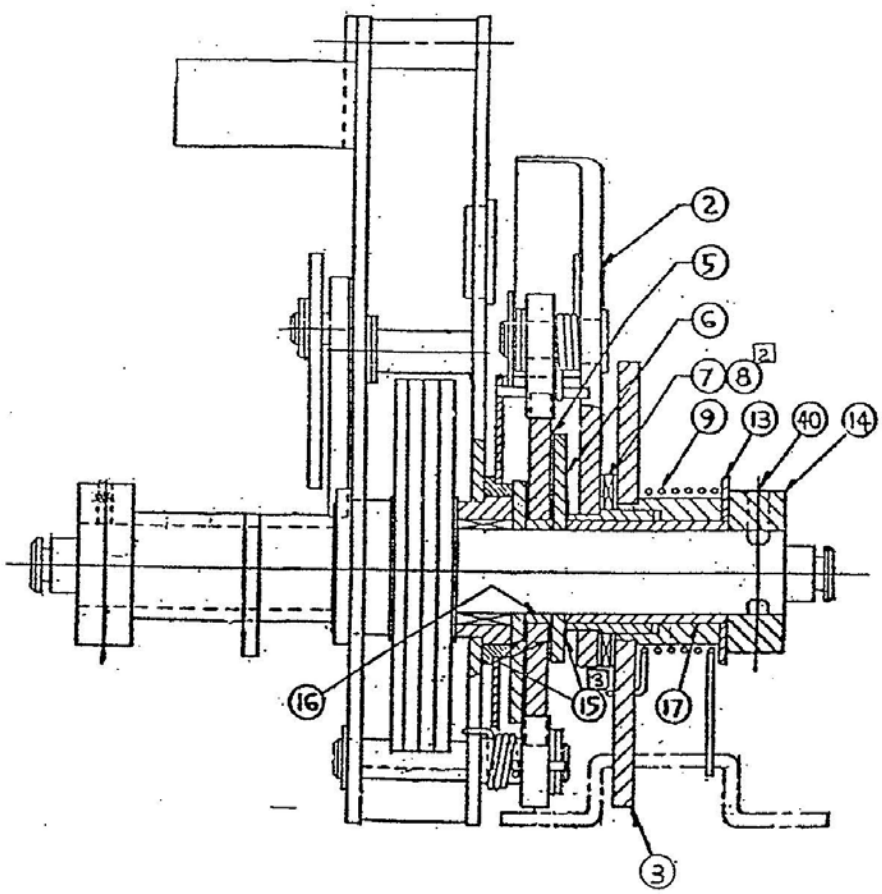

14. Spring crank
13. Wide washer
9. Manual closing reset spring
3. Manual closing lever
8. Thrust washers (2)
7. Thrust bearing
2. Oscillator
15. Precision washers (3)
17. Spacer tube
6. Charging plate
5. Ratchet wheel

Figure 2.

Attachment #1

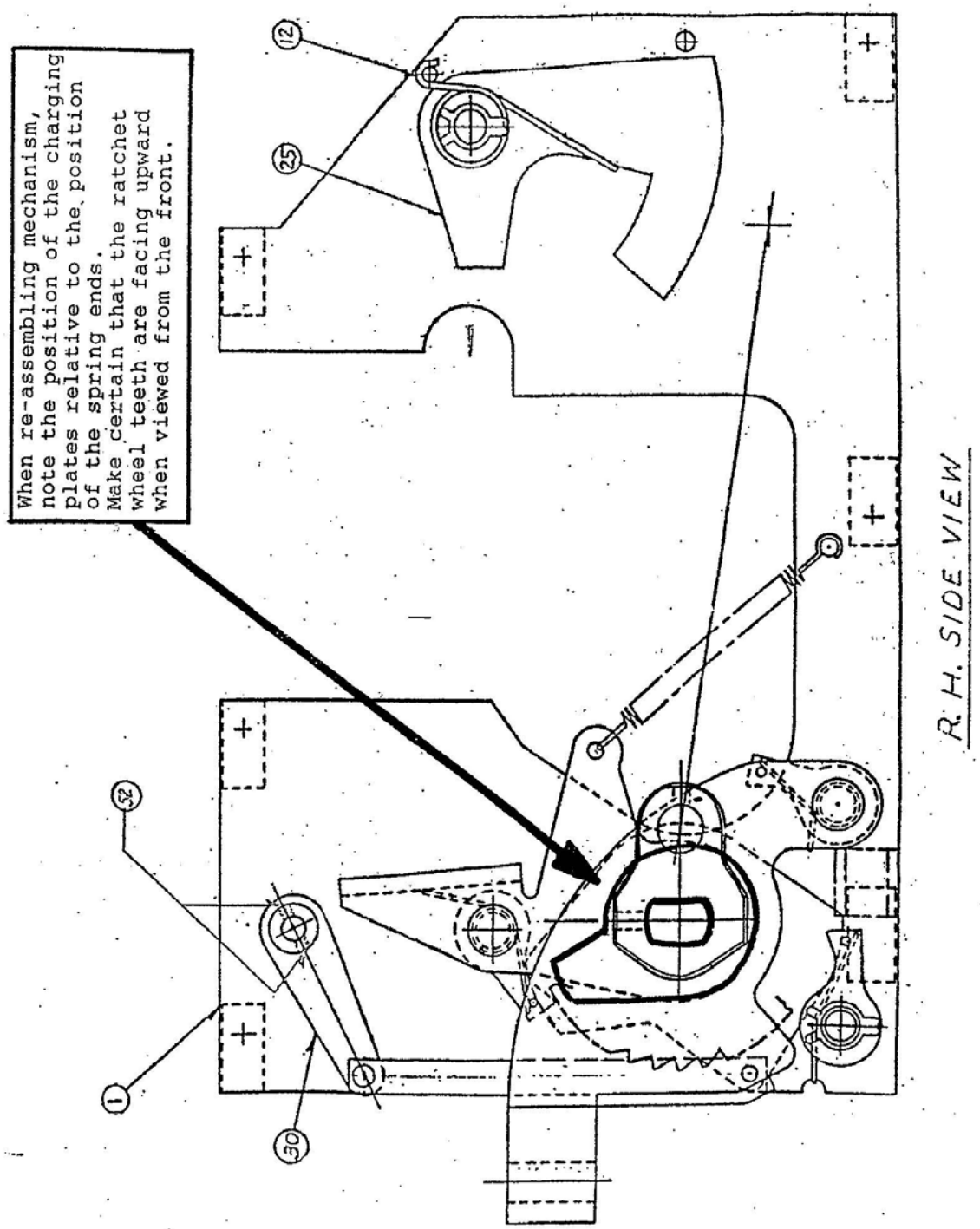

Figure 3.

Attachment #2

te: Jan. 30, 1989

Subject: Technical Service Bulletin No. 890105
CMD Network Protectors

To:

Enclosed is a copy of the Technical Service Bulletin No. 890105. Please review this document with your customer, if they are users of the type CMD network protectors. If auxiliary switch stop retrofit kits are required please enter your "NO CHARGE" order on Y7W.

Sincerely

J.R. Moffat, Jr.

DCBU
Five Parkway Center
Pgh., PA 15220

Attachment #2

TECHNICAL SERVICE BULLETIN NO. 890105

CAUTION: Failure to follow the instructions contained in this technical service bulletin may cause property damage and/or network protector malfunction.

Equipment Affected: CMD Network Protectors

Problem Encountered: The linkage to the auxiliary switch may have been subject to misadjustment during the course of manufacturing for these units manufactured between January, 1987 through August, 1987 or may be misadjusted during maintenance operations, including but not limited to the installation of a replacement relay and control module. The auxiliary switch is located in the relay and control module drawer. See Figure 1, Refer also to Pages 5 & 8 of DB 35-552A. If not adjusted properly, the linkage to the auxiliary switch may rotate beyond the proper stopping point, resulting in an abnormal "over-toggle" condition. Refer to Figure 2.

NOTE: If a fault occurs while the auxiliary switch is in the "over-toggle" position, it is expected that the fuses will interrupt the current. However, the failure to mechanically trip could also damage the saturating transformer assembly, located directly behind the Direct Trip Actuator on the left rear corner of the mechanism module. If the network protector fails to trip mechanically, the saturating transformer should be inspected and if damaged, it should be replaced and the unit retested electrically.

Corrective Action: Two courses of action should be adopted. First, the regular maintenance operations should include checking the adjustment of the auxiliary switch linkage. Instructions for this procedure are included in Figure 3.

Second, Westinghouse has developed a stop bracket which, when installed, will prevent the linkage from rotating past the proper stopping point and thus keep the linkage in the correct operating position. The retrofit kits are available from your local Westinghouse sales representative at no charge. The retrofit kits, Style No. 8310A58G01, will include a bracket and mounting hardware. Installation will require drilling and tapping two holes in the bottom pan of the relay and control module. See Figure 4. Detailed plans and instructions for making the necessary modifications will be included in each kit.

Attachment #2

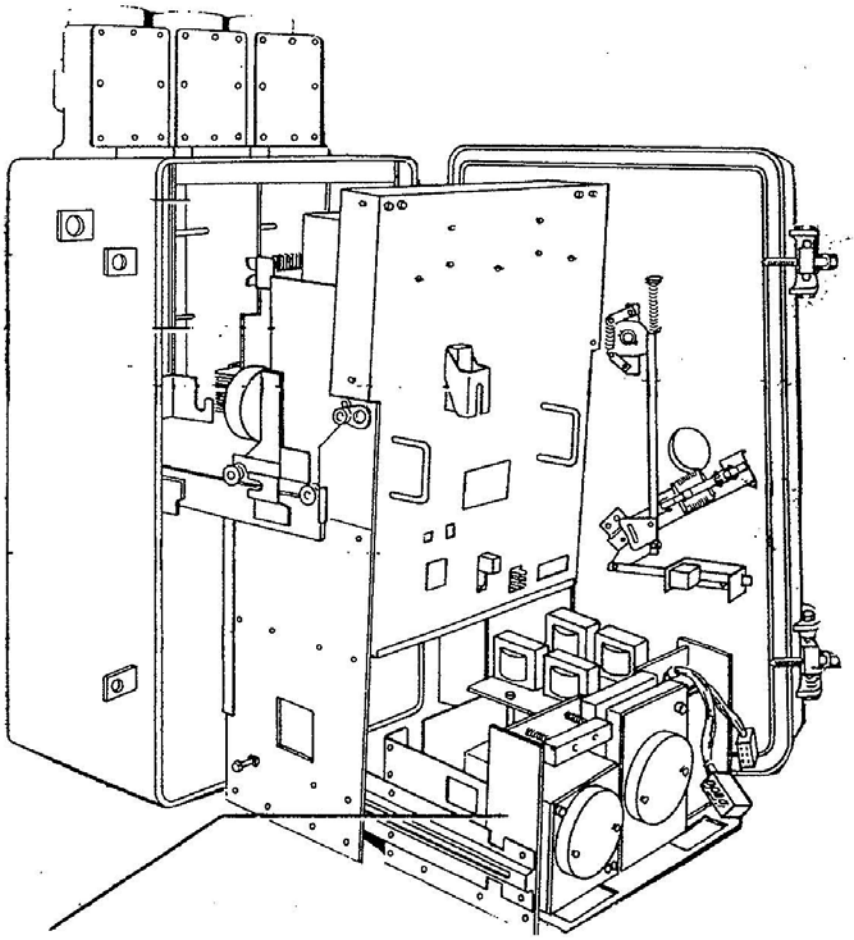

Auxiliary switch is located
in the relay and control
module

Attachment #2

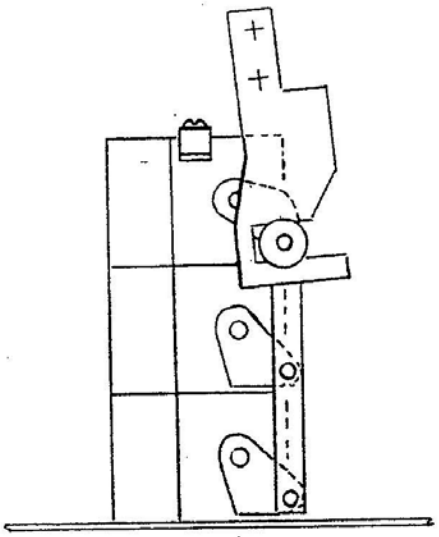

NORMAL "OPEN" POSITION

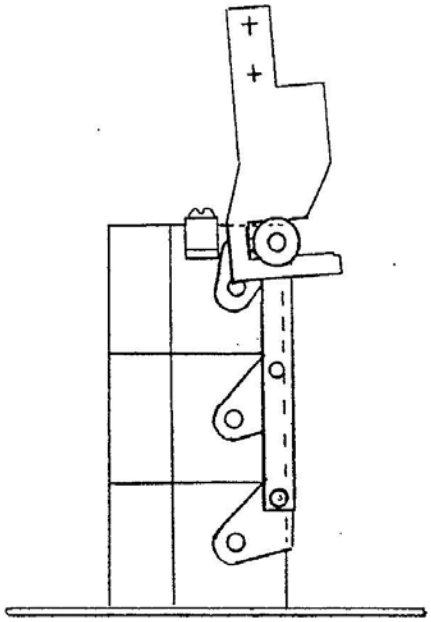

NORMAL "CLOSE" POSITION

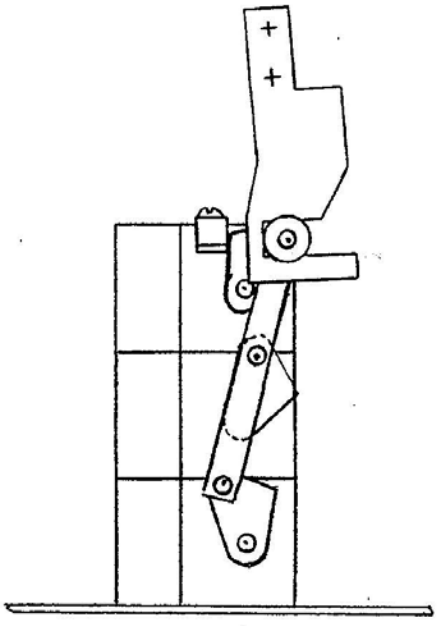

ABNORMAL "OVER-TOGGLE" POSITION

Sketch No. 2

Attachment #2

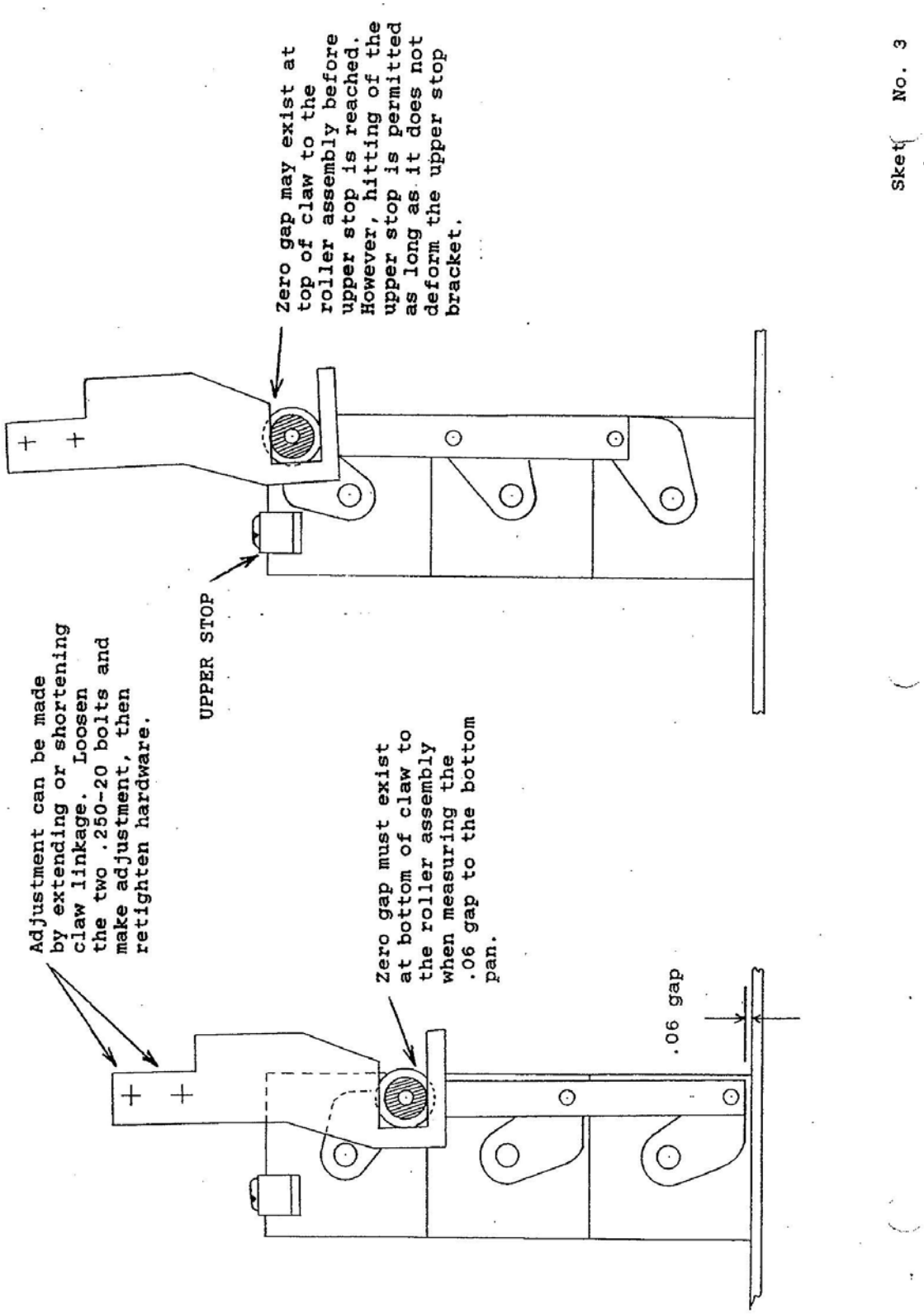

Attachment #2

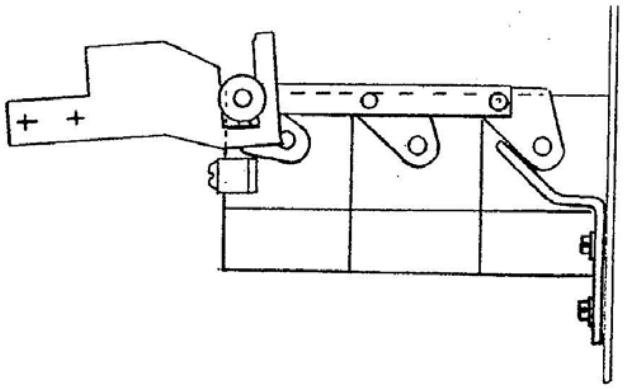

SIDE VIEW SHOWING LOWER AUXILIARY SWITCH STOP BRACKET

Sketch No. 4

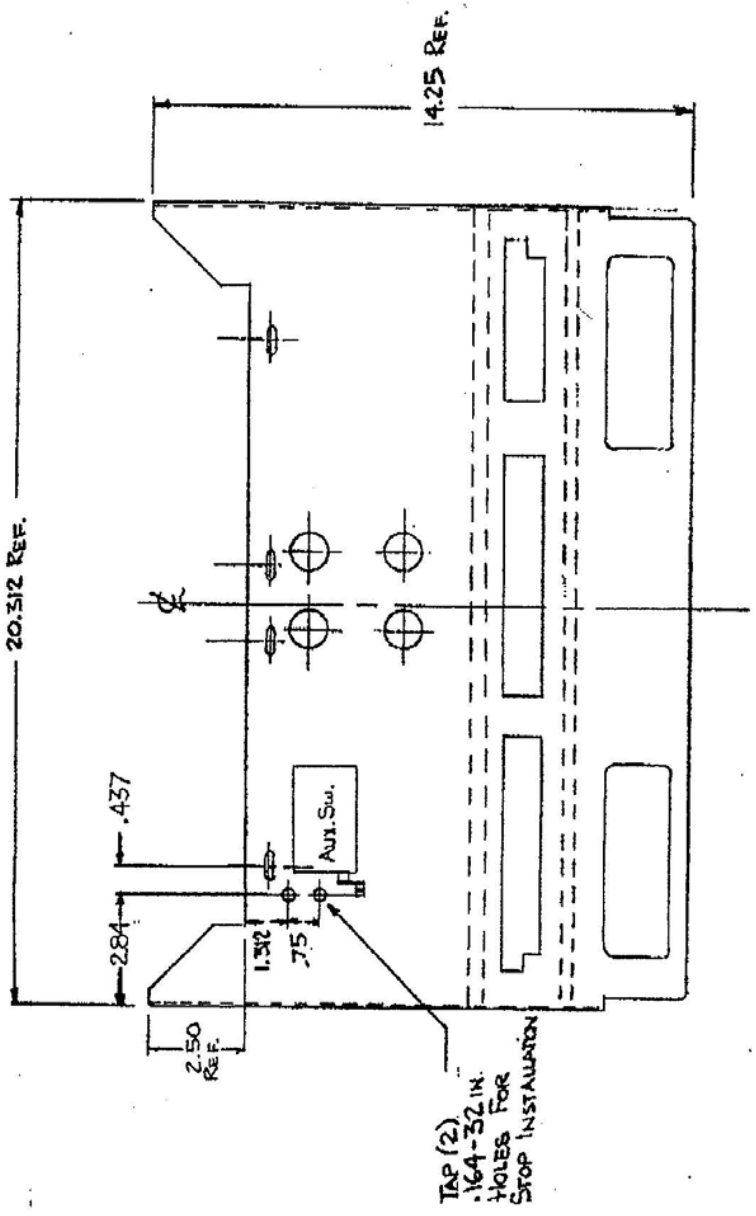

RELAY MODULE BOTTOM PAN DRILLING PATTERN

Attachment #3 – Vendor Manual

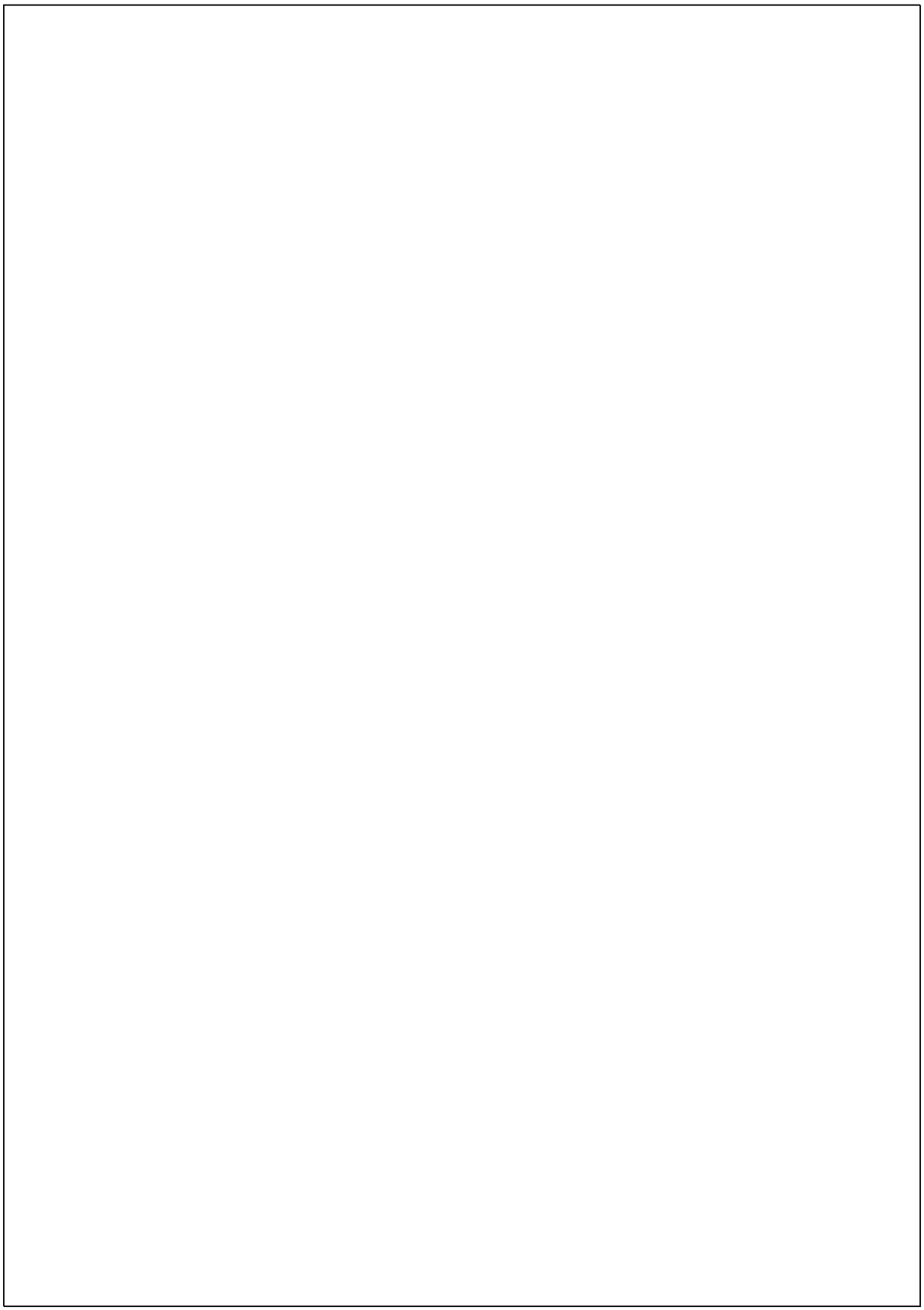

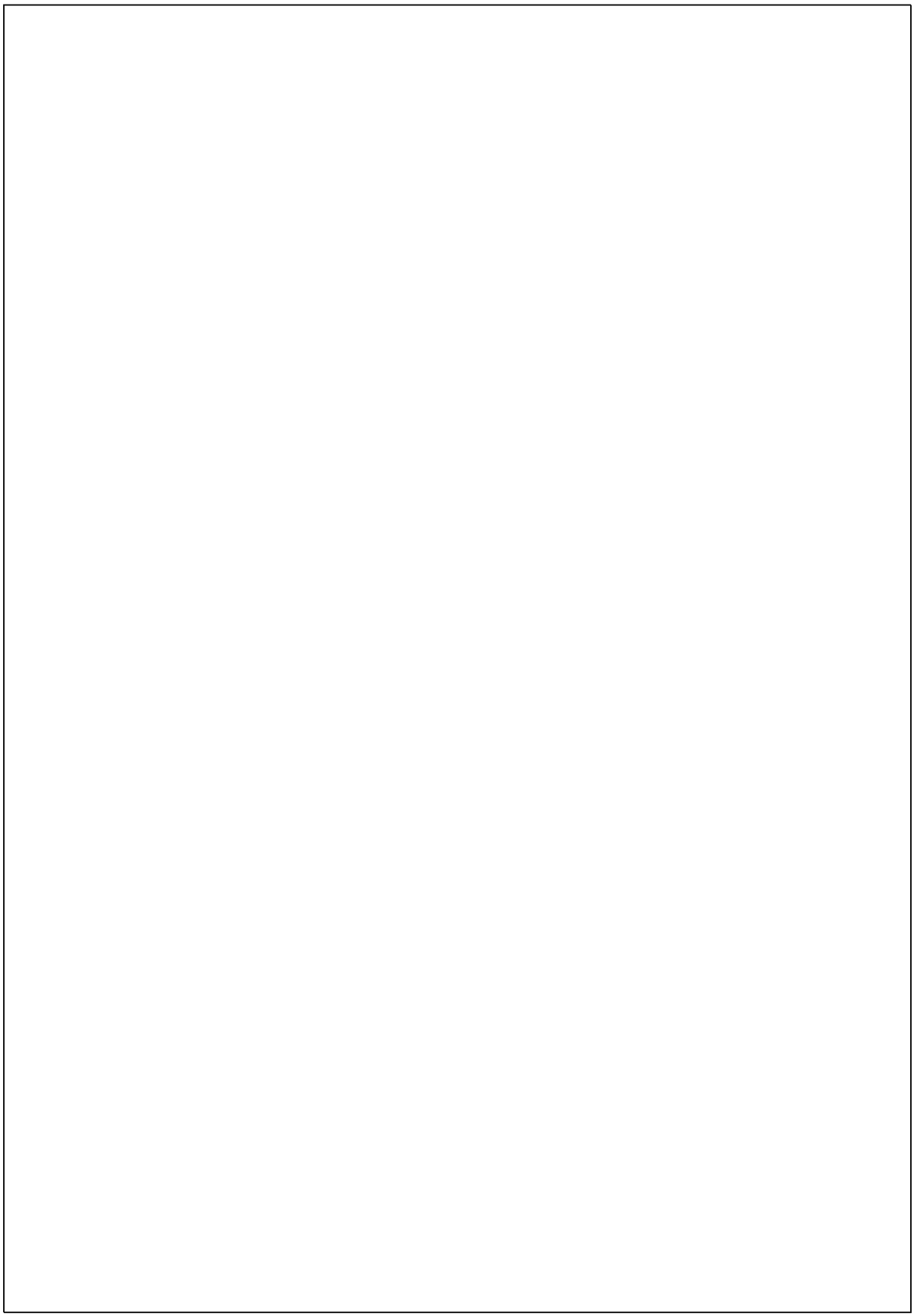

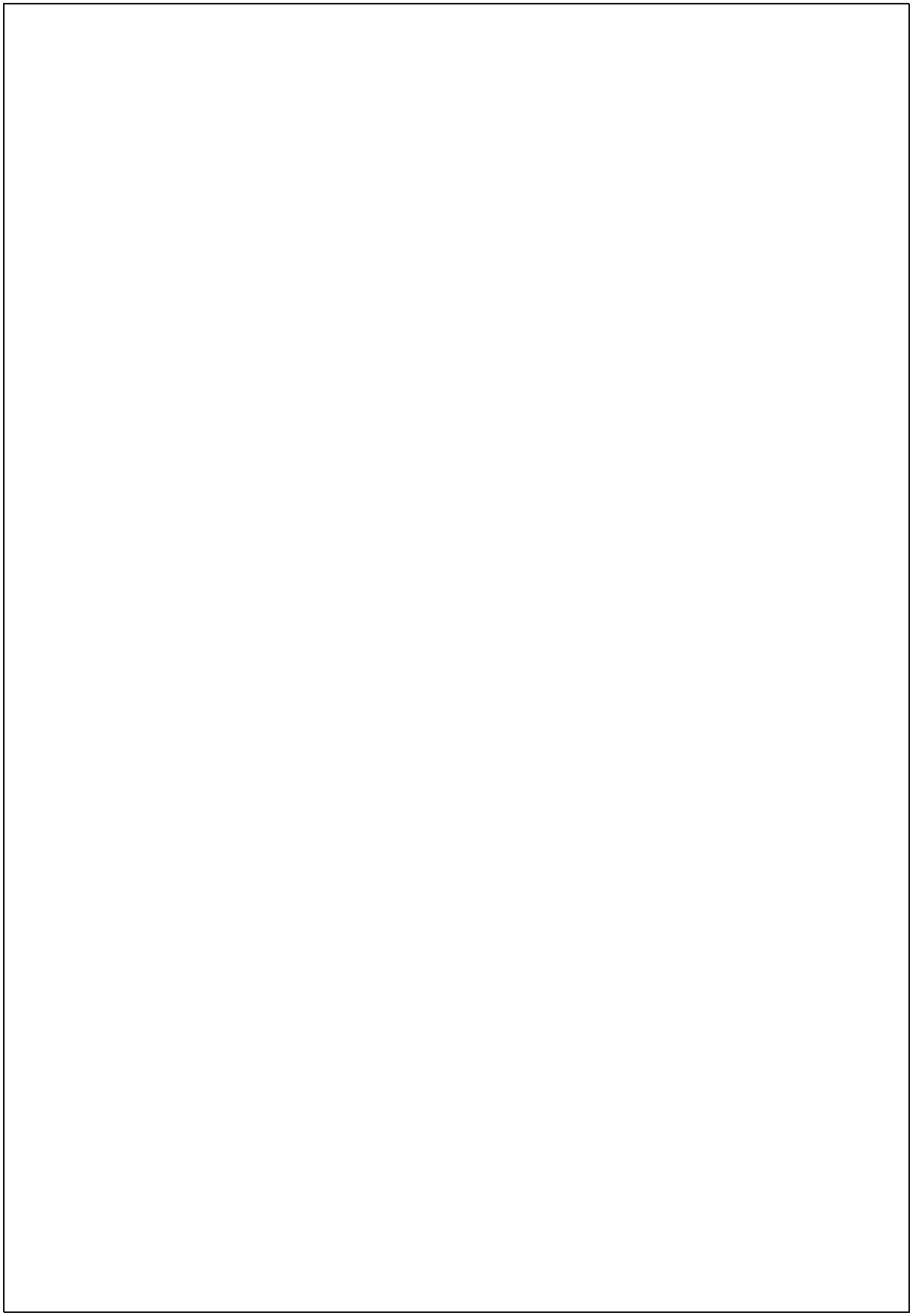

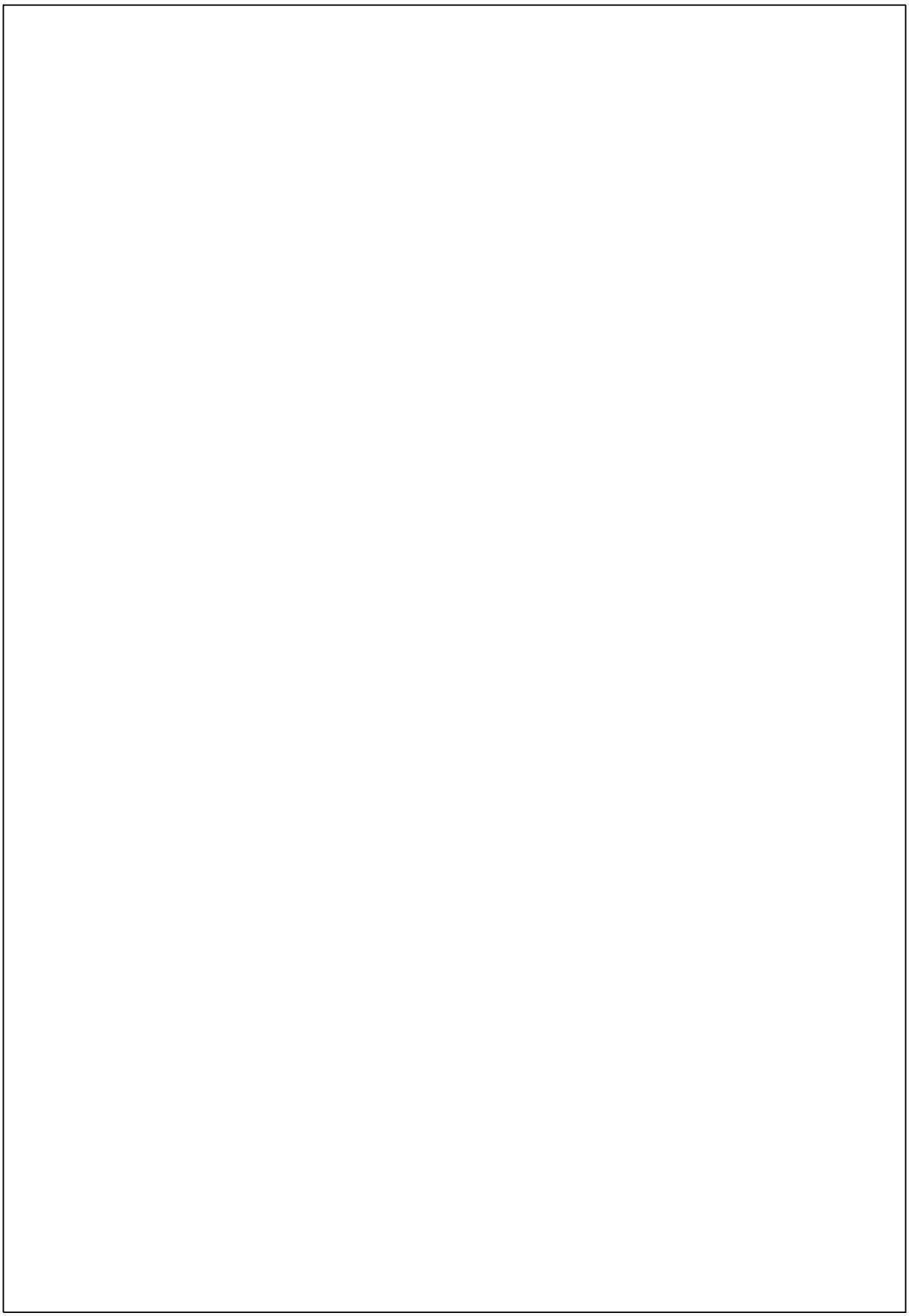

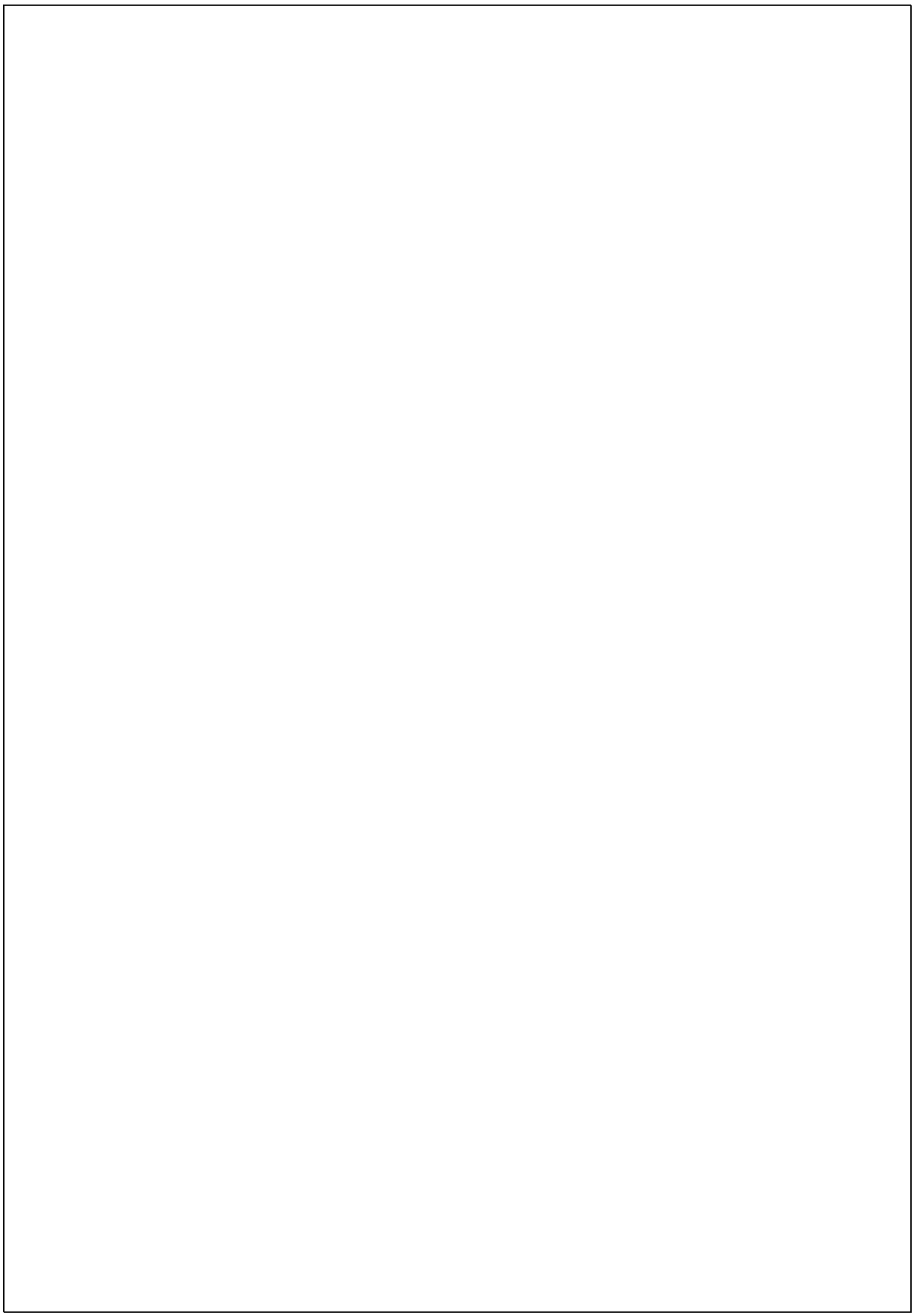

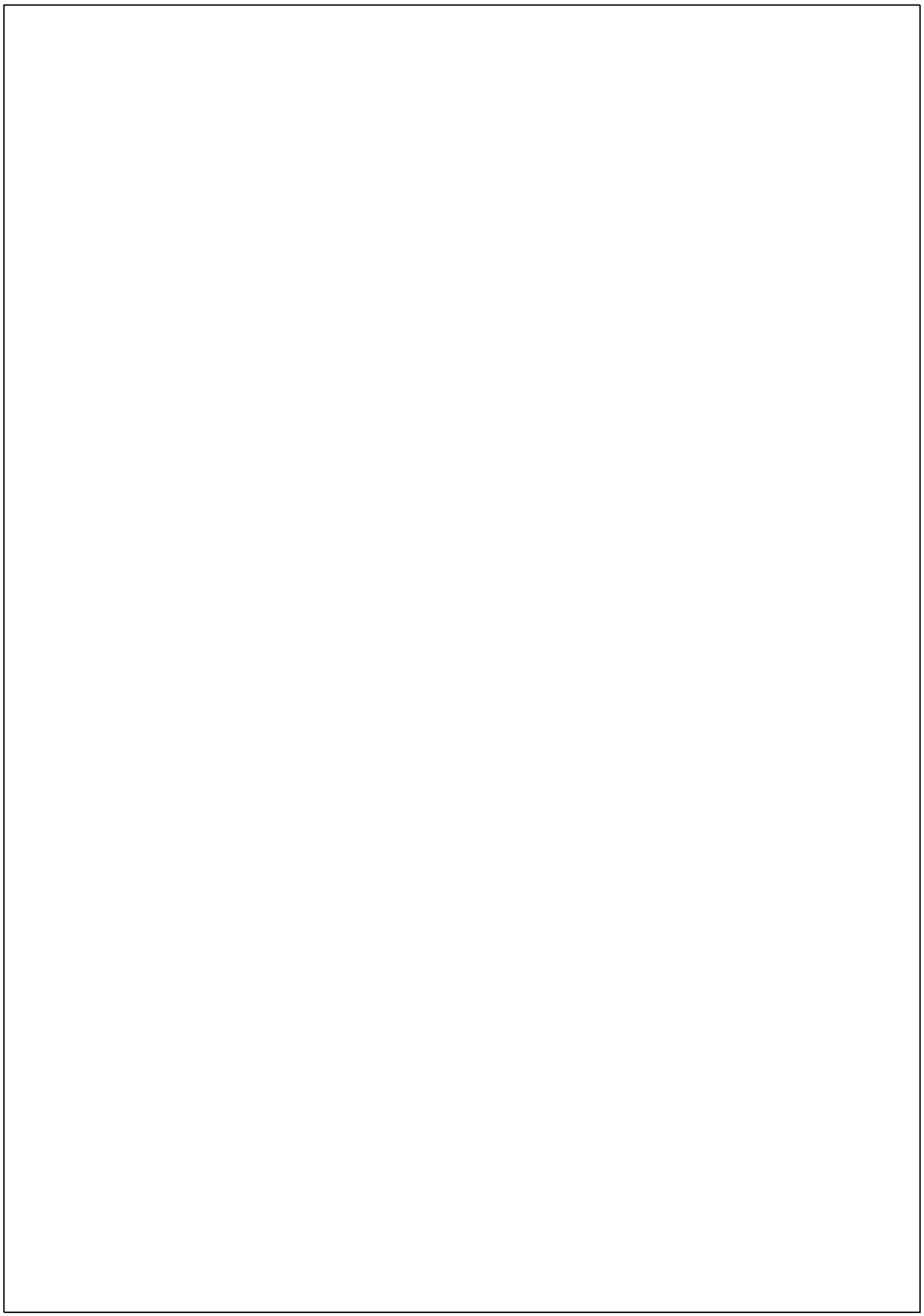

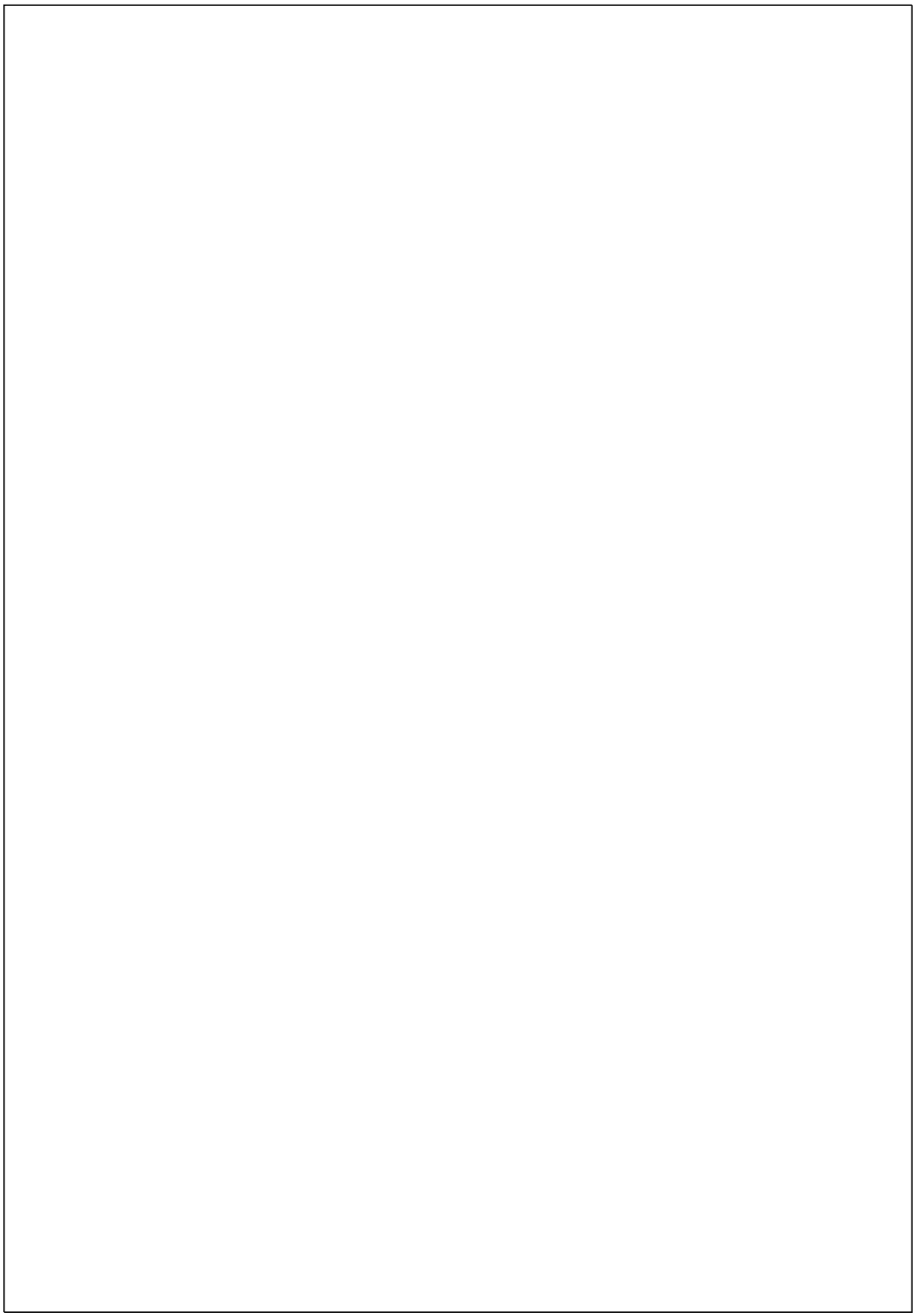

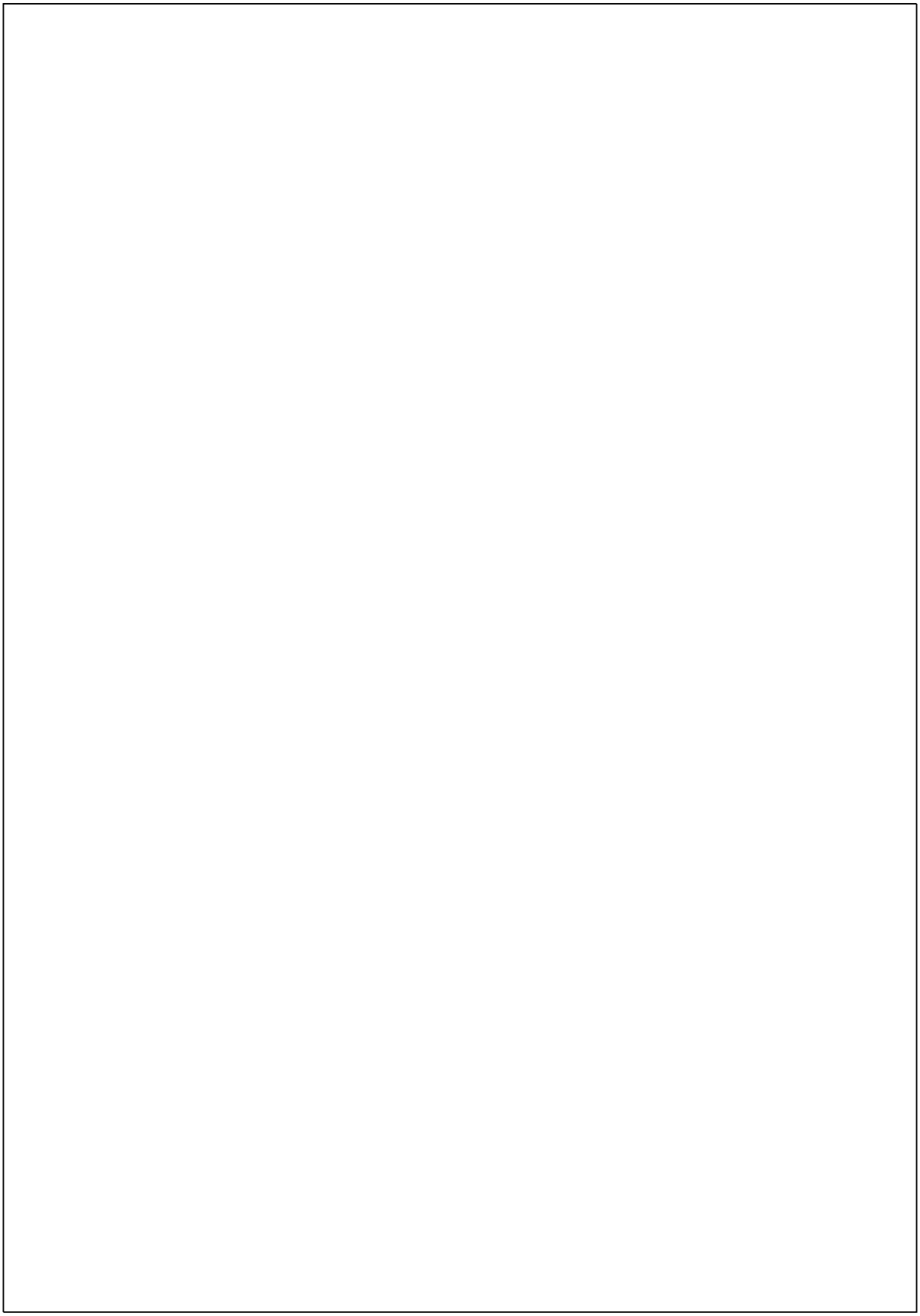



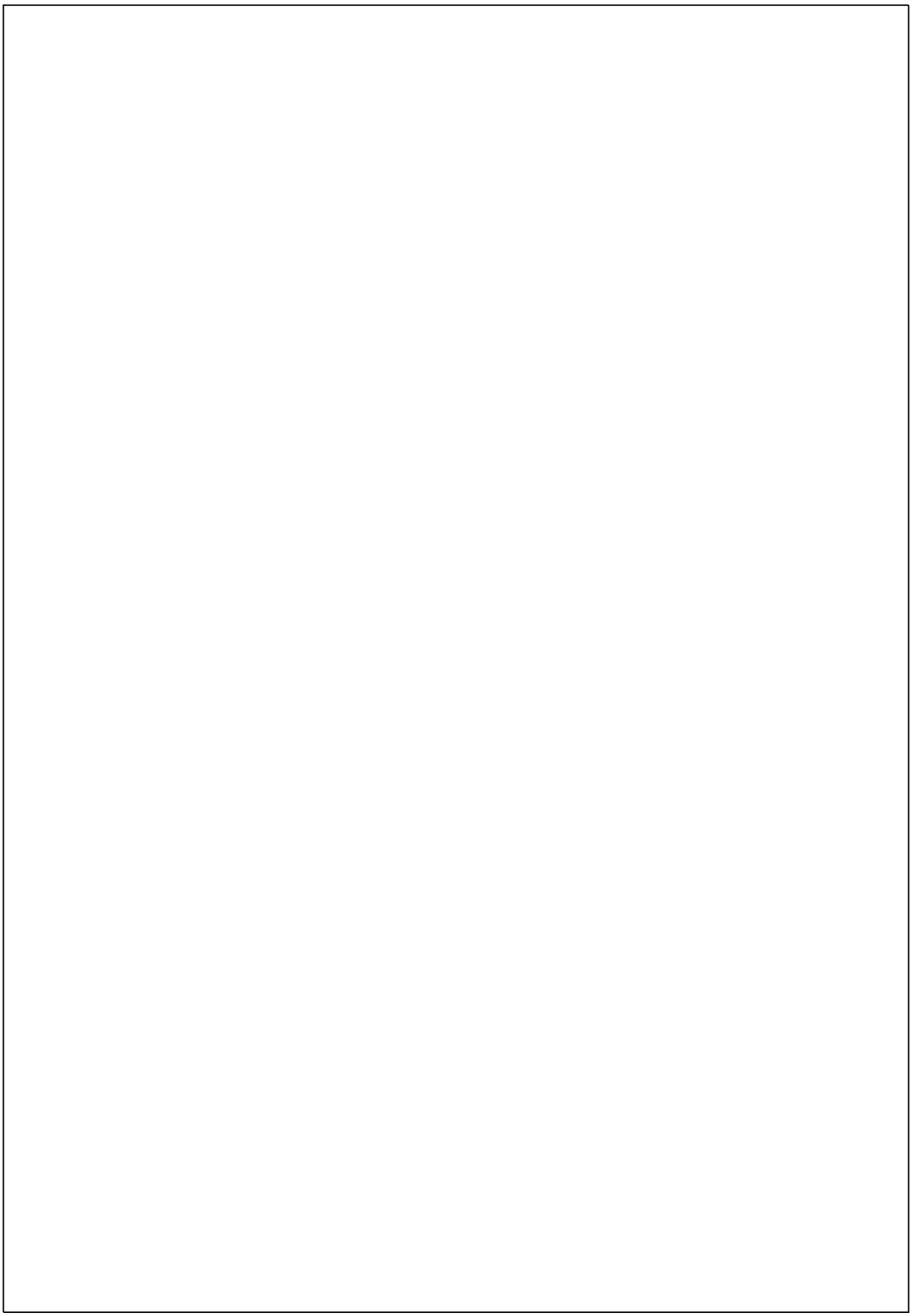

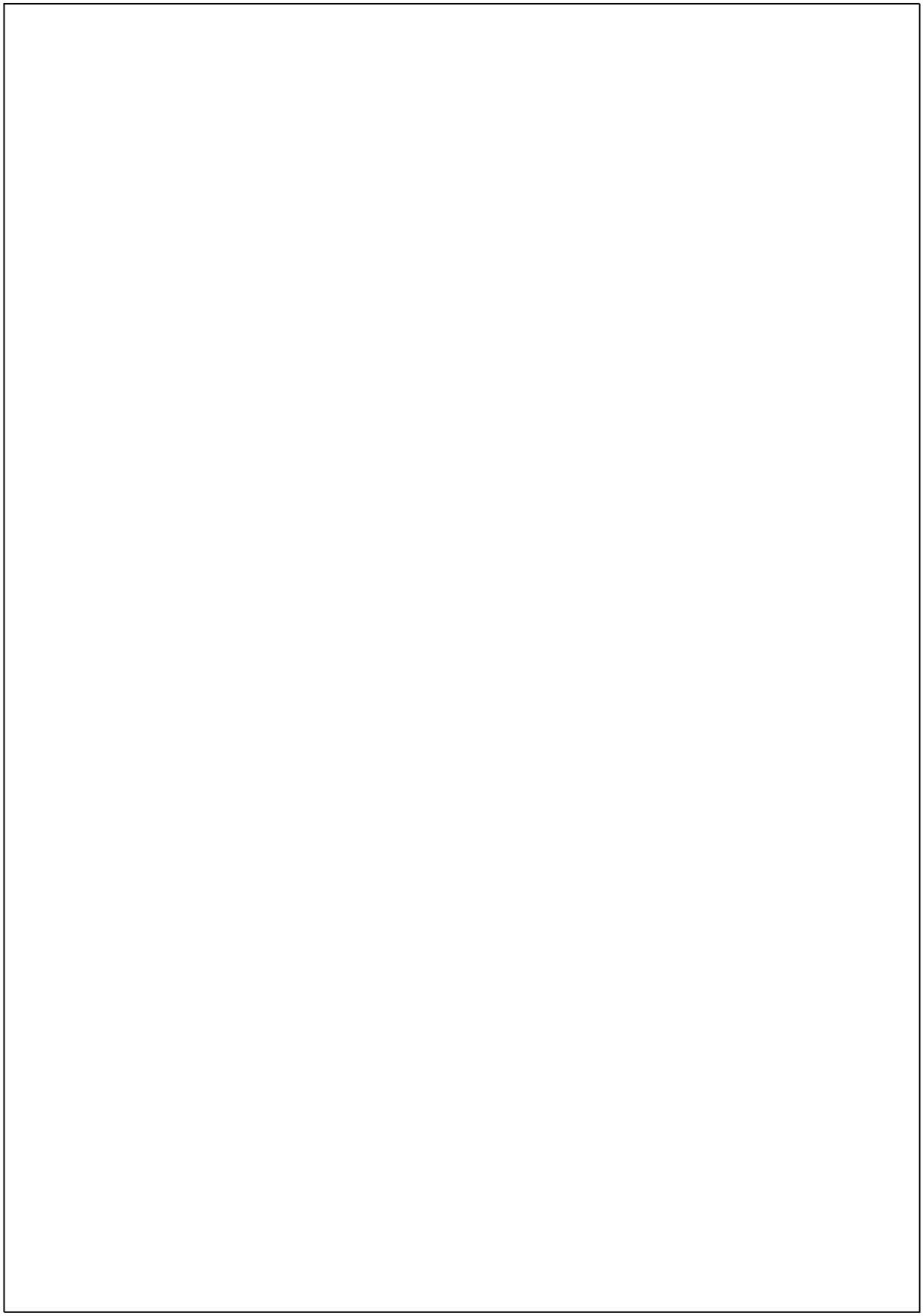

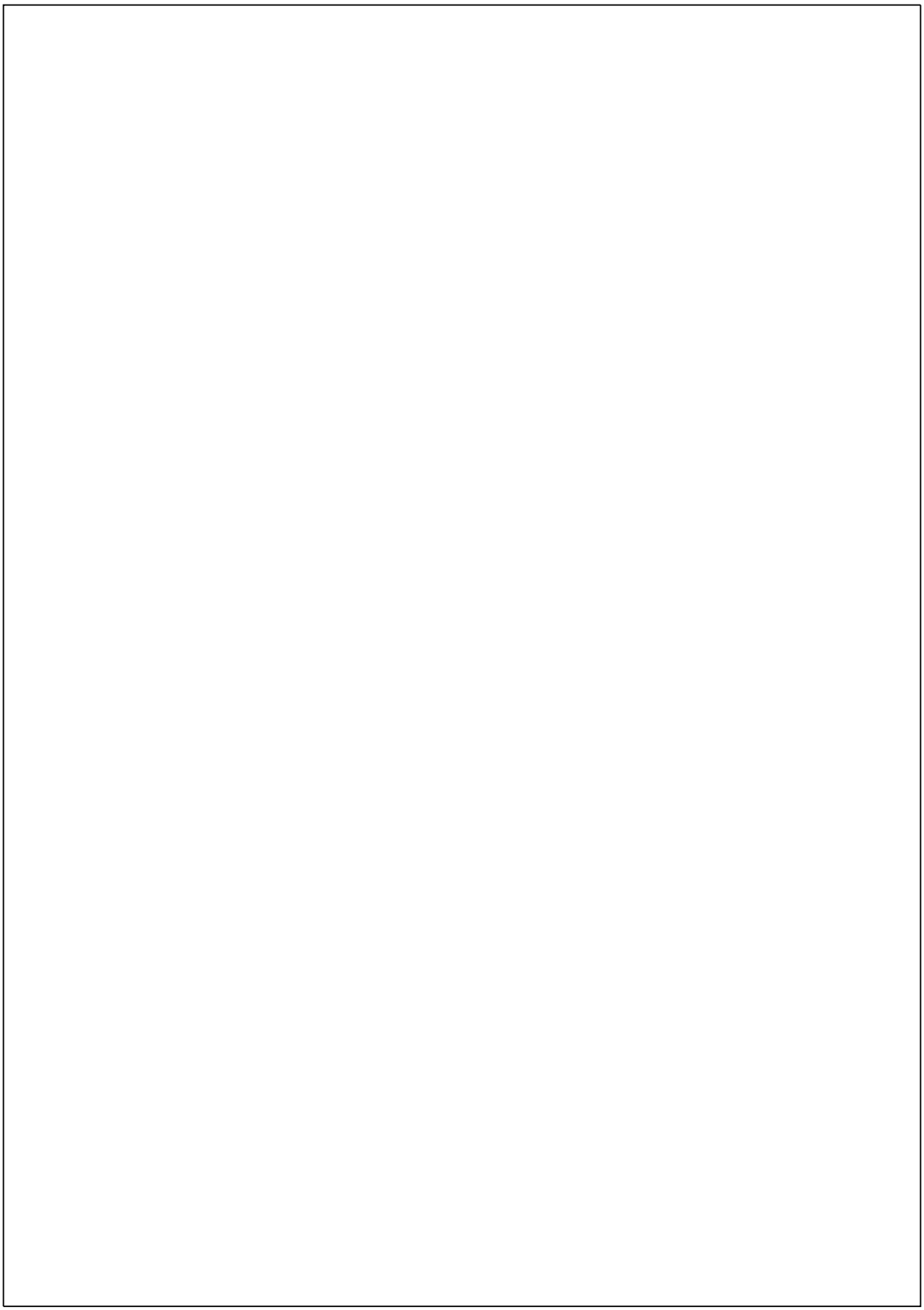

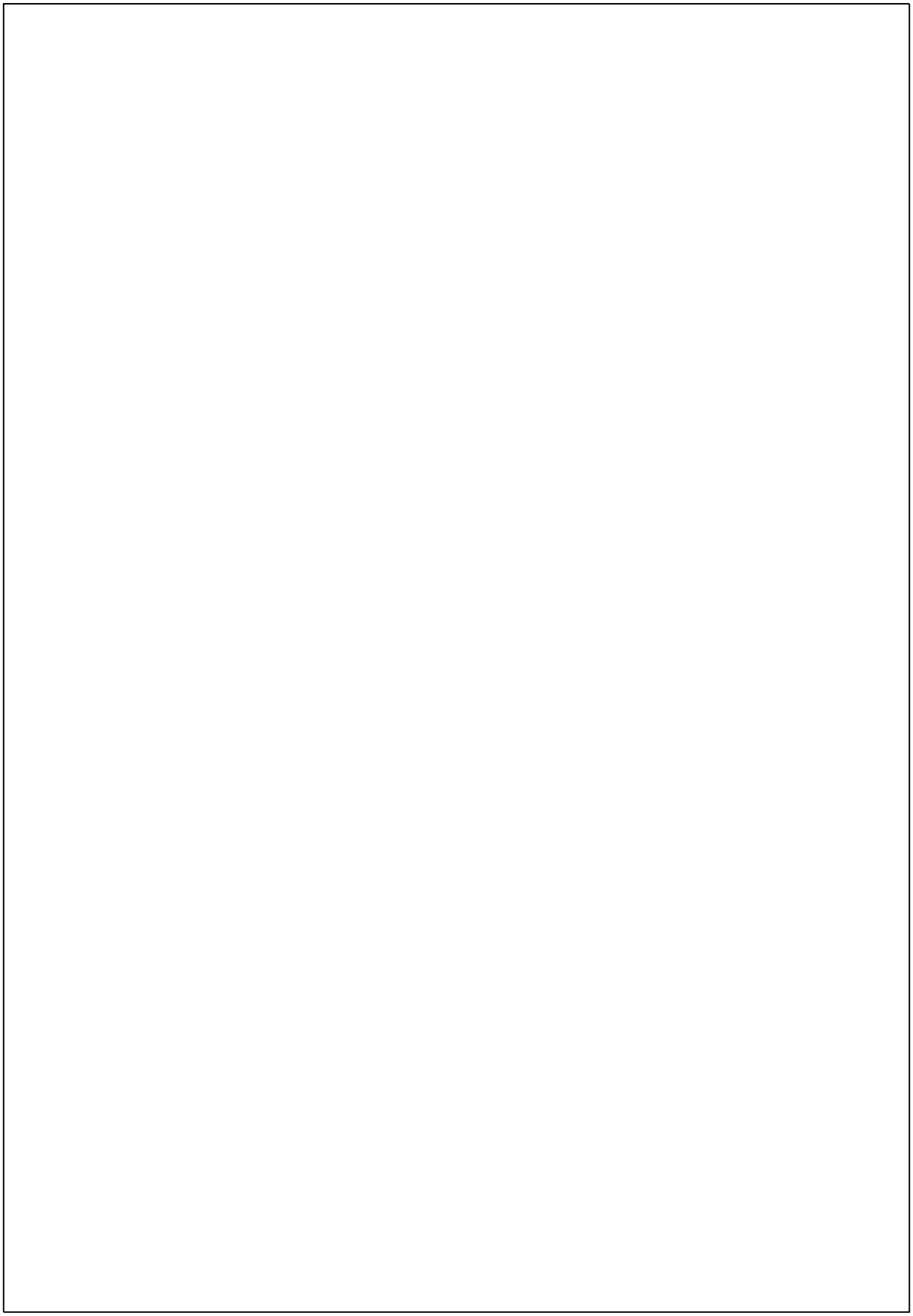

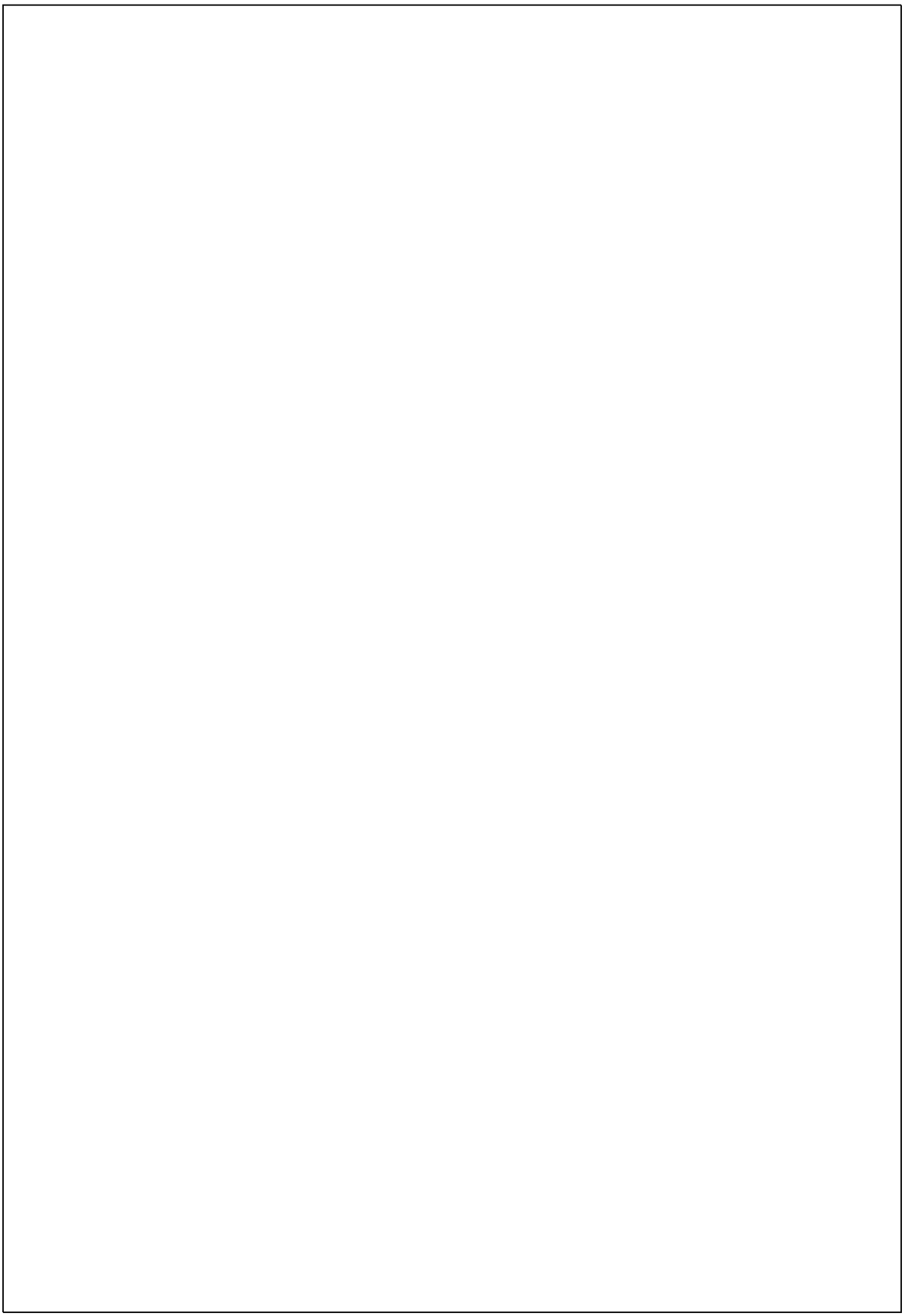

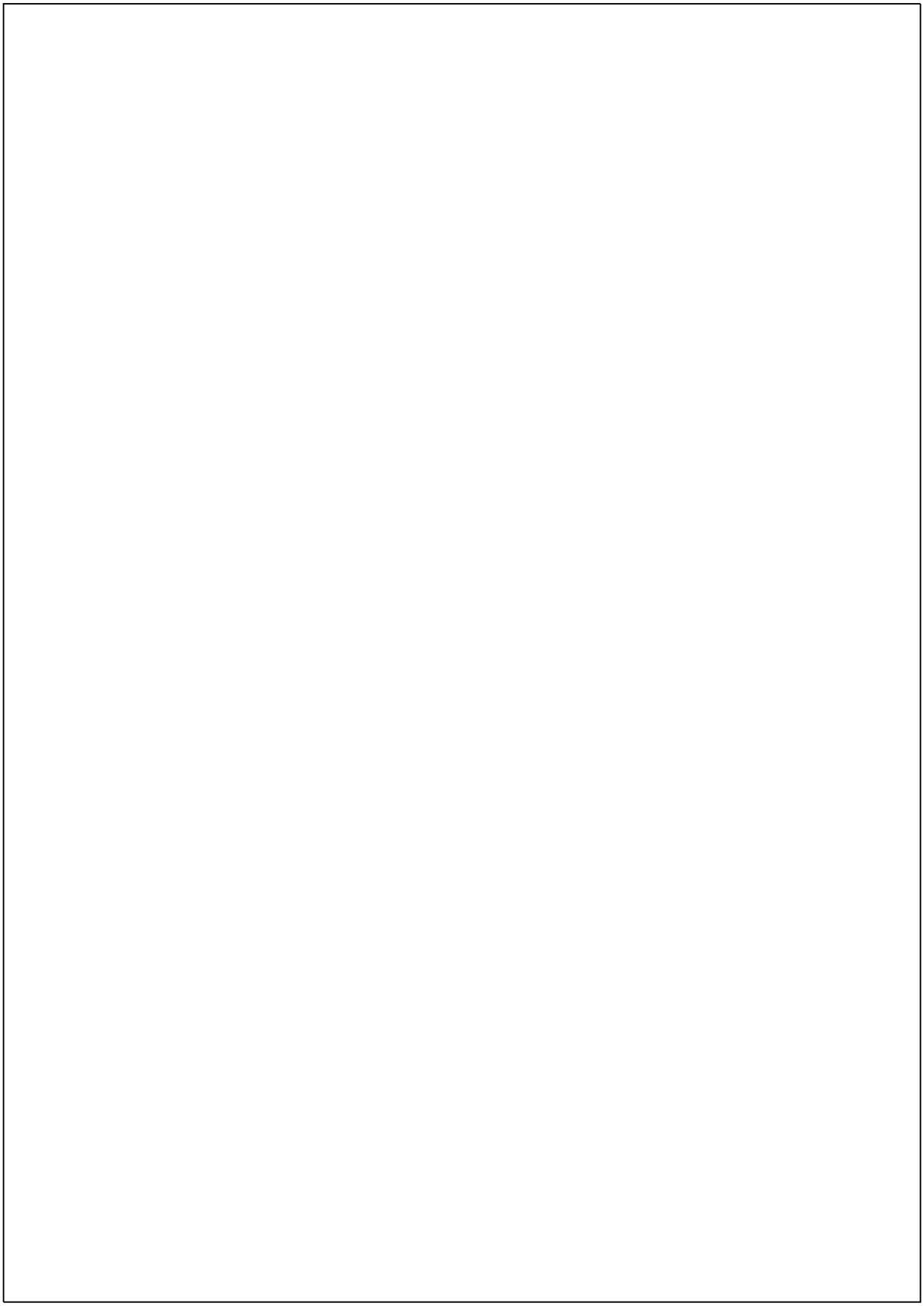

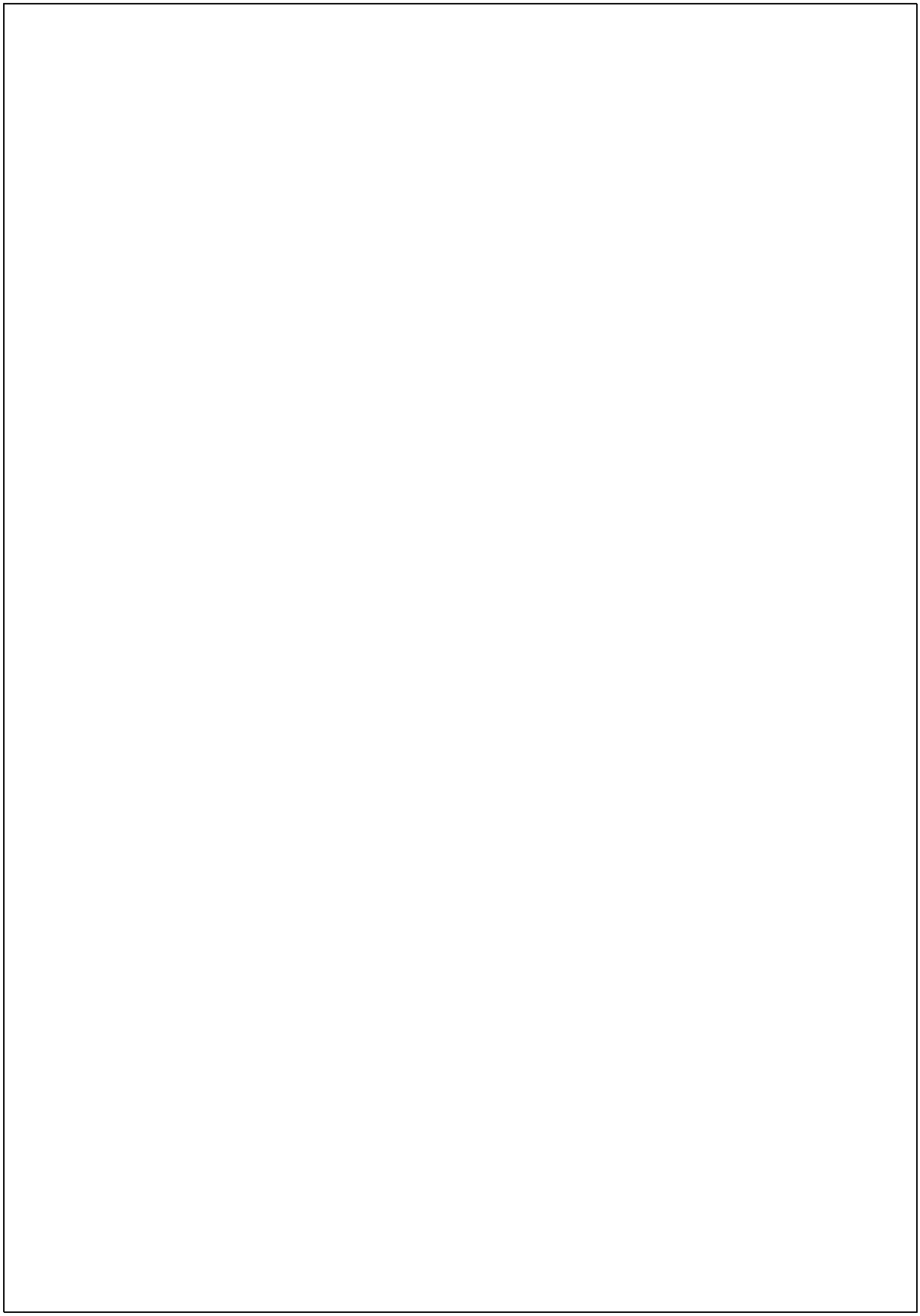

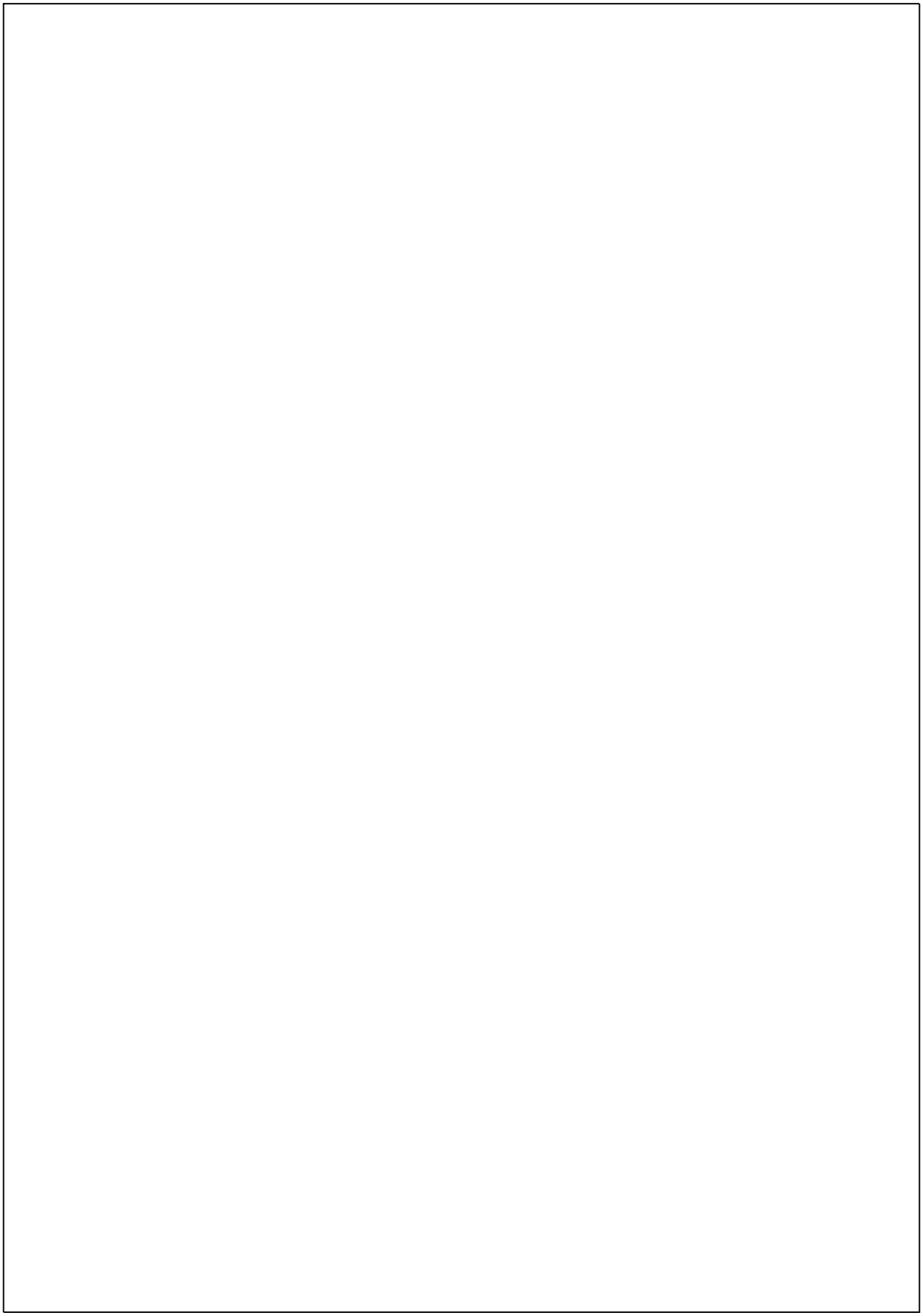

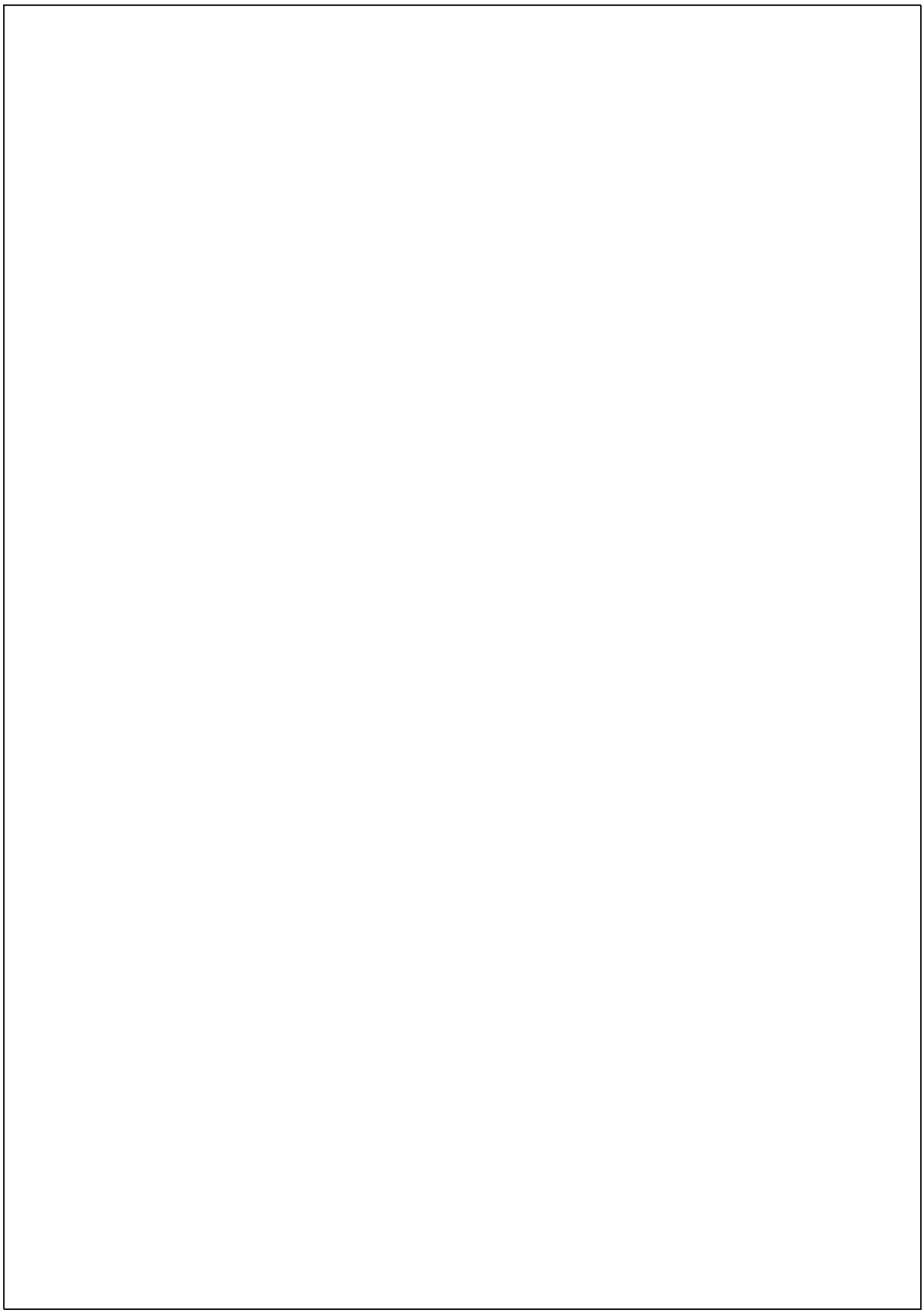

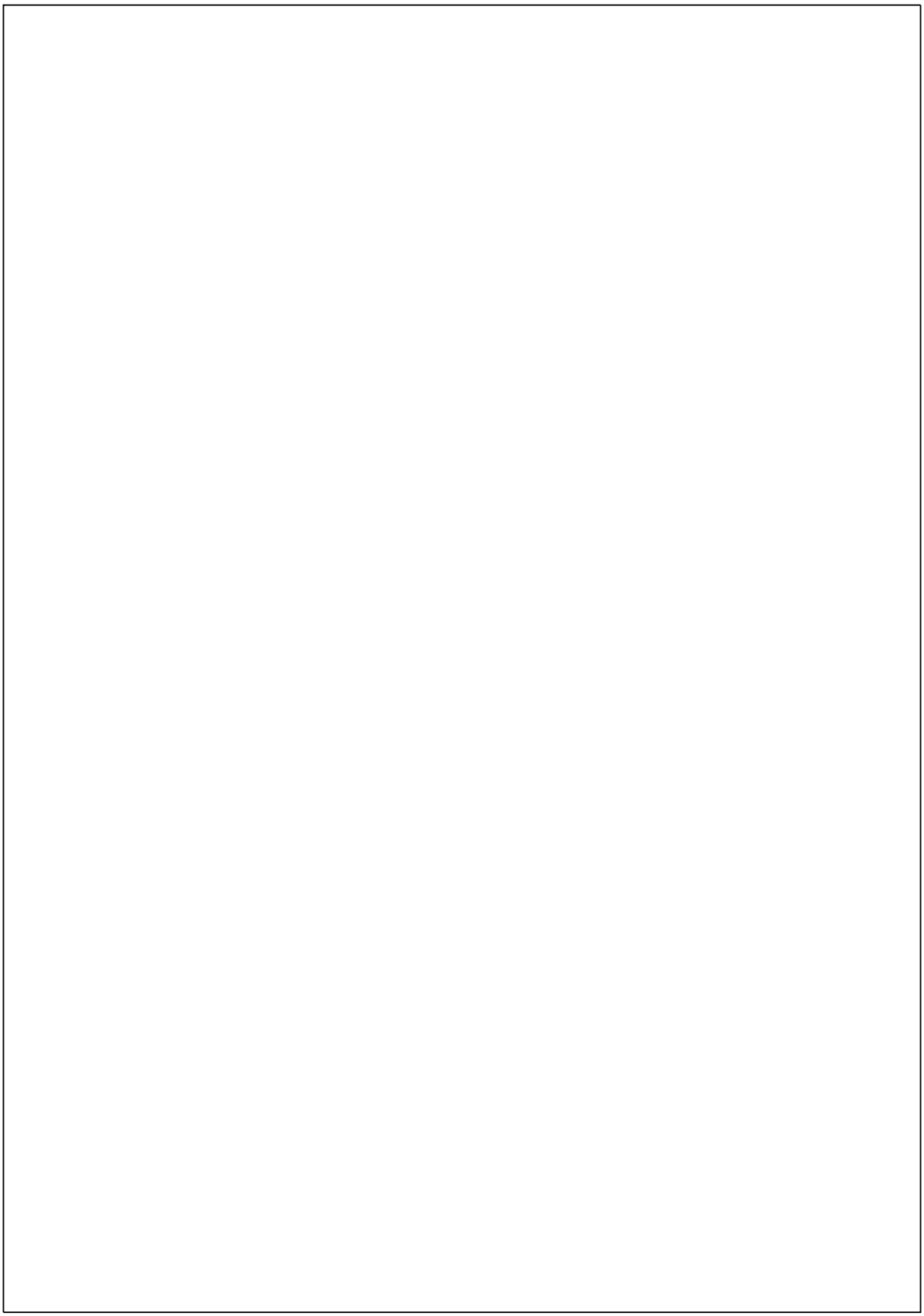

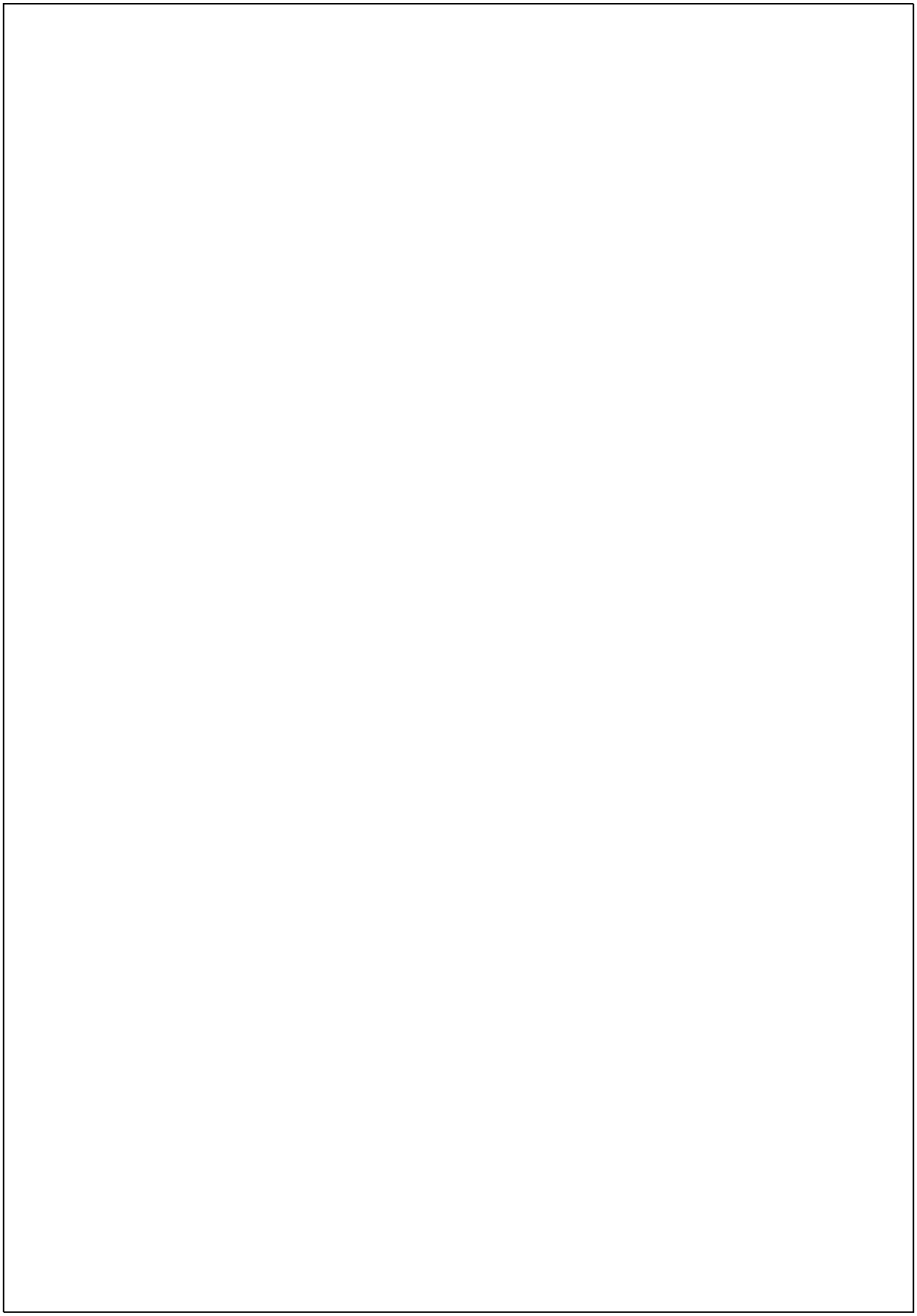

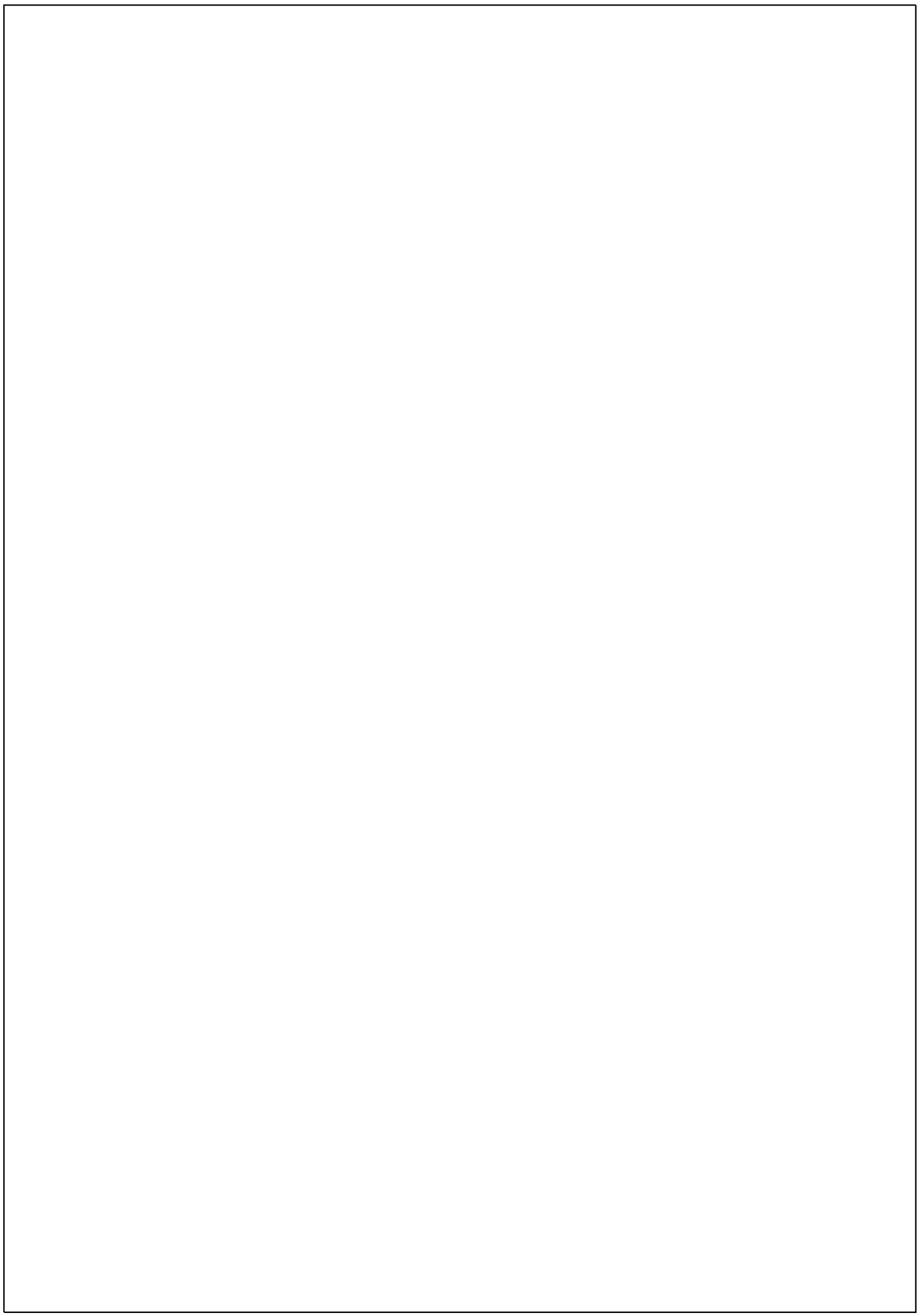

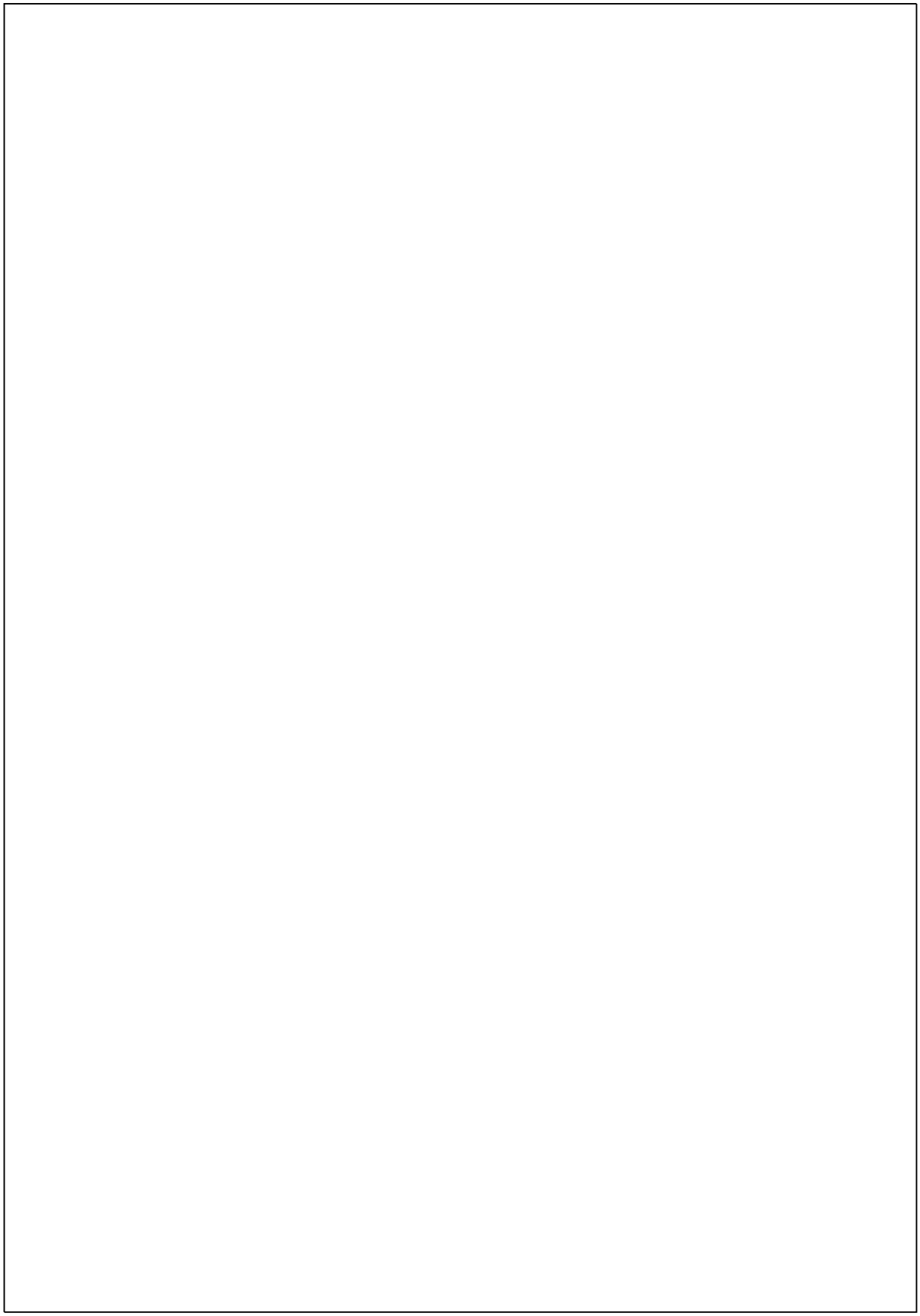







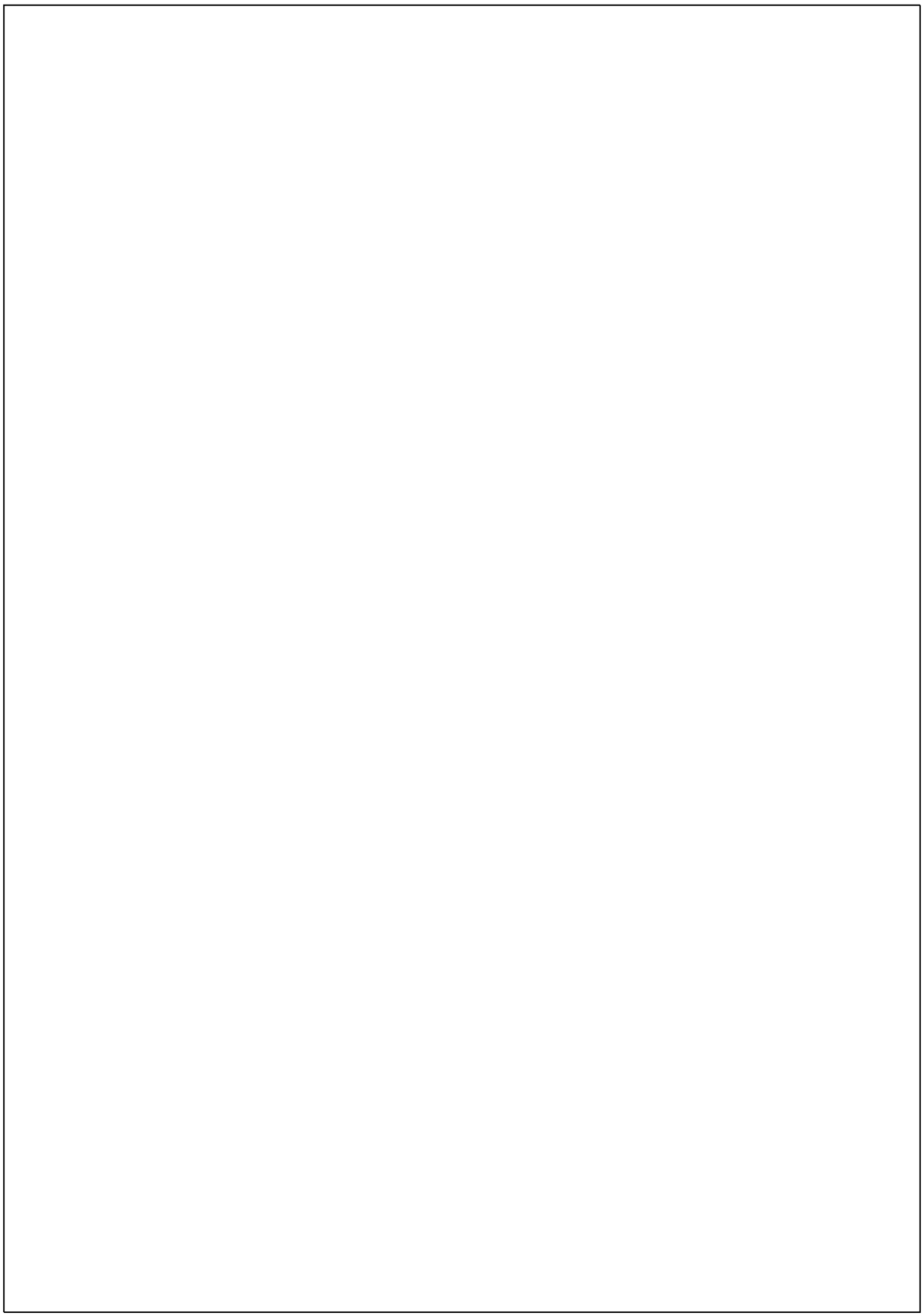



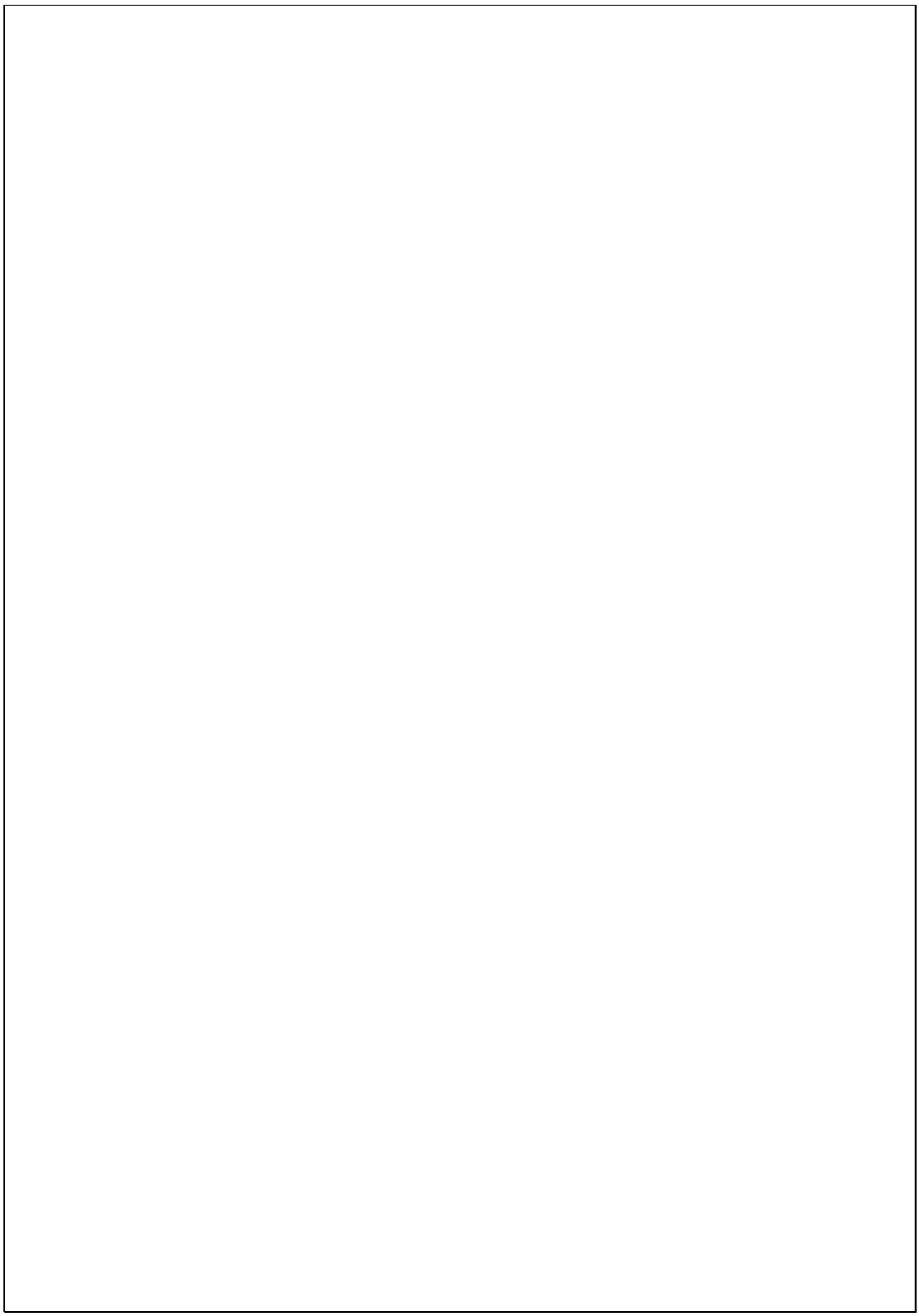

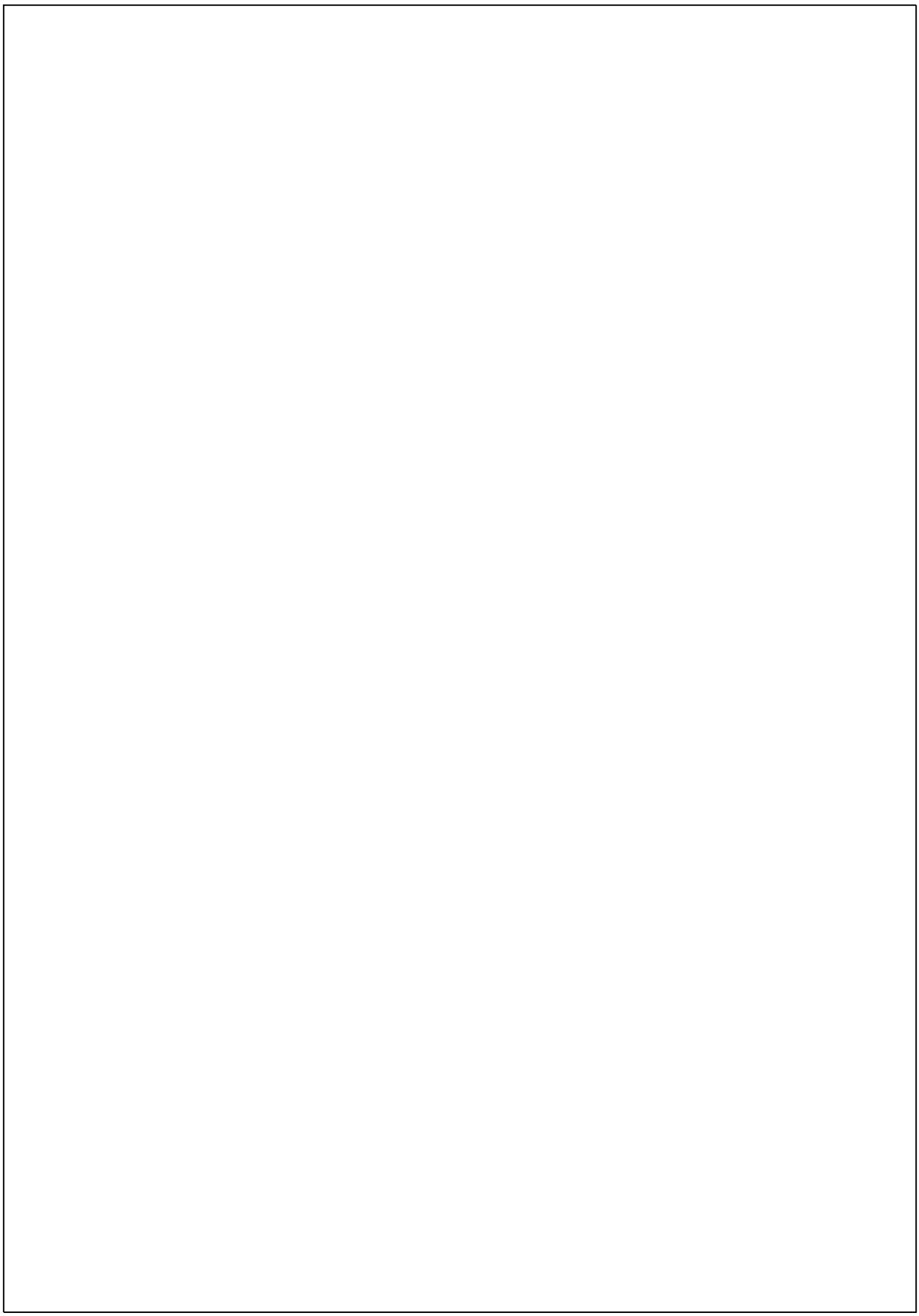

EVERSOURCE MAINTENANCE PROGRAM	Document Number: **6.29C** **Rev. 3** Document Name: **Network Protector MG 8/9 Major Maintenance**
Owner Name:	John Dipaola-Tromba
SME Name:	C. Cory Morgan
Effective Date:	July 1, 2017

Approvals:

Connecticut:

Name: Anthony A. Anzalone Anthony A. Anzalone
Title: Director – Stations Operations
Date Signed: **06-26-2017**

Name: Jennifer A. Schilling _____
Title: Director – Strategy & Performance
Date Signed:

New Hampshire:

Name: James C. Eilenberger James C. Eilenberger
Title: Director – System Engineering
Date Signed: **06-26-2017**

Massachusetts:

Name: Paul R. Renaud Paul R. Renaud
Title: Vice President - Engineering
Date Signed: **06-27-2017**

Ensure you are using the current revision by verifying it against the controlled electronic copy located on the Distribution Engineering Standards Bookshelf or the Regulated Businesses Policies and Procedures Lotus Notes Database.

MG8/9 Network Protectors – Major Maintenance

CAUTION

No modifications to network protectors shall be made, either temporary or permanent, without prior approval of the Distribution Engineering Department.

Stop the job, place equipment in a safe condition, and contact Supervision if the process does not proceed as expected, if unusual situations occur during the performance of the process, or any significant problems occur during maintenance activities.

Before You Begin

Prior to assigning work on network protectors:

1. The Supervision shall, prior to assigning personnel to perform “Work” on a network protector, ENSURE the person(s) responsible for performing the “Work” is fully qualified in accordance with operating company requirements
2. The Supervision shall, ensure that all employees are properly trained and qualified to perform this work, and that all appropriate PPE and safety requirements are met, including but not limited to those defined within the following documents:
   - TD 211, “When to Wear FR Clothing”
   - TD 952, “Protection of Personnel Entering Enclosed Spaces” (Connecticut and Western Massachusetts only)
   - TD 955, “Confined Space Requirements”
   - Eversource Employee Safety Manual
   - TD -877 Managing Arch Flash Hazards on CL&P Distribution Facilities (Connecticut ONLY)
3. The Supervision shall, ensure those performing the work are aware that of the following PPE requirements whenever working in Underground Vaults & Manholes:
   - Safety Glasses with side shields
   - EH (Electrical Hazard) rated boots
   - High Voltage gloves
   - FR (flame resistant) clothing, as specified in TD 211
4. Whenever “Work” is performed on a network unit as defined in paragraph 5 of this procedure, the following PPE is required :
   - Protective Arc Flash Hood (Beehive), (Stock Code 507687) or company approved equivalent.
   - Safety glasses with side shields
   - Minimum of low voltage (Class 0) rubber gloves (use of High Voltage Rubber Gloves is preferred)
   - Double layer of full body FR Clothing (i.e., FR shirt and pants plus full body FR coverall)

5. All persons performing “Work” on Network Units as defined below and those persons within the immediate work zone while “Work” is being performed shall wear at minimum double layer full body FR clothing, minimum 25 cal. FR rated hood (beehive type with built-in arc rated face shield), safety glasses and, minimum of low voltage (Class 0) rubber gloves (high voltage rubber gloves preferred). As defined in this document, “Work” includes the following tasks:

   - Installing or removing transformer links and network fuses
   - Rolling or racking out the protector
   - Phasing the unit
   - Connecting test leads to an energized bus
   - Obtaining transformer and network voltages
   - Test probe usage prior to installing links and network fuses
   - Or any other work performed inside the network protector enclosure with the transformer and/or network bus energized

6. Prior to accessing manholes and vaults to investigate, inspect or work on a network unit in a single transformer vault, the maintenance records for that unit will be reviewed for condition of the unit.

   - If the records indicate that a major maintenance was completed within the maintenance cycle per the Eversource Maintenance Program and the unit has no major deficiencies, work may commence on the network transformer with the unit energized following all applicable company procedures and the protocols. (Applicable only to Connecticut and Western Massachusetts)
   - If the records do not indicate that a major maintenance was completed on the unit within the maintenance cycle per the Eversource Maintenance Program or major deficiencies have not been addressed, then the primary feed to the unit will be de-energized prior to commencement of maintenance work. The maintenance work on the unit will then take place with the unit de-energized, and only the secondary cables will be energized back from the street grid during the work. This will only apply to single transformer vault units.
   - The deficiencies described below, require the primary circuit to be de-energized in accordance with the operating policy.
     - Major maintenance not performed within the maintenance cycle required by the Eversource Maintenance Program.
     - Low oil level (below sight glass / gauge level) in primary switch or transformer or dielectric quality of oil below acceptable level.
     - Any other significant defect or abnormal condition that may affect the safe operation of the network protector or transformer, such as, free standing water in the primary switching or transformer oil sample, excessive damage / corrosion in the network protector or other defect that requires immediate repair to return to service.

7. For cases where multiple network transformers exist in a vault, it will generally not be possible to de-energize all of those units for a variety of reasons. Therefore, prior to working on a network transformer, where multiple network transformers exist in a vault, maintenance records shall be reviewed for major deficiencies and/or major maintenance completion within the maintenance cycle per the Eversource Maintenance Program prior to working in the vault.
   - If records indicate that major maintenance for all transformers within the vault is up-to-date, and that there are no major deficiencies, then work may proceed.
   - If major deficiencies or major maintenance was not completed, management will jointly work with employees for the appropriate steps to follow.
8. With the exception of the commissioning of a new network unit, 480V/277V network units shall have major maintenance completed with the primary de-energized. 216V/125V network units may be worked on with the primary energized as long as no oil work (i.e. oil sampling, topping off and/or retro-filling) is being performed.
   - Network major maintenance that includes any oil work (i.e. primary equipment oil sampling, topping off or the like) shall only be completed with the primary equipment de-energized
9. Job Setup: Work zones, requirements for various jobs, switching requirements. All arrangements should be completed or setup prior to beginning the job. These include cones, signage, and police or traffic control. Check holes prior to entry for cleaning needs, i.e. pumping water, debris, contaminates, visible oil, and providing samples for lab analysis.
10. Review the manufacturer's manuals for all safety notations (Danger, Warnings, and Cautions), as needed. These may be in sections of the manual other than with the instructions.
11. Supervision shall ensure the assigned workers have primer, paint, and any additional material needed for cleaning and preservation of the exterior of the network protector prior to departing the work center.
12. Prepare the vault for entry.
    a. Check for dangerous atmospheric conditions before entering the vault using company-approved atmospheric sampling equipment
    b. Ventilate the vault, if required, in accordance with the Eversource Employee Safety Manual.
    c. Remove any standing water or debris from the vault in accordance with ENVIROWI-0105 or company-specific requirements, as required. This is located in the Environmental and Facility Procedures section of the Distribution Engineering Standards Bookshelf.

Network Protector Tools

The following fully insulated tools are available and may be useful for Network Protector service:

Tool Description	NU Stock Code
Wrench, Torque, 1/2” drive	572599
Wrench, Socket, extension bar, 1/2” drive, 12” long	572576
Socket size 3/4”, 1/2” drive, 6 pt.	571478
Socket size 9/16”, 1/2” drive, 6 pt.	571477
Wrench, Socket, T Handle, 33” long, 9/16” socket	572573
Wrench, Socket, T Handle, 33” long, 3/4” socket	572574
Wrench, Socket, T Handle, 33” long, 7/8” socket	572575
Test Probe	526792
ETI Relay Programmer	0400188*
MPCV Relay Programmer	527762

The above listed wrenches may be available in other lengths by special order. The insulation from the time of original manufacture has been increased at the request of Eversource and stock code revisions will reflect “FI” for “Fully Insulated”.

NOTE

The orange surface insulation on these tools has a yellow undercoat. If yellow is detected on the surface due to cuts or punctures, the surface insulation has been compromised and the tool should be retired.

Rolling Out and Isolating the Protector

REMINDER

Although it is not shown in some of the following figures, proper PPE must be worn while performing maintenance and testing on all Network Protectors.

NOTE

The MG8/9 Network Protectors are live-front, bolted-in-place devices requiring the handling of energized links and/or fuses. Because of this, it is imperative that they be out on the rails and isolated from the energized bus work of the enclosure before any work or testing is done.

The MG8/9 requires the following procedure for its removal from the housing.

1. Prior to operating the network protector handle, vent the protector cabinet as follows:
   a) Loosen the enclosure cover bolts on the side opposite from the operating handle in order to vent the protector.
2. Operate the network protector handle while standing to the side of the enclosure or as far away as possible from the front of the enclosure. Leave the handle in the “open” position.
3. Verify that the network protector mechanism is in the open position as follows:
   a) Inspect the network protector position indicator through the network protector enclosure window to ensure the Positive indicator reads OPEN.
   b) Use a clamp or rope style current transformer (CT) around the conductors of each phase, verify that the current on each phase is zero. (Zero current may indicate that the breaker position is open or the network protector fuses or cable limiters are blown.)
   c) Record the secondary voltages.

CAUTION

If the protector contacts do not open, *stop all work* and place the network protector in a safe condition and contact your supervisor.

4. Ensure that there are adequate clearances between energized parts and the ground and that the top housing and bottom barriers are in place.
   - Install temporary boards as necessary to provide adequate clearances.

CAUTION
The following steps require the use of a Company-approved insulated wrench and that you use wear the appropriate PPE.

5. For top-connected protectors:
   - Remove the fuses without disturbing the fuse connecting blocks. See Figure 1.
   - Remove the fuse connecting blocks and the screws securing the protector unit to the low voltage transformer bushing. See Figure 1.

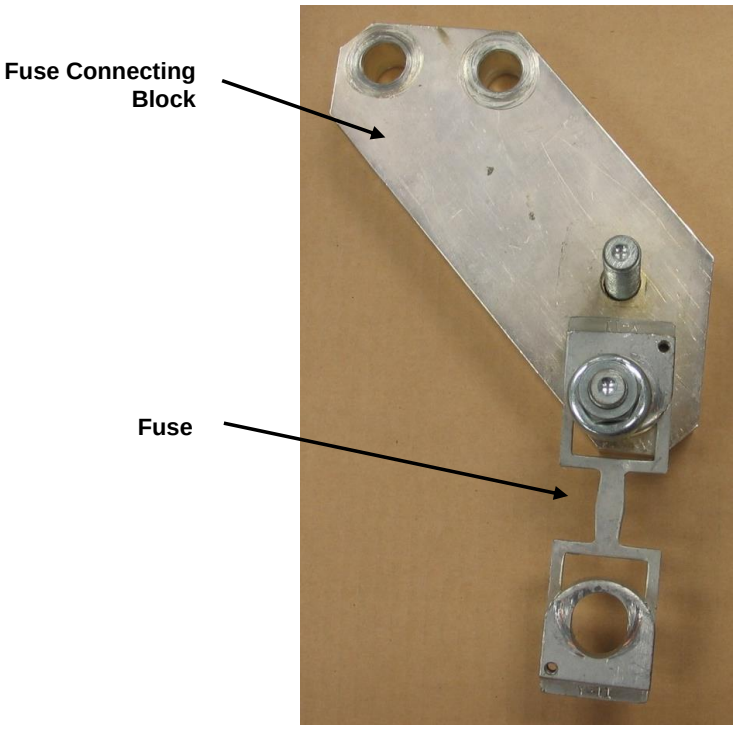

Figure 1 – Fuse Connecting Block and Fuse

For protectors above 1875 amperes:

- Remove the fuses at the top of the protector.
- Remove the disconnect links at the bottom of the protector unit.

CAUTION
On Network Protectors with the transformer bus on the bottom, remove the transformer links first to allow the removal of the fuse nuts.

6. Store all fuses, fuse nuts, and links on the inside door ledge of the Network Protector.
7. Loosen the 4 bolts that fasten the rollout unit to the housing.
8. Install the rail extensions, ensuring they are locked in place, and move the rollout unit from the housing.

Breaker Mechanical Inspection:

1. Record the counter reading.
2. Check for broken or damaged barriers on breaker and housing.
3. Check for any signs of liquid entry into enclosure, transformer throat, etc.
4. Check for indication of overheating, including discoloration of the bus or barrier boards or a greenish brown paraffin like substance in the bottom of the enclosure and area as this may indicate degradation of insulation backboards.
5. Use a drop of oil on all mechanism pins.
6. Inspect and clean the motor housing race.
   a) Inspect the motor and brushes for wear.
   b) Check the torque brake for absence of grease or oil and for wear on the drum and shoe surfaces.
   c) Check the gear reducer oil level.
7. Inspect for loose wiring at control components:
   - Motor control relay
   - Resistors
   - Terminals
   - Auxiliary switches
8. Check for frayed, cracked, or damaged control wire. Asbestos coated wiring or older wire harness may require an additional dielectric test to determine if it has reached its useful life. See Dielectric Testing.
9. Check for loose hardware.
10. Check the door gasket to ensure it is in good condition.
11. Fuse Inspection: (See Figure 2.)
    a) For the Y and Z fuses:
       - Examine the fuse element to ensure that no visible cracks are present in the element and there are no signs of slow melt.
    b) For the alloy fuses:
       - Examine the fuse element to ensure that no visible cracks are present in the element and there are no signs of slow melt.
       - Place the fuse flat on the top surface of the housing door.
       - Ensure that the fuses rock. Discard any alloy fuses that are annealed flat, thus eliminating the required spring action.

NOTE

480Y/277 Voltage units alloy fuses (shown on left) require the extended arc horn and addition barrier to properly clear the phase. Fuses are embossed with the style number that correlates to ampere and curve characteristics.

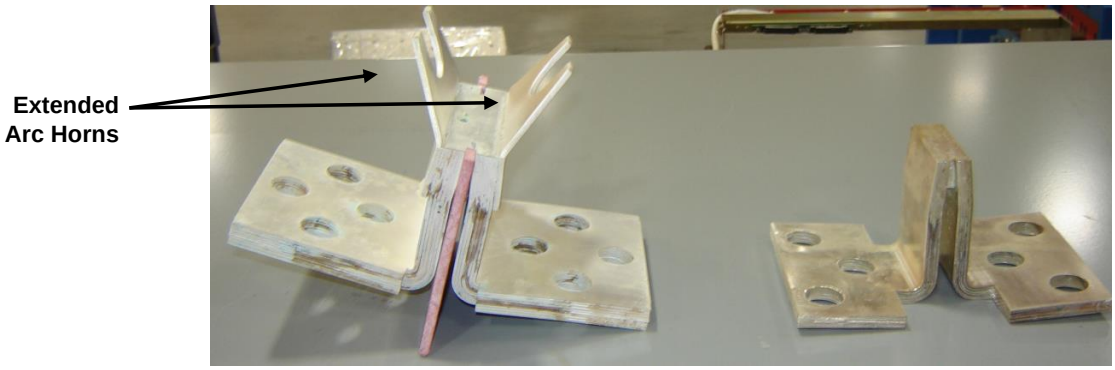

Figure 2 – Fuses

12. Remove and inspect the arc chutes and contacts.

CAUTION

Some arc chutes are made from asbestos. Use hazardous material handling procedures for these and *do not* clean them. Replace them instead.

- Arc chutes must be free and clear of any carbon buildup. Clean as necessary.
- Inspect contacts for excessive pitting and dress the contacts as necessary.

13. Check the cross bar insulation and ensure that no buildup is on the backboard between the phases.

14. Check for melted parafin in the bottom of the enclosure which indicates possible deterioration of the backer board.

Testing Sequence:

The next section is a series of tests defined to ensure proper operation at normal condition and at fault duty. It is important to perform the following tests in *this* order:

Test 1 Manual Breaker Operation Test

Test 2 Insulation Resistance Testing (Megger)

Test 3 Micro-Ohm Test (Ductor)

Test 4 Mechanical Electrical Test (Voltage Only Testing)

Test 5 Relay Tests

Test 6 Ground Fault Test (480V Unit Only)

Test 1 – Manual Breaker Test

1. Operate the breaker manually while it is on rails using an external closing prop on the handle. Close and trip the breaker 5 times to verify proper mechanical operation. At least one of these operations should be performed with the protector in the enclosure with the fuses removed.

Test 2 – Insulation Resistance Test (Megger)

The GE MG8/9 breaker is constructed upon a common insulated back board and requires periodic insulation integrity checks to ensure proper isolation. In addition, the breaker construction relies upon an insulated cross bar on the breaker. This ties all 3 phases together and must be periodically checked to ensure compliance.

1. Remove all potential leads from the breaker bus.
2. Remove A, B, and C Links to isolate the resistance circuit.
3. Using at least a 1,000 VDC Megger, complete the 9-point test outlined in the chart below: An acceptable value is 10 Meg Ohms or greater for a 1 minute time duration.

Backboard Insulation			
Breaker Position OPEN			
Reading Location	N1 to T1	N2 to T2	N3 to T3
Inspection Value			
Crossbar Insulation			
Breaker Position CLOSED			
Reading Location	N1 to GND	N2 to GND	N3 to GND
Inspection Value			
Crossbar Insulation			
Breaker Position CLOSED			
Reading Location	N1 to N2	N2 to N3	N3 to N1
Inspection Value			

Test 3 – Micro-Ohm Test (Ductor)

Perform an as-found and then after cleaning, a final ductor test. The maximum acceptable value for ductor testing is 25 micro-ohms or less, using a 100 Amp ductor.

1. With the breaker closed, connect the micro-ohm test leads to the network protector.
2. Test and record the value.
   - If the contact resistance (micro-ohm reading) is greater than 25 micro-ohms:
     - ❖ Open the breaker and clean the contact surface with Scotch Brite.
     - ❖ Re-test and record the "as-left" value.

Test 4 – Mechanical – Electrical Test (Voltage Only Testing)

Mechanical testing is defined as a "voltage only test" without the use of any network relays (electro-mechanical, solid state or digital). This testing is defined in the IEEE standard for Network Protectors C57.12.44. The basis for this type of testing is the minimum trip and close criteria required.

1. Remove all Network Relays.
   - The phasing relay Terminal Points 1 & 2 (wires No. 6-6A) must be jumped.
2. Connect the Test Set according to the manufacturer's instruction manual and local system operating conditions (phasing).

CAUTION
Failure to connect the leads in the correct sequence will cause damage to the Network Protector Test Set.

REMINDER
Proper PPE must be worn while attaching leads to an energized bus.

MIN CLOSE TESTING

1. Apply full system voltage to ensure closing operation when the CLOSE button is pressed on the TEST SET.
2. Trip the breaker with the trip lever.
3. Apply 73% of the L-L system voltage. See Table 1. The breaker should NOT close at this level. If the breaker closes, the motor control relay will need adjustment.

   The Motor Control Relay is located below the mechanism. To make adjustments:

   a) Remove the steel guard.

   b) Use 3/8" wrenches to hold the bottom fixed nut and adjust the upper nut.
      - o **Compress** the spring for a higher value.
      - o **Lengthen** the spring for a lower value.

4. Apply 80% of the L-L system voltage. See Table 1. The breaker should close.

Table 1 Test Values

Test	%	125/216V	277/480V
a) Minimum Trip	7.5%	16.2V or Less	36.0V or Less
b) Minimum Motor Close Voltage	73%	158V or Less	350V or Less
c) No Pickup (Motor Relay)	73%	158V or Less	350V or Less
d) Min Pickup (Motor Relay)	80%	160V – 173V	354V – 384V

Mechanical – Electrical Test (continued)

MIN TRIP TESTING

1. With the breaker closed, apply 7.5% of system voltage. See Table 1.
2. Press the TRIP button on the test set.
   - If the protector does not trip at this level, then a sensitivity adjustment is needed on the shunt trip level assembly. The shunt trip assembly and adjustment screw are located on the upper left side of the mechanism.

NOTE: To initially set this device, perform the following:

a) Manually close the breaker.
b) Adjust this screw upward until the breaker opens.
c) Turn the screw back down 1 turn after the opening.
d) Tighten the lock nut.
e) Re-test the min level to determine if this adjustment fits the trip range.

TRIP FREE TEST

NOTE:
During Trip Free operation, verify that the main contacts do not close.

Perform the following at full system voltage.

1. With the breaker open, hold the trip latch and hold the “close” button on the protector test set.
2. After two or three operations, release the trip latch. The protector should close on the next close operation.

Test 5 – Relay Tests

Electro-Mechanical Relay Tests

1. Perform the Master Relay Overvoltage test and adjust the relay as necessary in accordance with the following documents. Record the As-Found and As-Left values.
   - Network Protector Test Set Instructions
   - Relay Instructions
   - Network Protector Instructions
2. Perform the Phasing Relay Overvoltage test and adjust the relay as necessary in accordance with the following documents. Record the As-Found and As-Left values.
   - Network Protector Test Set Instructions
   - Relay Instructions
   - Network Protector Instructions
3. Perform the Reverse Current Limiting Trip test and adjust the relay as necessary in accordance with the following documents. Record the As-Found and As-Left values.
   - Network Protector Test Set Instructions
   - Relay Instructions
   - Network Protector Instructions
4. If a BN relay is installed, perform the Timing test and adjust the relay as necessary in accordance with the following documents. Record the As-Found and As-Left values.
   - Network Protector Test Set Instructions
   - Relay Instructions
   - Network Protector Instructions

Solid State / Microprocessor Relays

1. Perform an Overvoltage test and adjust the relay in accordance with the following documents. Record the As-Found and As-Left values.
   - Network Protector Test Set Instructions
   - Relay Instructions
   - Network Protector Instructions
2. Perform a Reverse Current Trip test in accordance with the following documents. Record the As-Found and As-Left values.
   - Network Protector Test Set Instructions
   - Relay Instructions
   - Network Protector Instructions

3. If a Time Delay is used, perform a Time Delay test in accordance with the following documents. Record the As-Found and As-Left values.
   - Network Protector Test Set Instructions
   - Relay Instructions
   - Network Protector Instructions

Test 6 – Ground Fault Test (480V units only)

CAUTION
The ground fault protection circuit between the protector and the customer main service is owned and maintained by the customer. Testing the lock out may call for all protectors to trip. An up-to-date drawing must be made available and reviewed to determine those steps which must be taken to prevent tripping of all protectors.

Verify trip from lockout and block the close of the protectors on all units having a ground fault scheme.

NOTE
The Ground Fault system is typically Customer-owned, and the Lockout is typically Eversource-owned. It is important to have an up-to-date print of the scheme prior to performing a test.

This test is only to be performed on those units equipped with a ground fault system.

GE MG8/9 Re-install Procedure

REMINDER

Proper PPE must be worn while performing the following steps.

CAUTION

A misaligned operating handle can result in the network protector mechanism remaining in the "Automatic" position with the network protector operating handle in the "Open" position.

1. Check the operating handle alignment before rolling the protector back into its housing. Ensure the base of the handle is aligned with the slot into which it will fit. See Figure 3.

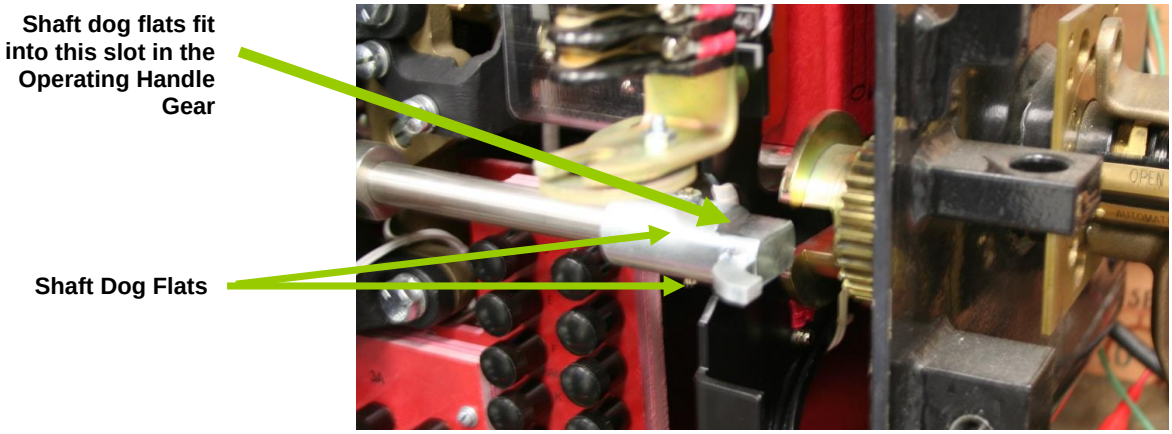

Figure 3 – Operating Handle Alignment Before the Protector is Reinstalled

2. Roll the unit back into the housing to its installed position. Proper alignment of the shaft dog is assured when the two flat surfaces of the shaft dog are fully engaged in the slot on the enclosure's geared operating handle. See Figure 4.

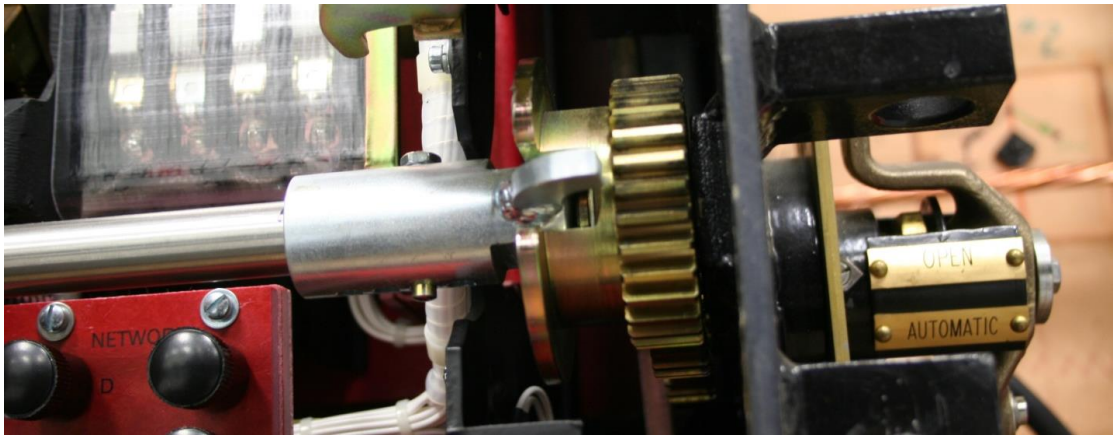

Figure 4 – Operating Handle Properly Aligned

3. With an insulated wrench, tighten the 4 mounting bolts.
4. Using test probes, verify that no shorts exists as follows:
   - For the “I Frame” style, place one insulated test probe at the breaker fuse mounting position for Phase A and the other probe on the network terminal fuse mounting position for Phase A with the protector breaker in the open position. See Figure 4.
   - For the “U Frame” style, the transformer bus touches the transformer shunts as the protector is rolled in, thus eliminating the safety probe on the transformer side.

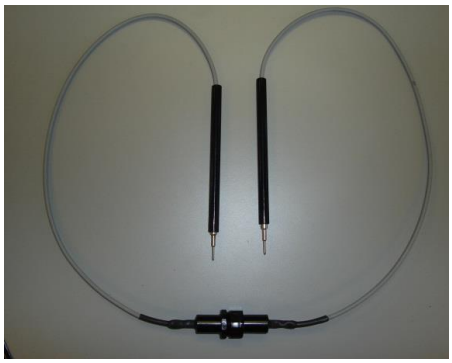

Figure 4 – Insulated Test Probe

5. Check the test fuse continuity across the test probes using a light tester, bell tester, or ohmmeter.
   - If the test fuse has not blown, install the Phase A network fuse using an insulated wrench and wearing the appropriate PPE.
   - If the test fuse has blown, roll the unit back out and check the protector and relays for phase-to-ground fault.
6. Repeat the previous step for testing the additional network phases and for testing the transformer side of the protector at the disconnect link mounting locations.
7. Apply anti-seize grease to the door bolt hardware.
8. Apply gasket preservative to the door gasket.
9. Tighten all door bolts. **NOTE**: Use of impact tools is not recommended and could lead to moving stop nuts for proper sealing and premature door gasket damage.
10. Verify the protector enclosure is holding pressure using a pressure gauge/fill device. If it is not, perform a **leak check** on those network protectors with submersible enclosures as follows:
    a) Pressurize the enclosure with 5 PSI of dry nitrogen.
    b) Apply a soap solution to the door gaskets, enclosure penetrations, throat gaskets, operating handle gaskets, welds, etc.
    c) Let this sit for 30 minutes.
    d) Check for leaks by looking for soap bubbles. Fix any leaks if possible.
    e) Record any leaks on the inspection form and alert supervision.

f) Reduce the pressure within the enclosure to (**see Addendum A**) psi.

11. Place the operating handle in as-found position.

12. Record the as-left counter reading.

Revision Changes

Revision 1 – Effective Date: **March 6, 2013**
Related Feedback: MS-0158

Revision 1	Description of Changes
1.	Removed all references to TD 871, which has been superseded.
2.	Revised ""Before You Begin" section to incorporate more detailed safety information previously contained in Network Operating Policy.
3.	Moved all cautions to before the steps to which they apply.
4.	Added list of insulated tools that may be useful for Network Protector maintenance.
5.	Page 9, Test 3 – Micro-Ohm. Sentence starting: "The acceptable value…" is changed to "The maximum acceptable value…"
6.	Added steps to add Operating Handle alignment as part of Re-Install procedure on page 16.
7.	Step added to "record the secondary voltages" under Rolling Out and Isolating the Protector.
8.	Replaced reference to Accident Prevention Manual with reference to NU Systems Safety & Health Handbook.
9.	Appended Vendor Technical Manual to the end of the instructions.
10.	Added reference to Network Operating Policy in Instruction 6.30 – Network Transformers.
10.	Changed Ductor Test acceptable value from 25 ohms to "25 ohms or less".
11.	Removed Caution regarding oil leaking from the enclosure, as protectors do not contain oil.

Revision 2 – Effective Date: **July 1, 2015**
Related Feedback – None

1.	Changed names of the Owner, SME, and Approvers on the Signature page, as required.
2.	Incorporated the following global replacements: • NU Maintenance Manual replaced by Eversource Maintenance Program. • CL&P replaced by Eversource Connecticut. • WMECO replaced by Eversource Western Massachusetts. • PSNH replaced by Eversource New Hampshire. • NSTAR replaced by Eversource Eastern Massachusetts. • NUMM replaced by EMP.
3.	Incorporated the following global replacements: • NU Safety Manual replaced by Eversource Employee Safety Manual.

Revision 3 – Effective Date: **July 1, 2017**
Related Feedback – N/A

1.	All stock codes changed to the new Maximo number.
2.	Approvers updated

Network Protector Instruction Manual

Type 137NP

800 to 3500 Amperes

Richards
MANUFACTURING COMPANY, SALES, INC.
517 LYONS AVENUE, IRVINGTON, NJ 07111
Phone 973-371-1771 Fax 973-371-9538

IM 1224-001A

DISCLAIMER OF WARRANTIES AND LIMITATION OF LIABILITY

All equipment or component parts manufactured or distributed by Richards Mfg. Co., Sales Inc. are expressly warranted by Richards to be free from defect in workmanship or material when subjected to normal and proper use. Said warranty shall be for a period of one (1) year from the date of installation of such equipment not to exceed eighteen (18) months from the date of shipment of such equipment. Notice of any claim arising out of this warranty shall be made in writing within the warranty period. Richards' sole liability and buyer's sole remedy under this warranty shall be limited to the repair or replacement, FOB factory, of any equipment or part determined to be defective in either material or workmanship. This warranty does not apply to any equipment, part or component requiring repair or replacement due to improper use or when determined to have been subjected to abnormal operating conditions or in the event of buyer's failure to follow normal maintenance procedures.

No warranty or guarantee expressed or implied, including any warranty or representation as to the design, operation, merchantability or fitness for any purpose is made other than those expressly set forth above which are made in lieu of any and all warranties or guarantees. Richards Mfg. Co. shall not be liable for any loss or damage, directly or indirectly, arising out of the use of equipment or parts (including software) or for any consequential damages, including but not limited to, any claims for buyer's lost profits or for any claim or demand against the buyer by a third party.

Richards Mfg. Co. assumes no responsibility for any damage or loss resulting from the use of this manual. Information in this document is subject to change without notice.

SAFETY INFORMATION

This manual is intended for use by qualified individuals responsible for the installation, maintenance and operation of network protectors. Potentially unsafe conditions exist when installing, maintaining or operating network protectors.

All applicable safety procedures should be adhered to when installing, maintaining, or operating network protectors.

Only qualified electrical personnel should be permitted to work on 137NP Network Protectors.

De-energized and rack out the network protector mechanism before any maintenance procedure.

Never defeat safety interlocks on the network protector.

Never energize a partially assembled network protector.

Use extreme caution when installing or working on an energized protector.

Use insulated tools and gloves when working on energized network protectors.

Perform all appropriate electrical tests before any installation or operation of the network protectors.

WARNING

Before unpacking, installing, servicing, or operating 137NP network protectors read this manual thoroughly.

For additional information, contact Richards Mfg. Co. directly.

For application information, consult Richards Mfg. Co. or see appropriate ANSI Standards.

Do not operate 137NP network protectors under load except in appropriate enclosures.

The Richards 137NP Network Protectors are designed for secondary network application at 125/216 volt and 277/480 volt wye connected systems. Do not exceed design ratings.

Submersible Transformer Mounted

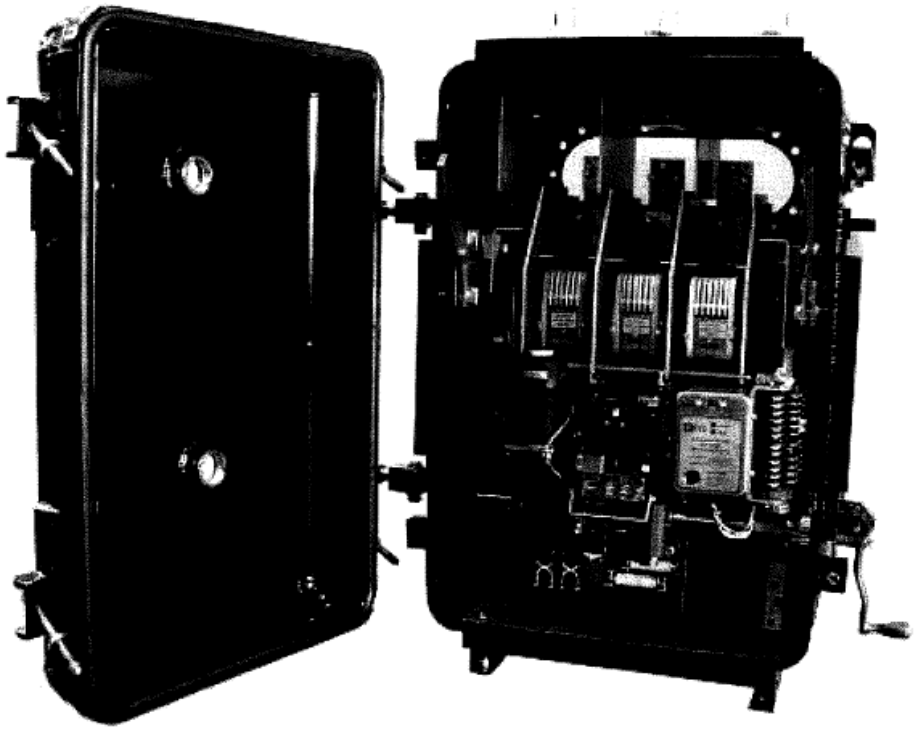

TABLE OF CONTENTS

	PAGE
I. OVERVIEW	1
A. Introduction	1
B. 137NP Submersible Network Protector	1
C. 137NP Non-Submersible Network Protector	2
II. INSTALLATION	2
A. Receiving, Handling and Storage	2
B. Transformer Mounted	3
C. Separately Mounted	3
D. Opening Enclosures	4
E. Removing the Breaker Unit	4
F. Connections	7
G. Relay Installation	7
III. MAINTENANCE	8
A. Schedule	8
IV. INSPECTION AND TESTING	10
A. Phasing	11
B. Manual Operation	11
C. Electro-mechanical Relays	11
D. ETI MNPR® Microprocessor Relays	12
E. Electrical Testing	12
F. Checking the Minimum Tripping Voltage	13
G. Checking the Minimum Motor Closing Voltage	13
H. Checking the Motor Control Device	14
I. Mechanical Checks	14
J. Return to Service	14
V. THE REMOVABLE UNIT	15
A. Arc Quenchers	15
B. Contact Construction 800 through 1875 Ampere Protectors	18
C. Contact Construction 2000 through 3500 Ampere Protectors	19
D. Assembly of 2000 through 3500 Ampere Contact Head	20
E. Current Transformers	22
F. Auxiliary Switch	22
G. Mechanical Indicator	24

H. Operating Mechanism 24
I. Motor Control Device 26
J. Trip Mechanism 27
K. Operating Motor 31
L. Torque Brake 32
M. Gear Assembly 33
N. Manual Operation 33
O. Manual Cutoff Switch 34
P. Closing Linkage 34

VI. THE ENCLOSURE 34

A. Cover Gasket Replacement 35
B. Changing Location of Operating Handle 36
C. Packing 37

VII. DIAGRAMS

Wiring Diagram, 125/216 Volt, 800-1875 Amp Protectors 38
Schematic Diagram, 125/216 Volt, 800-1875 Amp Protectors 39
Wiring Diagram, 277/480 Volt, 800-1875 Amp Protectors 40
Wiring Diagram, 277/480 Volt, 800-1875 Amp Protectors 41
Wiring Diagram, 125/216 Volt, 2000-3500 Amp Protectors 42
Schematic Diagram, 125/216 Volt, 2000-3500 Amp Protectors 43
Wiring Diagram, 277/480 Volt, 2000-3500 Amp Protectors 44
Schematic Diagram, 277/480 Volt, 2000-3500 Amp Protectors 45

I. OVERVIEW

A. Introduction

The automatic network protectors covered by this instruction book are of the heavy duty, motor-operated types for application in secondary AC network systems and are designated as submersible and non-submersible.

The Richards 137NP Network Protector consists of a circuit breaker, a motor operated mechanism, and an ETI Microprocessor Network Protector Relay that combines the functions of a network master relay, and a network-phasing relay. The ETI MNPR® provides all modes of operation, including sensitive, insensitive, time delay, instant, watt-var, and inverse watt-var.

B. 137NP Submersible Network Protector

The 137NP network protectors consist essentially of a circuit breaker, a motor operated mechanism, the necessary controlling relays, and auxiliary apparatus. These are all enclosed in a water-tight case, for use in locations subject to submersion.

The breaker unit is an integral unit which is removable from the enclosure. The breaker forms the rear portion of the unit with the operating mechanism and relay equipment in front.

The cover of the enclosure may be hinged from either side. Clear glass inspection windows permit reading the operation counter and inspection of the fuses without opening the cover. The enclosure is provided with an external handle for manual operation of the breaker unit. This handle may be mounted on either side of the case as desired. A pressure test valve is provided so that the enclosure may be tested for air tightness. Convenient pipe plugs are also located on the side of the enclosure to permit installation of external auxiliary circuits, if so desired. Lifting eyes are provided on all enclosures. Temporary and permanent mounting supports are additional provisions. The cover is sealed to the case with gaskets compressed by clamping strips and bolts.

There are two general styles of 137NP network protectors; one with the protector arranged for wall or framework mounting independently of the network transformer, "Separately Mounted", and the other for bolting on to a three phase network transformer, "Transformer Mounted". Separately mounted protectors are arranged for connection of the cables from the network transformers at the bottom of the enclosure and those to the network at the top. In the transformer mounted style the connection to the transformer is made by bolting the protector buses directly to the transformer secondary terminals.

Standard terminal facilities consist of various configurations of tangs, studs and quick disconnect terminals surrounded by an insulator. Limiter and non-limiter terminals are also available.

C. 137NP Non-Submersible Network Protectors

The non-submersible 137NP network protectors are generally similar to the submersible except that non-submersible enclosures are provided. These protector units are for applications in clear dry vaults. Equipment mounted enclosures (open framework) protectors are also available.

As in the case of submersible protectors the non-submersible type may be arranged for wall or framework mounting, or for bolting directly to the network transformers. Terminal facilities may be arranged for connection of one to four cables per phase, or for bus bar connections.

All protectors are arranged to permit the ready removal of the breaker unit without disturbing the cable connections.

II. INSTALLATION

CAUTION: ALL NETWORK PROTECTORS MUST BE MOUNTED VERTICALLY.

It may be well for original users of this device to set one up temporarily in a service shop, so as to become familiar with its characteristics and construction before installation on the system. See section on **Opening Enclosures**.

A. Receiving, Handling and Storage

Care should be exercised when unpacking a protector so that no damage is caused in any way, and a careful inspection made to see that no parts are damaged, missing or destroyed with the packing material. Mounting hardware (transformer mounted protectors) is shipped in separate cartons. Relays are shipped in separate cartons.

In handling or storing network protectors, always keep top up as marked on packaging.

Unsupported network protectors are unstable. Before removing shipping packaging, it is recommended that a protector be supported from a sling or other suitable means to keep it from falling over when the crating is removed.

Lift and handle the uncrated protector by the lifting eyes at the top of the case.

NOTE: Do not use the lifting eyes provided on the breaker unit for handling the complete equipment mounted protector. These lifting eyes are provided for handling the breaker unit only. Slings with spreaders are recommended to prevent damage to the upper terminals and barriers of the protectors.

Transformer-mounted, top-connected, submersible and non-submersible protectors are provided with permanent feet so that these protectors will rest upright on the floor. Separately mounted submersible protectors are provided with temporary feet to protect the

lower terminals when these protectors are set upright on the floor. These feet may be removed, when these protectors are bolted in position, to provide clearance for making cable connections.

Equipment-mounted protectors will not stand unsupported on the floor. When handling or resting these protectors on the floor, be careful not to damage the lower barriers or terminals and, if necessary, place a block under the channel framework

If the protectors are not to be used for some time, store in the packaging in which received.

B. Transformer Mounted Protectors

Submersible and Non-Submersible Units

Remove the breaker unit before mounting the enclosure of transformer mounted protectors on the transformer. Then remove the throat plate from the rear of the enclosure. The throat gasket is supplied with the network transformer. Mounting hardware is shipped in a separate bag including the lower supporting feet and the necessary hardware for securing the protector to the transformer.

The transformer throat gasket supplied with the network transformer should be treated with Glyptal and assembled to the clean surface of transformer throat flange. This gasket will be held in position by the dowel pins on this flange.

Lift the protector enclosure and guide it into position using the dowel pins provided on the transformer throat flange. Then tighten all throat bolts down evenly so that the throat gasket is compressed from about 40 percent to 50 percent of its thickness. Add the feet at the bottom of the enclosure using the proper number of spacers between the bottom of these feet and the transformer.

Just before placing the unit into the protector, clean the transformer terminals with the back of the bus bar of the protector. Use a brass wire brush and then wipe with a clean cloth.

C. Separately Mounted Protectors

Separately mounted network protectors may be mounted on a suitable framework or against the wall. The submersible protectors are secured in place by the two lugs at the bottom back of the enclosure. The non-submersible protectors are secured in place by mounting either in a pipe framework or placing bolts through the holes provided in the back of the channel framework

After submersible, separately mounted, protector enclosures are permanently mounted the feet at the bottom of the case may be removed for better access to the terminals.

D. Opening Enclosures

Before opening the enclosure, submersible and non-submersible protectors should be mounted in their final locations or if to be temporarily supported they must be securely anchored by the lifting eyes to a firm post or part of a building to keep the protector from tipping forward. To make inspection easier, the protector may be set up on some blocks, but if this is done, make sure the bottom of the protector cannot move when the breaker unit is rolled forward.

Most equipment mounted protectors may be rested upright on the floor without removing the lower barriers or lower terminals. However, when the lower barriers or terminals extend below the bottom of the channel frame the protector will have to be rested on blocks placed under the channels. Firmly secure these protectors to a post or a part of the building so that they will remain upright.

If the relays are to be tested on a temporarily mounted protector, the protector must be in a vertical position.

After temporarily supporting or permanently mounting the protector, the enclosure may be opened by unscrewing the cover bolts. If necessary, pry the cover open but do not damage the gasket with the instrument used to pry the cover loose.

E. Removing the Breaker Unit (see Figure 1 and 2)

Submersible and Non-Submersible Protectors

Remove the fuses and disconnects as outlined below for the different arrangements of protectors. Then lift the folding rails up and forward and lower them to the horizontal position so that they form a continuous surface with the rail in the enclosure. The unit may be rolled forward, after removing the four mounting screws.

WARNING: The manual operating handle must always be in the OPEN position before the breaker unit can be rolled forward or back into position for remounting in the enclosure.

1. Transformer Mounted Protectors

Top connected protectors. **Warning, the following sequence must be followed.** First remove the fuses without disturbing the fuse connecting blocks, then remove the fuse connecting blocks and the screws securing the protector unit to the low voltage transformer bushing. Reverse above procedure for replacing the protector unit.

2. Separately Mounted Protectors

Remove the fuses at the top of the protector and the disconnecting links at the bottom of the protector.

3. Equipment Mounted Protectors

The breaker units for the various arrangements of equipment mounted protectors may be removed in a manner similar to which the breaker units are removed from submersible and non-submersible protectors.

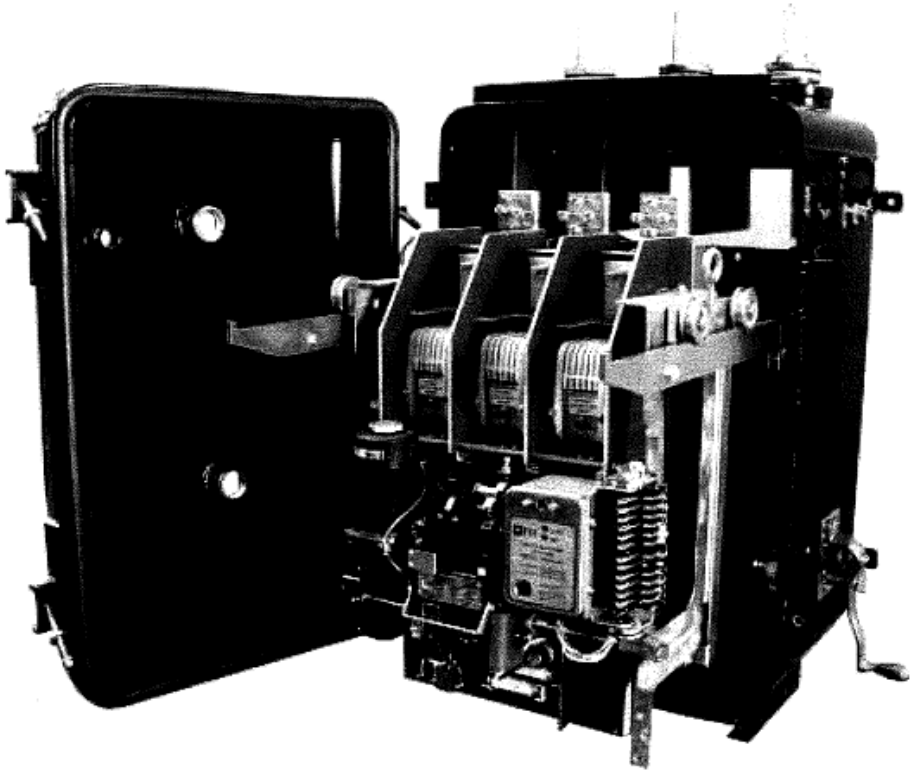

Figure 1 - Removable Unit Rolled Out On Rails

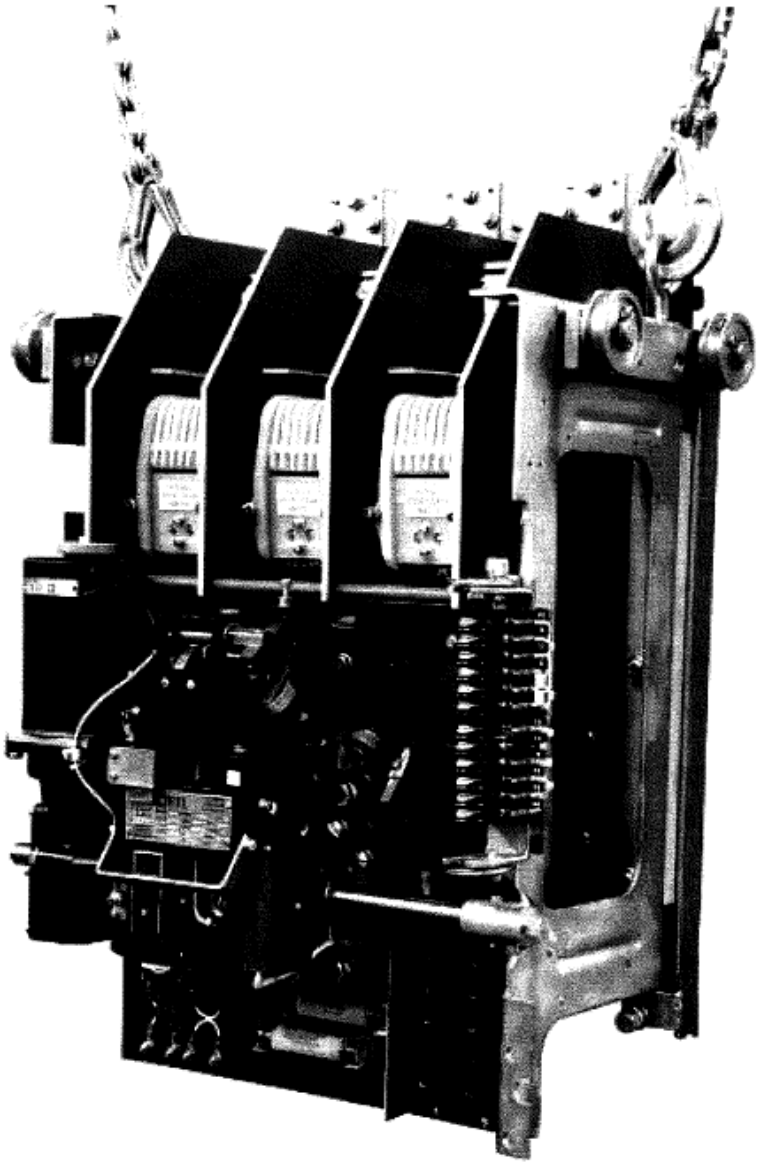

Figure 2 – Removable Unit Supported From Lifting Eyes

F. Connections

Cable connections should not be made until after fuses have been removed from protector. Do not replace fuses until all tests and checks outlined under **INSPECTION AND TESTING** have been made.

G. Relay Installation

After the protector has been installed either permanently or temporarily for testing, the network protector relay may be installed in the protector.

To install the relay, unscrew the knurled thumbscrew, move the claw-shaped cam counterclockwise and then place the relay in position, making sure that the contact blades on the relay line up with the stationary contacts. Move the cam clockwise to jack the relay into position. Screw knurled thumbscrews down to secure the relay. The relay is now free to swing through a large angle. To fasten the relay in its operating position, move the relay clockwise and pull latch forward.

New network protectors are wired for microprocessor type relays unless otherwise specified.

1. **Closing In On Dead Networks**

   a. Electromechanical Relay

   Network protectors with electromechanical relays may not close on a dead network to which there is no connected load. To be sure protectors will always pick up a dead network, particularly on a new system, or on spot networks for power only, it is recommended that a resistor load of 500 watts be connected between phase to which the phasing relay is connected and ground. Or on delta-connected systems, connected 250 watts between each phase (750 watts total). A 5.0uf capacitor may be used in place of the 500 watt resistor and 2.0uf capacitor in place of the 250 watt resistors. When the load on the secondary network grid reaches a point where all of the load will never be disconnected, the above mentioned resistors or capacitors may be removed from the grid.

   b. ETI MNPR® Microprocessor Relay

   Network protectors with ETI MNPR® microprocessor relays will close on a dead network with or without connected load.

III. MAINTENANCE

A regular inspection and maintenance schedule for network protectors is recommended. While experience will best indicate the frequency with which inspections should be made, the following routine is suggested.

In all cases open the protector manually and lock in the open position first, then remove fuses and the test caps before working on or inspecting or testing protector.

A. Schedule

1. At Installation

Complete inspection and test. See **INSPECTION AND TESTING**.

2. After First 24 Hours of Automatic operation

Read operation counter to make sure that the protector is not operating excessively. Twenty-five operations or less are not excessive for initial installations, and even fifty operations are not too many if the network load is to be increased soon. Additional load will eliminate a large percentage of the operations. If the number of operations during the first 24 hours is considered excessive, a check should be made to see that the mechanism operates positively. If it does, the protector is being operated by numerous power reversals. To correct this, the programming of the relay may need to be revised.

3. After First 48 Hours

Again read operation counter. If the number of operations is normal, daily reading may be discontinued.

4. After First Week

Read operation counter.

5. After First Month

Read operation counter.

6. After First Six Months

Complete inspection and test.

7. Yearly

Fully inspect and test protectors including relays and perform the following preventive maintenance.

a. Remove breaker from the enclosure and inspect and clean the contacts.
b. Check wiring terminals for tightness.
c. Remove trip mechanism and inspect and clean mechanism if necessary. The protector mechanism is thoroughly lubricated at the factory and this lubrication should last for some time. However, if it appears that the mechanism requires lubrication, use SAE-30 machine oil on bearings. Wipe off all excess as the excess will collect dirt and nullify the effect of the lubricant.
d. The bearings of the secondary latch shaft, Figure 15, should have just a drop of SAE-30 machine oil added if necessary and the latch surface should be coated very thinly with high grade petroleum jelly, to prevent rust.
e. Check the level of the lubricant in the gearbox, Figure 17. If necessary add sufficient #4 hydraulic oil
f. Remove one brush holder and brush from motor and inspect commutator surface with flashlight. If necessary, remove and disassemble motor and clean commutator.
g. Lubrication of the motor bearings should not be necessary during the life of the motor. However, if lubrication is found necessary after a number of years, remove the motor, dismantle it, wash the bearings out thoroughly and repack them with a small quantity of grease.
h. Clean torque brake when motor is removed.
i. Check auxiliary switch contacts and clean if necessary.
j. Check motor control device contacts and clean if necessary.
k. Check mechanical indicator.

8. After Heavy Primary Short Circuits

Inspect protectors which have interrupted short circuits, cleaning the devices and resurfacing the breaker contacts.

9. De-energize Primary Feeders

Each feeder should clear completely, as indicated by the feeder voltmeter, if all the protectors are set to trip on transformer exciting current. On re-energizing the feeder, each protector should reclose as the load increases.

IV. INSPECTION AND TESTING

CAUTION: DO NOT OPERATE THE PROTECTOR, EITHER MANUALLY OR ELECTRICALLY, UNLESS IT IS IN A VERTICAL POSITION.

Before placing the protector in service it should be tested. Tests may be made with protector in its final location or with the protector in a temporary location in the service shop. If temporarily located be sure to secure the protector as described under **Receiving, Handling and Storage**. The breaker unit of submersible protectors may be either bolted in place in the housing or rolled out of the rails.

Always open the protector manually first; second, open the enclosure cover; third, remove fuses, and fourth remove all test caps before testing, working on, or inspecting the protector.

Test caps, Figure 3, located on the auxiliary panel below the breaker mechanism, provide a means of disconnecting control wiring from the main circuit. This is accomplished by removing insulated test caps to de-energize control wiring and tightening these test caps to energize control wiring. With the insulted test caps removed, provision is made on the projecting studs for the attachment of test clips so that control wiring may be energized from a separate source.

On new installations the fuses should be removed before the cables are connected and should not be replaced until the following tests are completed.

The protectors are shipped with the manual operating handle wired in the open position, the trip latch tied up and the folding rails wired down. Remove these ties before starting tests.

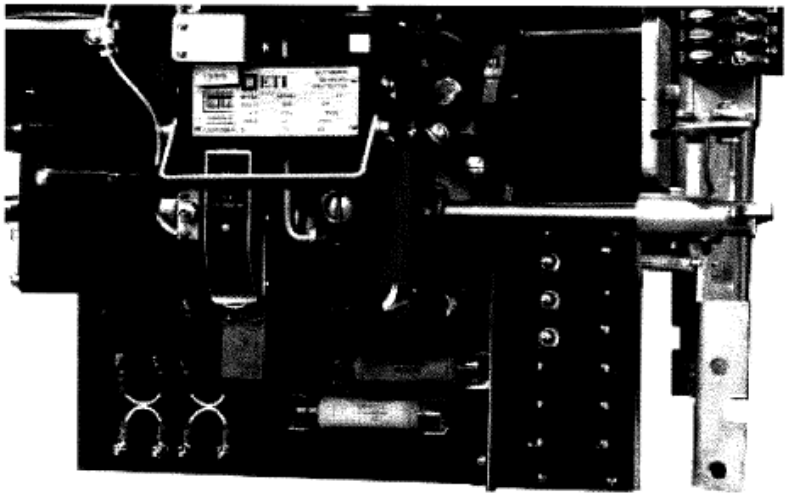

Figure 3 – Auxiliary Panel, Potential and Test Switches

A. Phasing

Phase out connections to protector to insure that "cross-phase" connection will not be made when the breaker is closed. Network voltage is available on network side of fuse mounting. Transformer voltage is available on opposite end of fuse mounting when the protector is closed.

B. Manual Operation

Close and open the breaker several times by hand. To do this swing the manual operating handle from the "open" to the "closed" position and when the breaker is closed return to the "open" position. The breaker should close with considerable pressure. If the hand-wheel of the motor is turned the motor cam may be advanced to a position where it will prevent the normal resetting of the mechanism after tripping. If this happens, turn the hand-wheel clockwise until the mechanism resets. Then turn two more revolutions. Now close the breaker manually and trip by lifting the extended lever above the trip coil. Repeat this operation, returning the manual handle to the "automatic" position. The trip mechanism and operating mechanism should reset.

C. Electro-mechanical Relays

The correct operation of the electromechanical type network master relay depends upon the application to the relay coils of currents and voltages of the proper phase sequence. For this reason the phase sequence of the network should be checked before putting a protector into service. This can be done by making a temporary reconnection of the phasing relay and observing its operation as follows:

1. Make the temporary change in the wiring of the phasing relay as indicated on the wiring diagram for the network protector.

2. Replace test caps B, C, and F only.

3. Trip protector open and move operating handle to "open" position. Do not close protector during this test.

4. Connect the network side of the protector to the network.

5. Observe the operation of the phasing relay contacts. If the relay contacts close with a strong torque toward the right, the phase sequence is 1, 2, 3. If the relay contacts open or move to the left, the phase sequence is 3, 2, 1.

The phase sequence of the protector is determined by the lead connections as shown on the wiring diagram. In general, network protectors are wired for 1, 2, 3 phase sequence at the factory. Protectors may be obtained which are wired 3, 2, 1 phase sequence if desired. (Note: Protectors wired for 1, 2, 3 phase sequence may be used with a 3, 2, 1

phase sequence provided four leads are interchanged in accordance with the wiring diagram).

6. Return the phasing relay connections to normal.

7. Remove test caps B, C, and F for the following tests.

D. ETI MNPR® Microprocessor Network Protector Relays

The relay will not close its contacts on a crossed phase system. It is, also, insensitive to phase sequence and will function accurately for protectors wired with phase sequence 1-2-3 and installed on systems wired 3-2-1.

E. Electrical Testing

When these observations have been completed the protector may be operated electrically to check the mechanism operation. These tests should be performed using a network protector test kit. Explicit instructions are included with these test kits. If a test kit is not available the following method can be used.

1. Remove the electromechanical or solid state relay and insert a jumper across terminals 1 and 2 (wire No. 6-6A) of the phasing relay plug (if provided).

   a. On 120/216V units connect a 216V source to studs K and L to energize the operating circuits. Connect the closing contact of a control switch to terminals 2 and 3 (wire No. 6-11) of the master relay plus and a tripping contact to terminals 1 and 3 (wire No. 41-11). Activate the "closing contact" of the control switch. If the manual operating handle of the protector is in the automatic position the protector will close.

      Activate the "tripping contact" of the control switch. The protector should now trip.

      Turn the manual handle to the "open" position. Activation of the closed contact of the control switch should not close the protector.

   b. On 277/480V units connect a 480V source to studs 11 and 21 for trip circuit test, and studs 11 and 3A for motor and motor control circuit tests. Repeat test a. above.

If the mechanism over travels, and goes through a trip-free operation before closing, remove the motor and clean torque brake. If the breaker has been turned upside down or front side down, oil from the gearbox may run into the torque brake making it ineffective.

Figure 4 shows a test set up for obtaining the various voltages required for testing the protector mechanism. The variable auto-transformer should have inputs of 208 and 460 volts with a 16 amp current rating.

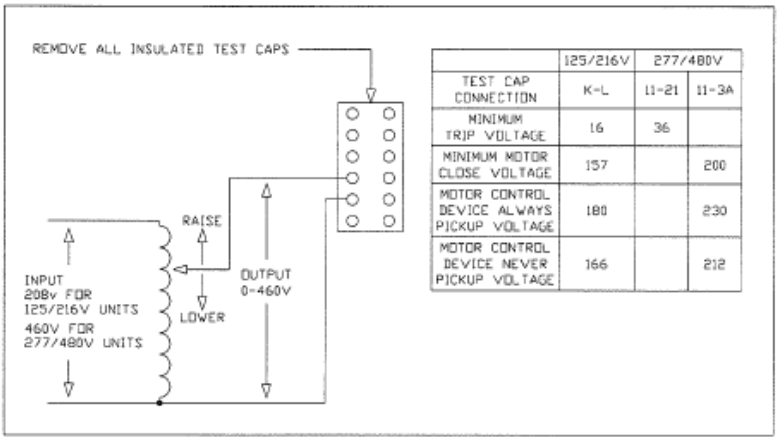

	125/216V	277/480V	
TEST CAP CONNECTION	K-L	11-21	11-3A
MINIMUM TRIP VOLTAGE	16	36	
MINIMUM MOTOR CLOSE VOLTAGE	157		200
MOTOR CONTROL DEVICE ALWAYS PICKUP VOLTAGE	180		230
MOTOR CONTROL DEVICE NEVER PICKUP VOLTAGE	166		212

Figure 4 – Single Phase Test Circuit

F. Checking the Minimum Tripping Voltage

Using the auto-transformer test set up as described in Figure 4 apply 16 volts to studs K and L on 125/216V units and 36 volts to studs 11 and 21 on 277/480V units. Connect the tripping contact of a control switch across terminals 1 and 3 (wire No. 41-11) of the master relay plug. Activation of this contact should trip the protector.

G. Checking the Minimum Motor Closing Voltage

Using the auto-transformer test set up as described in Figure 4, apply 157 volts to studs K and L on 125/216V units and 200 volts to studs 11 and 3A on 277/480V units. Connect the closing contact of a control switch to terminals 2 and 3 (wire No. 6-11) of the master relay plug. Close the motor relay by hand by lifting up the plunger. Activate the closing contact of the control switch. The motor should close the protector. There is no adjustment for minimum closing voltage. This test merely shows that the motor has sufficient torque to close the protector.

H. Checking the Motor Control Device

Using the test set ups as previously described apply the following voltage levels to the protector control circuits.

1. For 125/216V units. The motor control device should never pick up at 166 volts and should always pick up at 180 volts. With the protector open apply 166 volts to studs K and L. Activate the closing contact of the control switch. The protector should not close. Repeat 10 times. If pickup occurs reset the motor control device by turning the calibrating nut (see Figure 13) up. Recheck.

   Trip protector and apply 180 volts to studs K and L. Activation of the control switch closing contact should now close the protector. Repeat 10 times. If it does not, turn the calibrating nut of the motor control device down and recheck at 180 and 166 volts.

2. For 277/480V units the motor control device should never pick up at 212 volts and should always pick up at 230 volts. Apply these values to studs 11 and 3A and repeat test 1.

Where laboratory test facilities are not available or for other reasons it may be desirable to test the network relays in the field on the protector. These tests should be performed using a network protector test kit. Explicit instructions are included with these test kits.

I. Mechanical Checks

1. Check for resetting on trip-free operation. See instructions under **Trip Mechanism**.

2. Check the level of the oil in the gearbox. It should be up to the bottom of the ¼ inch plug on the side of the gearbox. If not, apply a sufficient amount of #4 hydraulic oil to bring the level to the proper point.

3. See that the polished part of the secondary latch shaft, Figure 15, is covered with a very thin coat of high grade petroleum jelly.

J. Return to Service

1. Replace all test caps.

2. Replace relays.

3. Replace fuses.

4. Close cover.

5. Move manual operating handle to automatic position. If voltage conditions are proper, the breaker will close.

6. Place air pressure test on enclosure to be sure it is tight. See instructions under **THE ENCLOSURE**.

During the mechanism tests, note the operation of the mechanical indicator and the operation counter. The indicator should read closed when the breaker is closed and open when the breaker is open. The operation counter should record each complete protector operation. Before energizing the control wiring make sure that the contacts of the motor control device are latched open.

It should be unnecessary to make high potential tests on protectors, because they are completely tested before leaving the factory. If, however, it is desired to make such tests a potential of 2000 volts AC may be applied for 60 seconds from each main conductor to ground and between any two main conductors.

Caution: During such tests see that the motor leads are disconnected and network relays, as well as the indicating lamps (if provided) are removed from the protector.

The motor may be tested at 900 volts AC 60 cycles, for 60 seconds, and the relays tested separately at 1500 volts AC for one second. Field hipot test values are 75 percent of factory test values.

V. THE REMOVABLE UNIT

Figure 5 shows a typical removable unit for the 137NP network protectors. The circuit breaker part of this unit is of the air-break type and it utilizes arc quenchers for restricting and extinguishing the arc.

The details and arrangement of the main conductors vary in accordance with the ampere ratings of the protectors, as well as with the different types of protector mountings. For the 800 through 1875 ampere ratings these main conductors or contact bars are made of solid copper, while for the 2000 through 3500 ampere ratings they are made of square hollow copper tubing

A. Arc Quenchers (see Figure 5 and 6)

The arc quenchers are held in place by two captive screws at the sides of the assembly. Loosening these two supporting screws permits tilting the arc quencher forward for examination of the arcing contacts of the breaker. For complete removal of the arc quencher it is also necessary to remove the four screws in the front of the assembly which secure the end of the flexible connection to the terminal plate of the magnetic blowout coil. On replacing the arc quencher, make sure that this flexible connection is properly connected and all screws are tight.

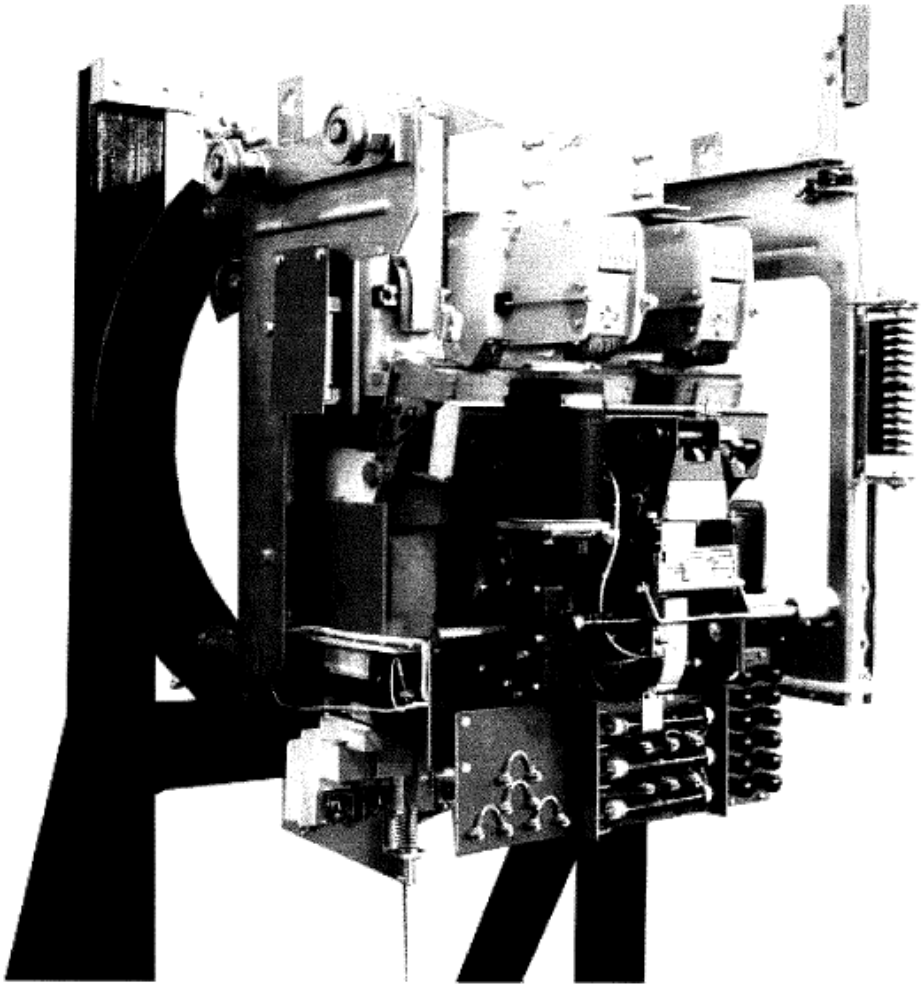

Figure 5 – Removable Unit On Network Protector Stand

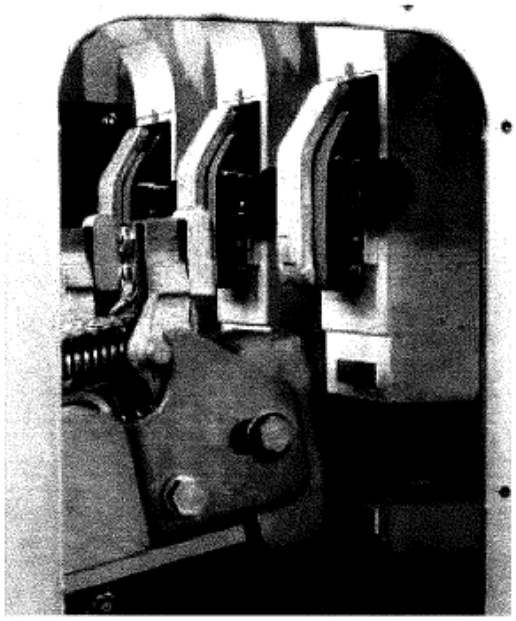

Figure 6 – Contact 800 to 1875 Amp Units

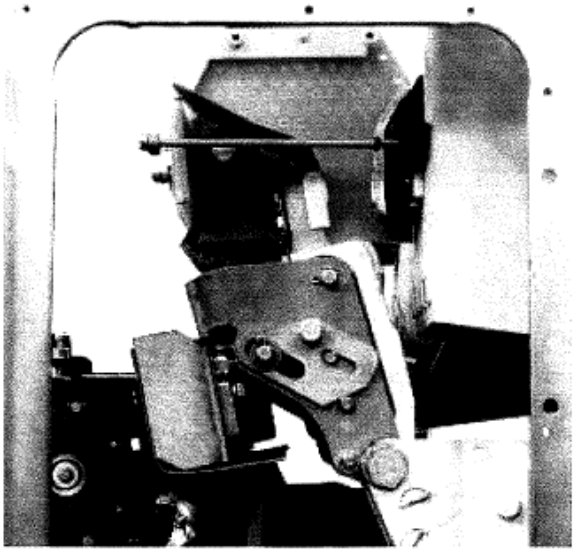

Figure 7 – Contact 2000 to 3500 Amp Units

B. Contact Construction for 800 through 1875 Ampere Protectors

Each breaker pole has a set of main current-carrying contacts and a set of arcing contacts (see Figure 6). The main current-carrying contacts consist of pieces of silver-allow brazed to the contact bars and to a bridging block. The silver-allow pieces on the contact bars are machined flat and the silver-allow pieces on the ends of the bridging block are rounded slightly to obtain line contact. The main current-carrying contacts open first and the current is transferred to the arcing contacts which open last. In closing, the arcing contacts make first and the main current-carrying contacts last.

With the breaker open, the arcing contacts should be separated by a gap of one inch minimum. With the arcing contacts on one pole just touching, the maximum gap on the other two poles should not exceed 1/32 inch. With the arcing contacts just touching, the gap at the main current-carrying contacts should be 3/16 inch minimum and 3/8 inch maximum on the top, and 1/8 inch minimum and 5/16 inch maximum on the bottom. During the closing operation the crossbar and contact support should continue to move a minimum of 3/32 inch toward the closed position after the main contacts touch. This compresses the heavy springs behind the main bridging contact blocks to give the required contact pressure.

The contact surfaces should always be kept clean and smooth. After heavy short circuits they should be carefully inspected and, if necessary, any rough or high spots should be removed. Use a fine, clean file and wipe with a clean, dry cloth. When filing contacts remove the high spots only, do not file to the bottom of deep pits. Care should be taken to maintain a line contact as much as possible. To check the amount of contact obtained, take contact impressions by holding, between the contacts, a piece of thin carbon paper with tissue paper on the carbon side and closing the breaker. Open the breaker and examine the impressions on the paper. Good contact is indicated if a well defined impression shows for 75 percent or more of the length of the contact. Good contact is also indicated if a 0.001 inch feeler gage cannot be inserted between the main silver contacts for more than 25 percent of the length of the contact.

The movable arcing contacts are held in place by high-strength hexagon-head screws which are locked in position with locking plates (see Figure 6 and 7). When replacing the arcing contacts make sure that all screws are tight and that the locking plates are bent back around the screw heads.

The main current-carrying contacts have adequate capacity to carry full-load current even if the full line contact has been somewhat reduced, and replacement under normal circumstances is unnecessary. However, if it should be necessary to remove a main bridging contact, the following procedure is suggested (see Figure 6):

1. Remove the barriers and arc quenchers.

2. Close the breaker

3. Block the breaker in the closed position to prevent accidental tripping. This can be done by wedging a block of wood between the cross head and the trip mechanism frame.

4. Remove the two stop screws with lock washers on the sides of the contact bridging member.

5. Remove the blocking and trip the protector open.

6. The contact bridging member can now be lifted out.

7. To replace the contact, reverse the above procedure.

C. Contact Construction for the 2000 through 3500 Ampere Protectors

Each breaker pole has a movable-contact unit assembly consisting of several individually sprung bridging members in parallel. The bottom ends of these bridging members pivot around a bearing block welded to the lower main contact bar. Contact surfaces should be lubricated at the joint where they pivot on the bearing block welded to the lower main contact bar. The parts are silver plated and separate springs hold the bridging members in fixed-line contact with the bearing block. Contact buttons brazed to the top of the bridging members make point contact with other contacts brazed to the upper main contact bar. All these top contacts are low-resistance silver alloy and each bridge carries its share of the total current. Each pole-unit assembly is arranged such that one silver-alloy contact (the arcing contact) makes first and breaks last, and two silver-alloy contacts (intermediate contacts) make and break second. The remainder of the bridging members have silver-alloy contacts (main contacts) and these contacts make last and break first. There are four silver-allow contacts in the 2000 through 3500 ampere assembly.

With the breaker open, the arcing contacts should be separated by a gap of 1-1/16 inches minimum. With the arcing contacts on one pole just touching, the maximum gap on the other two poles should not exceed 1/32 inch. With the arcing contacts just touching, the gap at the intermediate contacts should be 7/32 inch minimum and 9/32 inch maximum. With the intermediate contacts just touching, the gap at the main contacts should be 3/32 inch minimum and 5/32 inch maximum. During a closing operation the crossbar and contact support should continue to move a minimum of 3/32 inch toward the closed position after the main contacts touch. This compresses the contact springs to give the required contact pressure.

The surface of the contact buttons should be kept clean and smooth. Any pronounced rough or high spots resulting from a heavy short circuit should be removed by filing with a fine, clean file. After filing, wipe with a clean, dry cloth. When filing contacts, remove the high spots only, do not file to the bottom of deep pits.

The movable arcing contacts are held in place by high-strength hexagon-head screws which are locked in position with locking plates, (see Figure 6 and 7). When replacing the arcing

contacts make sure that all screws are tight and that the locking plates are bent back around the screw heads.

Replacement of the bridging contact members under normal circumstances should be unnecessary. However, if required, the following procedure is suggested (see Figure 7):

1. Remove the barriers and arc quenchers.
2. Close the breaker.
3. Block the breaker in the closed position to prevent accidental tripping. This can be done by wedging a block of wood between the cross head and the trip mechanism frame.
4. Remove the cam locking screws.
5. Remove the blocking and trip the protector open.
6. Remove the cotter pins and push out pivot pin "A".
7. Disconnect the small flexible connection at the bottom end of the arcing-contact bridging member.
8. Loosen pivot screws "B" and the entire contact assembly can be lifted out as a unit.
9. To replace the contact assembly, reverse the above procedure

D. Assembly of 2000 through 3500 Ampere Contact Head

Refer to Figure 8

1. Stack contacts and insulation with a 3/8 inch diameter pin in the location of Pin "A". This temporary pin should have a length less than the inside dimension of the contact carriage.
2. Assemble into carriage with Pin "B" and "C" using a 0.5 inch diameter rod in Pin "D" location.
3. Place assembly in a vise to clamp he surfaces indicated by "X".
4. Compress springs until Pin "A" can be used to push out the temporary 3/8 inch diameter pin.
5. Removal of Pin "D" makes unit ready for assembly into protector unit. Be sure and lubricate contact surfaces at the point where they pivot on bearing block welded to the lower main contact bar.

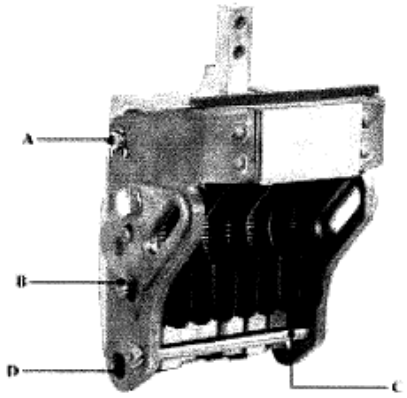

Figure 8 – Contact Head

Refer to Figure 9

1. The contact head is assembled to the cross bar with Pin "E" and to the stationary copper, hinge contact with pivot 6144209.

2. Add locking plate.

3. Force locking plate against Pin "B" with some suitable lever in contact with Pin "A" to establish spring pressure for the hinge contact.

4. Line up hole for 5/16 inch – 18 hexagonal screw with screw driver in slot used for Pin "E".

5. A 5/16 inch – 18 hexagonal screw and locking plate are required on each side.

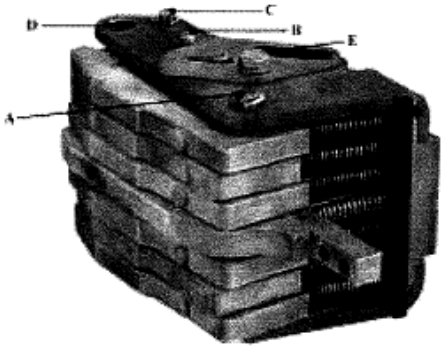

Figure 9 – Contact Head

E. Current Transformers

One current transformer, for use with the network relay, surrounds and is mounted on each pole of the breaker unit. Each current transformer has two windings; the phasing winding which is energized when the breaker contacts are open by the voltage across the breaker contacts and a secondary winding which is connected to the network relay current coils.

Current transformers are mounted directly on the main bus copper and may be removed by moving the protector unit forward, disconnecting the wiring at the current transformer coil terminals and removing the screws fastening the mounting brackets to the buses. When replacing current transformers, care should be exercised to insure that they are placed on the bus with the polarity mark H1 facing the network distribution transformer terminals. Also be sure that all connections are in exact accordance with original connections as designated on the wiring diagram for the particular protector involved.

F. Auxiliary Switch

Immediately below and to the right of the main breaker crosshead is mounted a unit assembly of auxiliary switches, which are operated by a rack and gear connected to the crosshead. These switches open and close the necessary control circuits as a function of breaker contact position.

After approximately every 5000 operations of the protector, the auxiliary switch contacts should be examined, and, if found to be pitted, they should be dressed with a fine file. It is not necessary to remove contacts to dress them, however, if necessary the movable contacts of this switch can easily be removed. Remove the stud above the wire connection. With the contact open, push it towards the stationary contact and lift up. The contact will lift out and can be repaired or replaced. This operation can be done with the auxiliary switch in position on the breaker unit.

The complete auxiliary switch assembly may be removed by disconnecting the driving link, and the control leads, and removing the two screws holding the mounting bracket to the breaker frame. The disassembly of the auxiliary switches is not recommended due to the many operating cams arranged in positions easily disturbed when dismantled.

After an auxiliary switch has been installed on the breaker unit, connect the rack and gear to crosshead, (see Figure 11). Manually operate breaker to insure proper operation before wiring. Removing screw "A" and slide will permit guide to drop down, so that rack can be raised to provide a close adjustment on gear for the following sequence of operation. Operate breaker manually. Contacts 1, 2, 3, and 9 should close when the arcing tips have between 3/16 inch and 1/16 inch gap. If contacts 1, 3 and 9 should operate oppositely, then rotate the gear approximately 180 degrees, so that these contacts will be positively closed at the same time in the above mentioned sequence. If the proper sequence cannot be obtained, the internal cams have been incorrectly assembled and the auxiliary switch must be removed and the cams relocated. After the auxiliary switch contacts have been properly adjusted, the

wired should be connected to their respective locations, circuits checked, and the protector electrically operated to make sure all circuits are completed by the auxiliary switch.

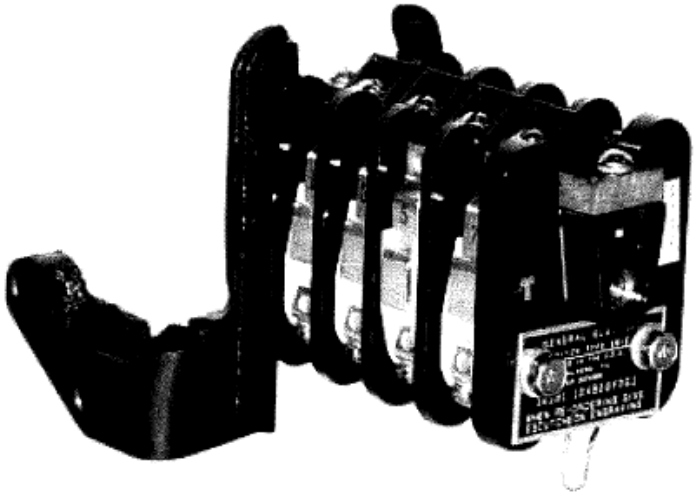

Figure 10 - Auxiliary Switch

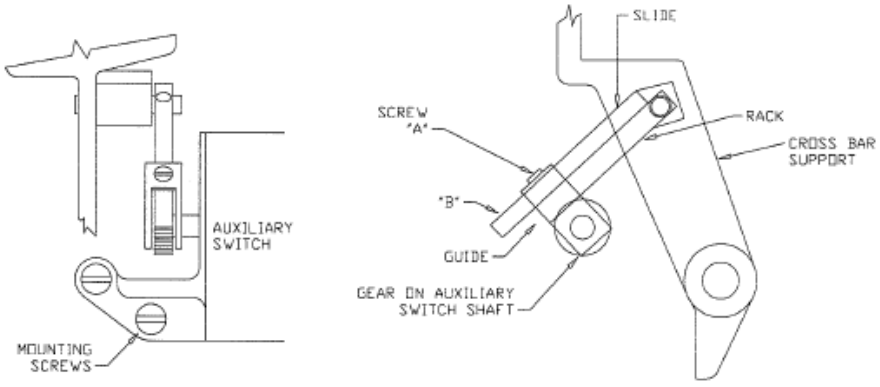

Figure 11 – Rack and Gear Mechanism

G. Mechanical Indicator

The protector is equipped with a mechanical indicator to tell whether the protector is "open" or "closed". This mechanical indicator is operated by a linkage directly connected to the breaker crosshead. It exposes either the word "OPEN" or the word "CLOSED", depending on the position of the breaker contacts. Provision is made for adjustment of the length of the operating link.

H. Operating Mechanism

The mechanism for closing the breaker of the 137NP network protectors is of the gear-driven cam, motor operated type. (see Figure 5). The operating motor is mounted on the worm and gear housing to the left of the closing linkage. The motor drives the worm through a torque brake which permits free running of the motor while torque is being transmitted from the motor to the worm, and serves to stop the motor's rotation immediately when the motor is de-energized. The brake assembly serves as a coupling between the motor and worm shaft and is mounted on the lower end of the motor shaft in the upper part of the gear housing.

Sequence of Operation

The sequence of operation of the 137NP network protectors may be best explained by consideration of the simplified control diagram by Figure 12.

Assume that the breaker is open. The sequence on closure is as follows:

1. When the proper voltage conditions exist the relay will close its "closing contacts.
2. This action will energize the coil of the motor control device through the "b" and "c" switches (assuming that the manually operated handle is in the automatic position).
3. The motor device will then close its contacts and energize the operating motor.
4. As the breaker closes, two small cams on the main closing cam shaft will mechanically open the two contacts independently and the torque brake will stop its rotation.

If, when the protector closed, a primary feeder fault, or other conditions should occur which would cause sufficient power reversal to operate the network relay, tripping of the protector will occur as follows:

1. The network relay will close its tripping contacts, thus completing a circuit through the trip coil and series "a" switch.
2. The trip coil armature will then pick up (if the impressed voltage is 7-1/2 percent of normal or over) and release the trip mechanism latch, allowing the breaker to open.

3. When this occurs, the "a" switch will open, de-energizing the trip coil, and the "b" switch will close, restoring the protector to its initial state.

When the breaker is closed or open, an "a" or "b" switch will indicate the breaker position for customer use. If the manual operating handle is moved to the "open" position, the "c" switch will open the closing circuit to prevent closure of the protector.

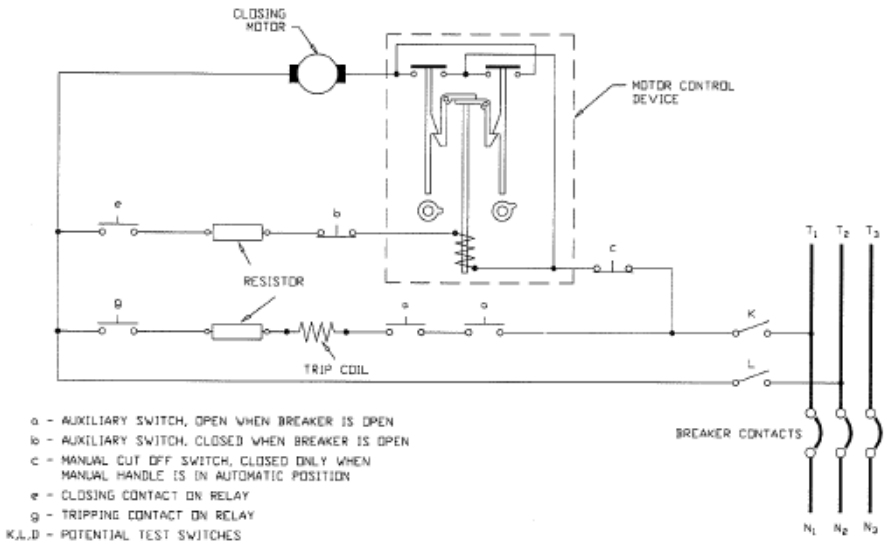

Figure 12 – Simplified Control Circuit

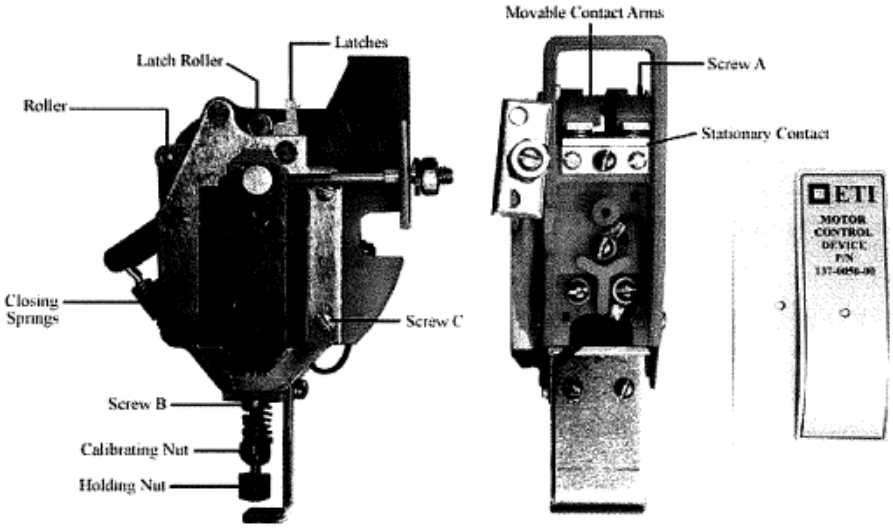

Figure 13 – Motor Control Device

I. Motor Control Device

The motor control device is mounted in the lower left-hand side of the closing mechanism assembly (see Figure 2). This device (see Figure 13) performs the necessary functions of energizing the motor when the closing contacts on the relays close, and of de-energizing the 0motor after the breaker is completely closed. The device consists essentially of two contacts connected in parallel, an individual latch for latching each contact in the open position, a coil and plunger for releasing both contact latches when energized, and a lever arrangement whereby two small cams on the main closing cam shaft will mechanically open the contacts independently. These two small cams for opening the contacts are staggered on the shaft such that either one or the other contact is always free to close. The location of these cams on the shaft is such that the second contact is not opened until after the breaker is latched in the closed position. Before either contact is opened during a closing operation the "b" switch has opened and has de-energized the coil of the control device.

This device should be adjusted to pick up electrically as approximately 80 percent of the normal motor circuit voltage (see **INSPECTION AND TESTING**). This must be checked with an instantaneously applied voltage. To adjust this pickup, secure holding nut and turn calibrating nut in a clockwise direction to decrease the voltage required to pick up armature. To increase the pickup voltage, reverse the above procedure. The contacts of this device must be latched open when in stalling protector in system.

No adjustment is required other than that necessary to maintain the pickup value desired. The contacts, however, should be examined after every 5000 operations; and, if necessary, dress contacts with a fine file on high spots only, do not file to bottom of pits.

Occasional renewal of contacts may be necessary. The stationary contact may be removed and replaced by removing the two screws located on front of contact. When replacing the movable contacts, remove screws "a" located on top and screw holding flexible connection to contact. When installing new contact make sure that all screws are tight and contact is lined up.

To replace coil, the motor control device must be removed from the breaker unit and wires disconnected. Disconnect coil leads from their terminals. Remove screws "b" (see Figure 13) and drop armature taking care not to misplace washer located on top of armature. Remove the tube and pole piece. The coil may now be removed from right side of device. To install, reverse the above procedure.

An adjustment has been provided which permits the position of the motor control device to be varied, thus controlling the point at which the motor is de-energized (see Figure 13). An adjusting screw fastened to the mechanism frame will advance the motor cutoff point if turned counterclockwise. If turned clockwise, the motor cutoff point is retarded. Before this adjustment can be changed, the lock screw of the device and the lock nut on the adjusting screw must be loosened. This adjustment will control the opening movement of the control device contacts. The contacts must open far enough to be latched in the open position, but must not open so far that they touch the upper member of the control device frame.

J. Trip Mechanism

The trip mechanism in use on 137NP network protectors is self-resetting (see Figure 14A, B, C). Rotation of the latch shaft permits the latch to rotate about its pivot, releasing the latch roller and allowing the breaker toggle linkage to collapse. Both the breaker mechanism and the trip mechanism reset through the action of resetting springs. In order for the latch to reset properly, the breaker mechanism must reset before the trip mechanism. For this reason, the holding cam on the latch roller link holds the latch out of the reset position as shown in Figure 14B until the breaker mechanism is fully reset. Resetting of this trip mechanism is positive and no adjustments are required.

The trip coil should cause the breaker to be tripped open when any voltage from approximately 7-1/2 to 106 percent is applied to the tripping circuit.

1. Mechanism Adjustment

    a. Checking operation for resetting after trip-free operation.

It is essential that the breaker mechanism reset properly not only when tripped from the fully closed position but also after trip-free operation. Resetting of the latches after trip-free operation should be checked by the following method.

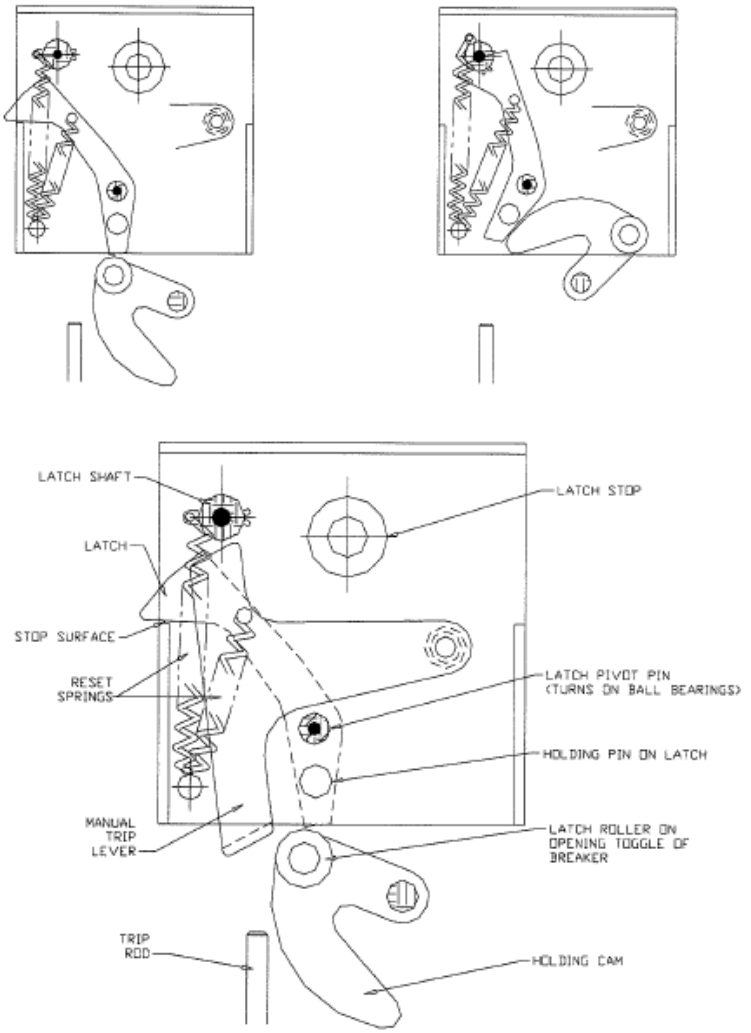

Figures 14A, B, C – Trip Mechanism

With the operating handle in the automatic position hold up the hand-trip finger (see Figure 15) such that the secondary latch is disengaged. Then energize the motor closing circuit at 230 volts (106 percent) and after two or three trip-free operations release the hand-trip finger. On the next operation the secondary latch should engage the latch shaft and the motor mechanism should then close the breaker and stop.

Should the above check show that the latch is not resetting properly, the following possible sources of trouble should be investigated.

i. The motor closing cam may be in such a position that the lower roller on the bell crank strikes it before resetting. If such is found to be the case, turn the motor by hand until the cam goes past the roller and the bell crank drops into the reset position. The motor closing cam could get into such a position to prevent resetting either by excessive slipping of the motor brake or because of partial rotation of said cam be turning the motor by hand.

ii. There may be a bind in the main closing mechanism which prevents the bell crank from dropping into the reset position. This could be caused by dirt or other foreign material getting into the mechanism, or by incorrect assembly if for any reason the breaker has been taken apart.

iii. The torsion spring on the main latching toggle may not be turning the main latch arm back into the reset position. This again could be caused by binding or excessive friction resulting from dirt or other foreign material, or by incorrect assembly if for any reason the mechanism has been taken apart.

b. Adjustment of Tripping Solenoid

Automatic tripping of the breaker is accomplished by energization of the coil of the tripping solenoid which is mounted on the right-hand side of the trip mechanism. The plunger of this solenoid strikes an arm on the secondary latch shaft, thereby rotating the shaft and freeing the latch. There should be sufficient over travel of the trip plunger to insure position tripping at all times. To check this over travel, first loosen the locking nut (see Figure 15) on the latch adjustment screw and turn the screw down until it just trips the breaker. Then pick up the trip plunger by hand and measure the travel of this plunger between the point where it strikes the latch arm and the point where it can be raised no higher. This over travel should be approximately 1/16 to 3/32 inch. If the over travel is less than this the latch arm should be bent down to obtain the proper over travel. **After checking the over travel of the trip plunger, the latch adjustment screw must be reset.** To do this turn the screw down until it just trips the breaker and then back it off 1-3/4 minimum to 2 full turns. Lock the screw in this position with the locking nut.

Protectors have been carefully adjusted in the factory for low voltage tripping limits, and it should not be necessary to make any readjustments.

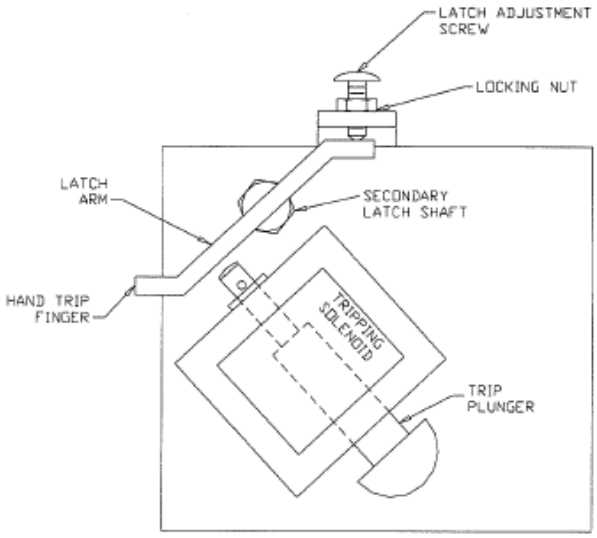

Figure 15 – Trip Solenoid

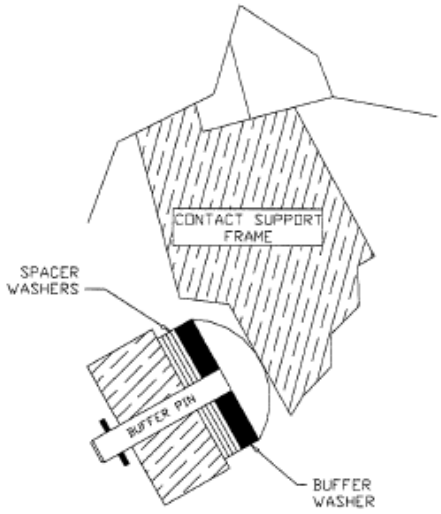

Figure 16 – Buffer Assembly

c. Replacement of Buffer Washers

The shock of the breaker opening is deadened by two buffer stops, one on either side of the mechanism assembly. The buffer washer used on these stops are made of a material which combines the necessary shock-absorbing qualities with long life and durability, and they should be replaced only by similar washers of the same material obtained from the factory. These buffer washers are 1/8 inch thick when new. If, after continued use, the thickness becomes less than 1/16 inch, they should be replaced with new ones. To replace the buffer washers proceed as follows:

Refer to Figure 16.

Close the protector and tie the latch, or block crosshead so that it cannot be tripped accidentally. Remove the cotter pins which hold the buffer pins in place and then remove the buffer pins. Replace the buffer washers with new ones and reassemble in the protector. Before putting the cotter pins back, trip the protector and check to see that the contact supporting frame strikes both buffer pins simultaneously. If not, add or remove spacer washers under the heads of the buffer pins until it does. The adjustment is correct when the following conditions exist.

When the breaker open and the contact supporting frame resting on the buffer stops, the trip resetting plunger should be bearing on the reset cam and holding the secondary latch in the reset position. When in this position the trip resetting plunger should be just starting to compress its spring and move relative to the crosshead frame. In no case should the spring behind the trip-resetting plunger be compressed solid.

The complete trip mechanism may be removed as a unit by disconnecting the trip coil leads, and removing the four screws holding the trip mechanism frame to the main mechanism frame. The trip mechanism may then be lifted and removed completely. **CAUTION: The breaker must be in the "open" position before the trip mechanism is unbolted from the mechanism.**

K. Operating Motor

The operating motor is of the totally enclosed, universal ball-bearing type which requires minimum maintenance. The motor should be inspected and cleaned periodically to insure perfect operation. This can best be accomplished by removing the motor from the protector, removing small hand wheel from the end of motor shaft by loosening the screws, removing the brushes located on side of motor frame and removing the two studs holding the motor frames together. This will permit complete dismantling of the motor for reconditioning and inspection.

The motor is rated for intermittent service, and reasonable care should be exercised when testing network protectors to avoid overheating of the motor by repeated operation.

Operating motors may be removed by disconnecting the leads from the terminals provided, removing the three bolts holding the motor to the gear housing, and lifting the motor vertically.

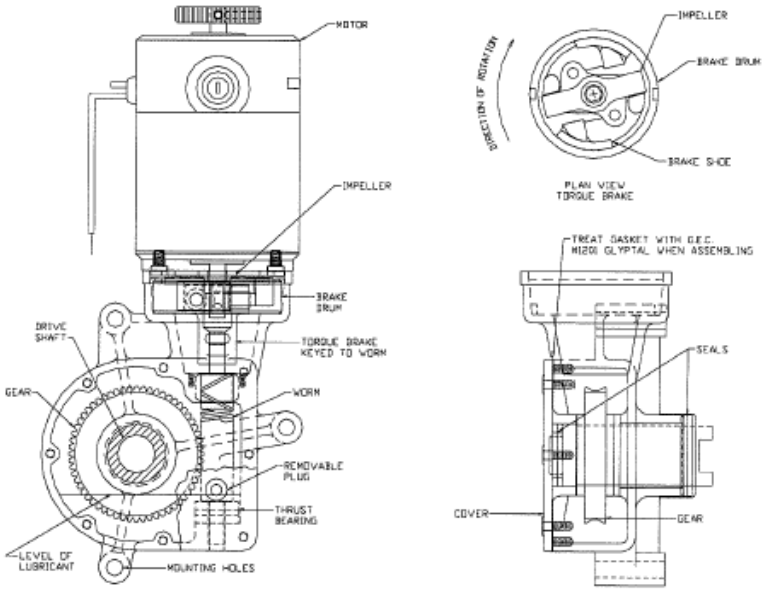

Figure 17 – Motor, Torque Brake and Gear Reducer

L. Torque Brake

The torque brake (see Figure 17) applied between the motor and the gear reducer unit serves as a coupling and controls the over travel of the motor closing cam when the motor is de-energized. This torque brake assembly consists of three units; (1) brake assembly keyed to gear reducer, (2) impeller keyed to motor shaft, and (3) brake drum keyed in the gear housing. When the motor is energized, the impeller releases brake shoe from the brake drum and transmits torque directly to the gear reducer. When the motor is de-energized, the motor torque on the impeller is released permitting the brake shoe to engage on brake drum and stop the mechanism.

The torque brake does not require adjustment other than an occasional inspection to insure that no oil or grease is present on the brake shoes or drum surfaces. When replacing brake be sure that the brake drum is in position. Before replacing motor make sure that impeller is

properly located on brake (see Figure 17) and spacing washers when used between the impeller and motor, should be replaced. Rotate hand wheel on motor to insure that no binding is present before operating.

M. Gear Assembly

The worm and gear are enclosed in a housing to form a unit assembly which is mounted to the side of the mechanism frame casting by three bolts.

The complete gear assembly, either with the motor removed or attached, can be removed by removing the three bolts holding the gear casing to the side of the mechanism frame and sliding the assembly off the end of the manual operating shaft.

N. Manual Operation

Manual operation of the breaker unit of the 137NP protectors is provided through a shaft concentric with the worm wheel and main closing cam shaft. This shaft carries a cam which is similar to the main closing cam and acts against the closing bell crank in the same manner to close the breaker, and is arranged to operate a push rod which lifts the primary latch to trip the breaker open.

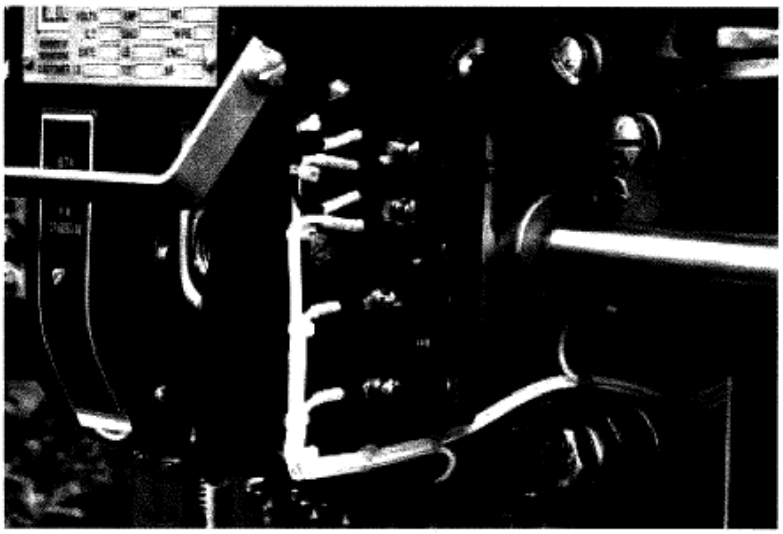

Figure 18 – Manual Cut Off Switch

O. Manual Cutoff Switch

The manual cutoff switch (see Figure 18), located on the right side of mechanism and actuated by a cam on manual operating shaft, opens the "closing" circuit when the manual handle is rotated to the "open" or "closed" position, thus preventing the protector from attempting to reclose with the handle in either of these positions. When the handle is rotated to the "closed" position, the breaker will be closed but will trip free from the manual handle if the trip coil is energized or the trip latch is released. When the handle is in the "automatic" position, the protector will perform its normal automatic functions.

The contacts of this switch should be examined periodically. If necessary, dress contacts with a fine file in high spots only, do not file to bottom of pits

P. Closing Linkage

The main closing linkage is contained in the main mechanism frame.

The complete operating mechanism can be removed from the breaker by disconnecting the control leads, and removing the two bolts on each side of the main mechanism frame, which hold this frame to the breaker frame. This operation may be performed either with the motor, gear assembly and trip mechanism in place, or with any of these parts removed.

CAUTION: Breaker must first be open.

VI. THE ENCLOSURE

The 137NP network protector (see page iii) is provided with a submersible enclosure. All cases are provided with a cover which may be hinged from either side and an external manual operating handle which should always be mounted on the side opposite the cover hinges so as to be accessible when the cover is open. If the enclosure is opened before the protector is mounted in its final location, be sure to secure the top of the enclosure to a solid support to prevent the protector from tipping forward when the unit is rolled forward.

The cover is provided with a gasket for making a watertight joint with the case. Gasket and case surfaces should be cleaned to insure a tight joint. Before closing the cover, it is advisable to cover the gasket surfaces with a thorough coating of flaked graphite or water pump grease for cork and flaked graphite or talc for Corprene. On quick opening boxes with rubber gaskets use talc. This procedure should be followed each time the cover is closed. The cover should be clamped against the case with the clamping arrangement provided by tightening the bolts gradually to insure an even distribution of pressure on the gasket.

All pipe thread fittings including pipe plugs, inspection window holders and pressure test valves, if removed, should be replaced by applying Glyptal or white lead to threads to insure a tight joint. All wiping sleeve cable bushing nuts, before being replaces, should be coated with a mixture of graphite and oil so that they can be removed or tightened easily.

After sealing the enclosure, all submersible protectors should be given an air pressure test. Any satisfactory air or nitrogen testing equipment may be used. Inflate the case with gas to not more than six pounds per square inch leave the pressure in the case for 24 hours. The pressure drop should not be more than two pounds. If it is, investigate for leaks; leaks may be found by painting the protector case with a thick solution of Ivory soap, glycerin and water.

The protector cases should be kept well painted in order to prevent corrosion. Particular attention should be taken to repaint any places where the paint may be marred or scratched off during or subsequent to installation. Recommendations for paint to be used will be furnished upon request.

A. Cover Gasket Replacement

1. Multi-bolt Enclosure

When replacing the gasket on the enclosure, remove the old gasket completely and clean flanges of all foreign material to insure a good bond when cementing new basket in position. When gaskets are ordered as a supply part, complete installation instructions, together with an approved cement, will be shipped with the material.

2. Quick Opening Enclosure

a. Remove cover from box. For flat-spring-type hinge remove four screws which secure hinge to front of cover. On boxes with sliding bolt-type hinge, remove cover by removing cotter pins and washers which hold cover to hinge bolt.

b. Place cover in horizontal position with inside of cover facing upward.

c. Remove old gasket material and clean all foreign material from gasket retainer.

d. Select proper length gasket as follows:

Protector Description	Gasket Length in Inches
1600 Amp. Transf. Mounted (small box)	133
1600 Amp, Transf. Mounted (large box)	141
1600 Amp, Separate Mounted	139
2000 Amp	159
3000 Amp	162

e. Place gasket in retainer. Start with the gasket ends near the center of one of the long sides of the cover. Place sections of the gasket in retainer as shown in Figure 19. Use wide nose pliers and soft mallet. Lubricating the gasket with hand cream will aid in positioning the gasket. Continue placing the gasket in the retainer. Work towards the gasket joint and be careful not to stretch, twist, or cut the gasket. When in its final position the gasket should be free from waves or tool

marks. Wipe the hand cream from the exposed gasket surface and apply talc to keep the gasket from sticking to the housing.

f. Reassemble cover on the housing by following above procedure in the reverse order.

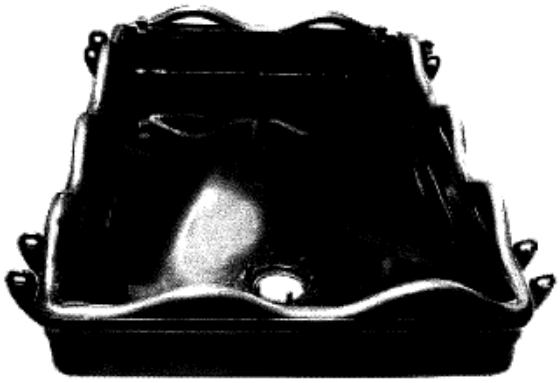

Figure 19 – Door with Gasket

B. Changing Location of Operating Handle

The manual operating handle is usually located on the right side of the enclosure when facing the protector, and will be supplied in this location unless otherwise specified. A bearing is furnished on both sides of the enclosure so that the location of the operating handle can be changed to suit requirements. It is the usual procedure to have the air pressure valve located on the opposite side of the operating handle.

The breaker unit coupling can also be located on either side of the manual shaft on the unit. This coupling is secured to the shaft by means of a taper pin which can be removed. The couplings on the case and breaker unit are so arranged that they will not engage when installing the breaker unit unless the breaker manual shaft and handle on case are in the open position.

When the handle is to be changed to the opposite side proceed as follows. Remove the handle and the indicator from the operating shaft, back out the locking screws in the packing nut, remove the packing nut, remove the coupling from the operating shaft, remove the operating shaft and remove the index plate.

Remove the sealing nut from the bearing on opposite side of the enclosure and assemble to the bearing from which handle has been taken. Assemble the handle to the opposite side of the protector enclosure in opposite sequence to the above.

The pin holding coupling to the operating shaft is shown for right side of the enclosure mounting. When operating handle is mounted on left side of the enclosure the pin is inserted in the hole of the coupling opposite to that shown.

If the packing removed from original bearing is in good condition, assemble in the new bearing making sure that packing nut is drawn against the packing securely for proper pressure seal and that the locking screws are securely fastened to bearing to prevent packing nut from turning.

C. Packing

Packing nut is adjusted at the factory to provide an airtight seal, and further adjustment should not be necessary. If, however, it is found necessary to tighten packing nut, remove the handle and indicator, back out locking screws of packing nut and turn packing nut in clockwise direction to improve airtight seal. If packing nut is tightened to within 1/16 inch from bearing face, additional packing can be added or bearing repacked with recommended packing.

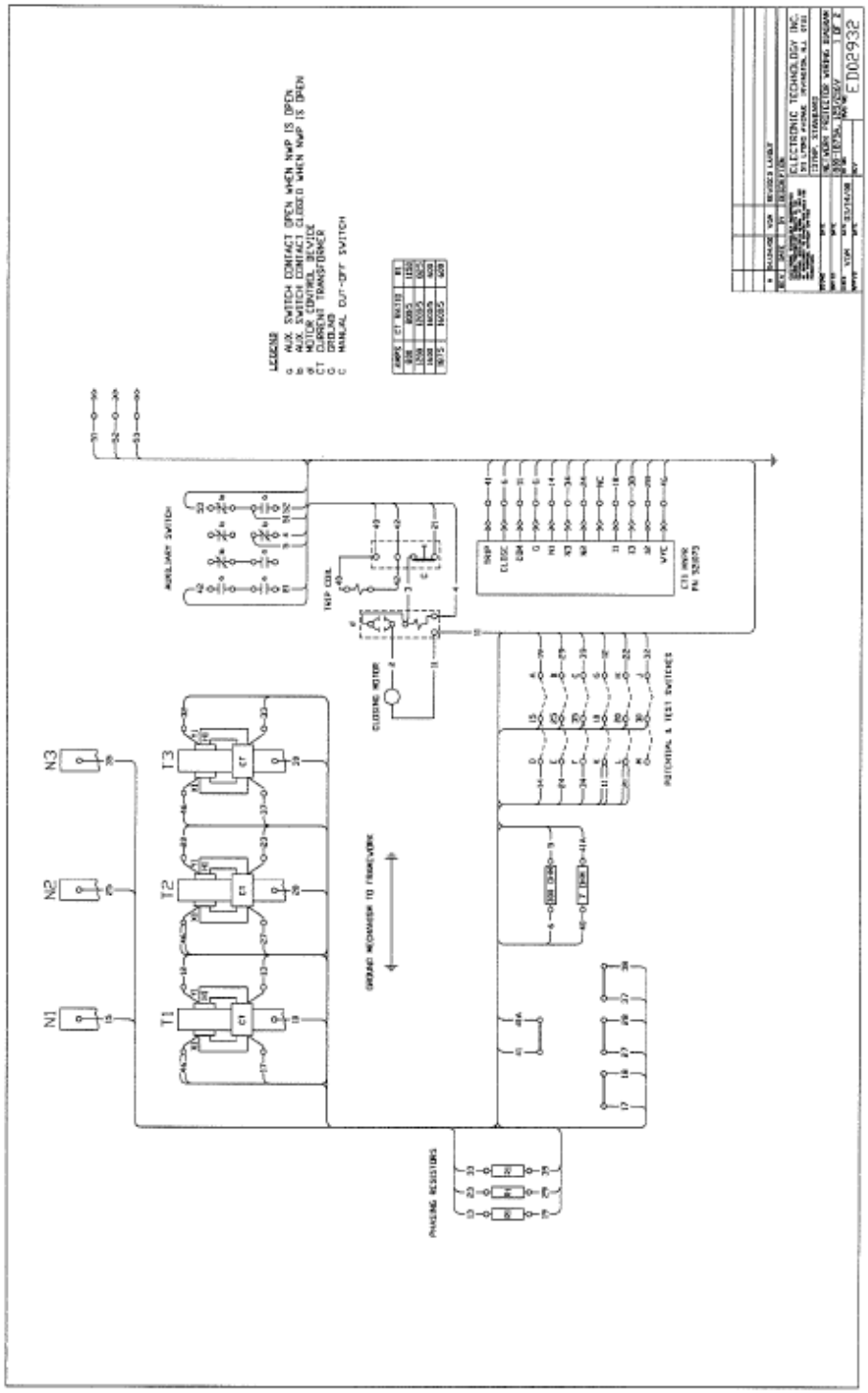

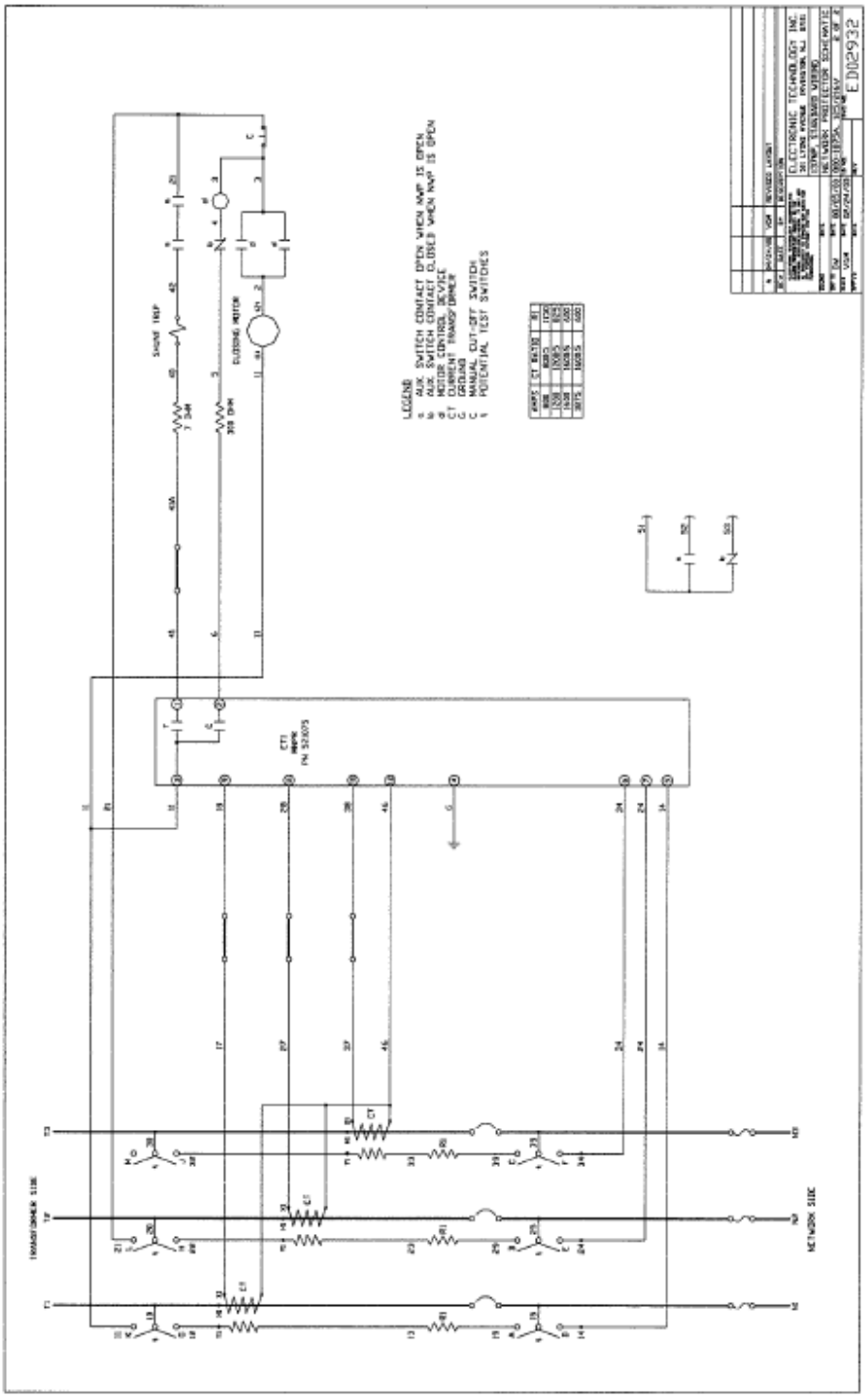

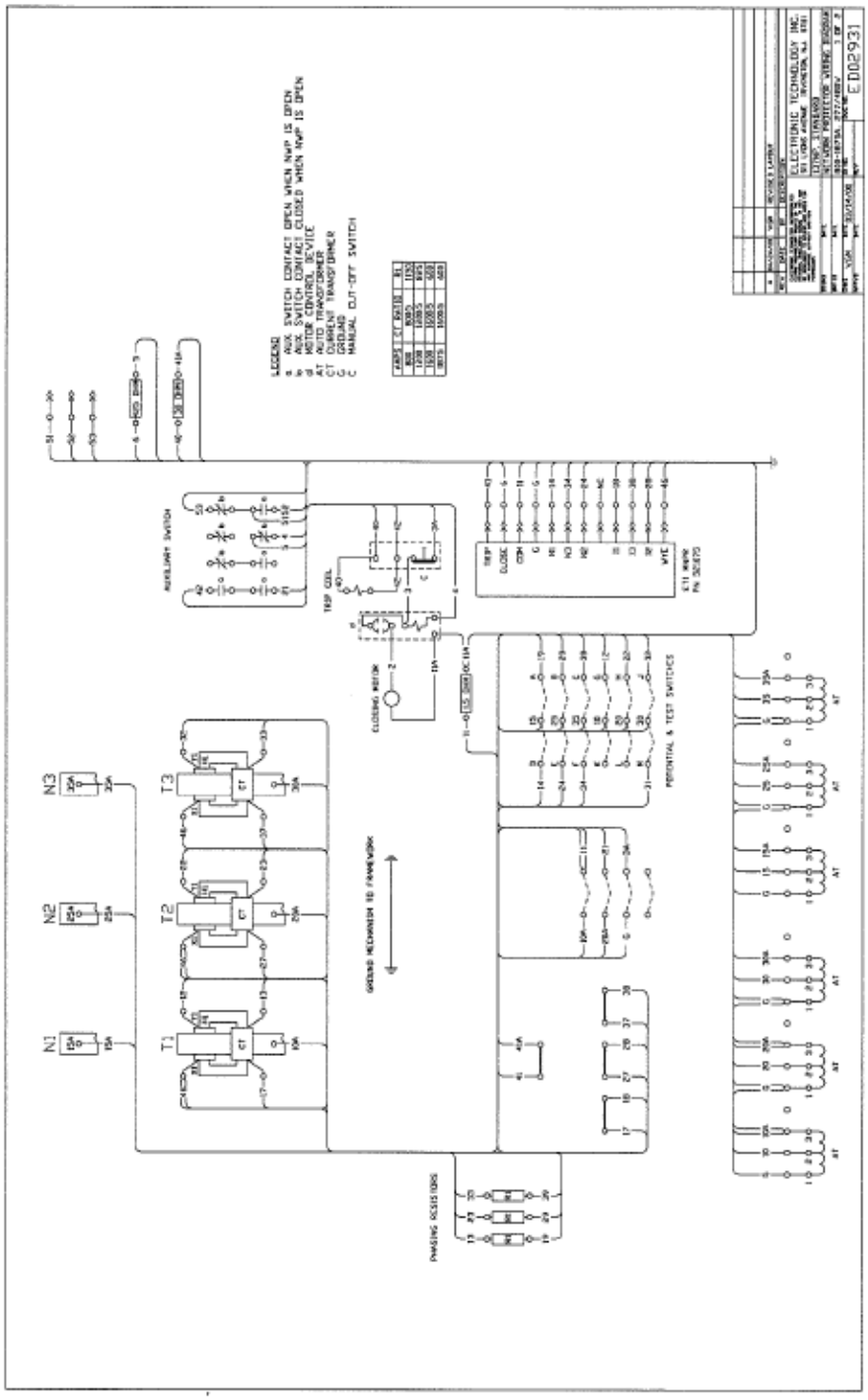

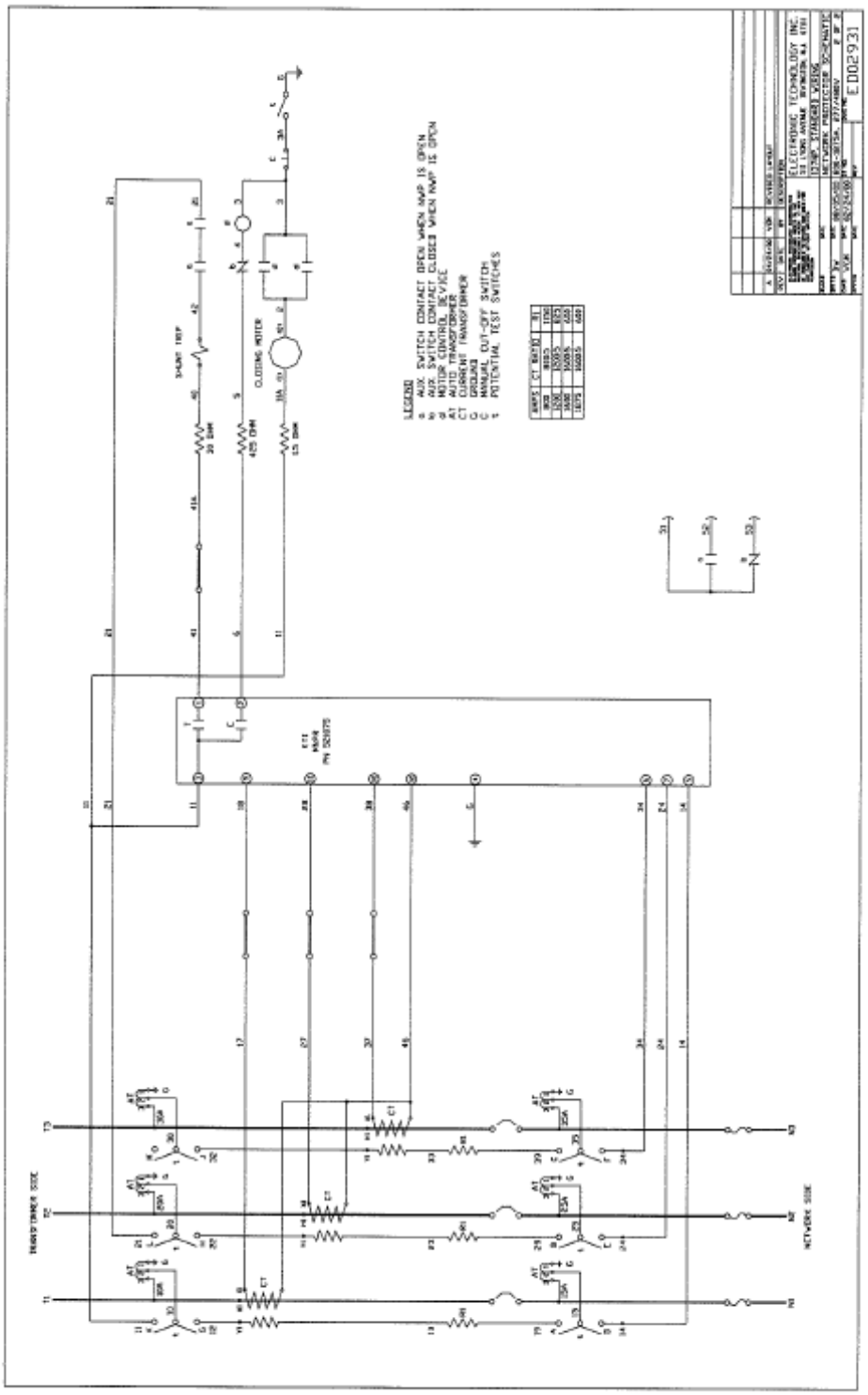

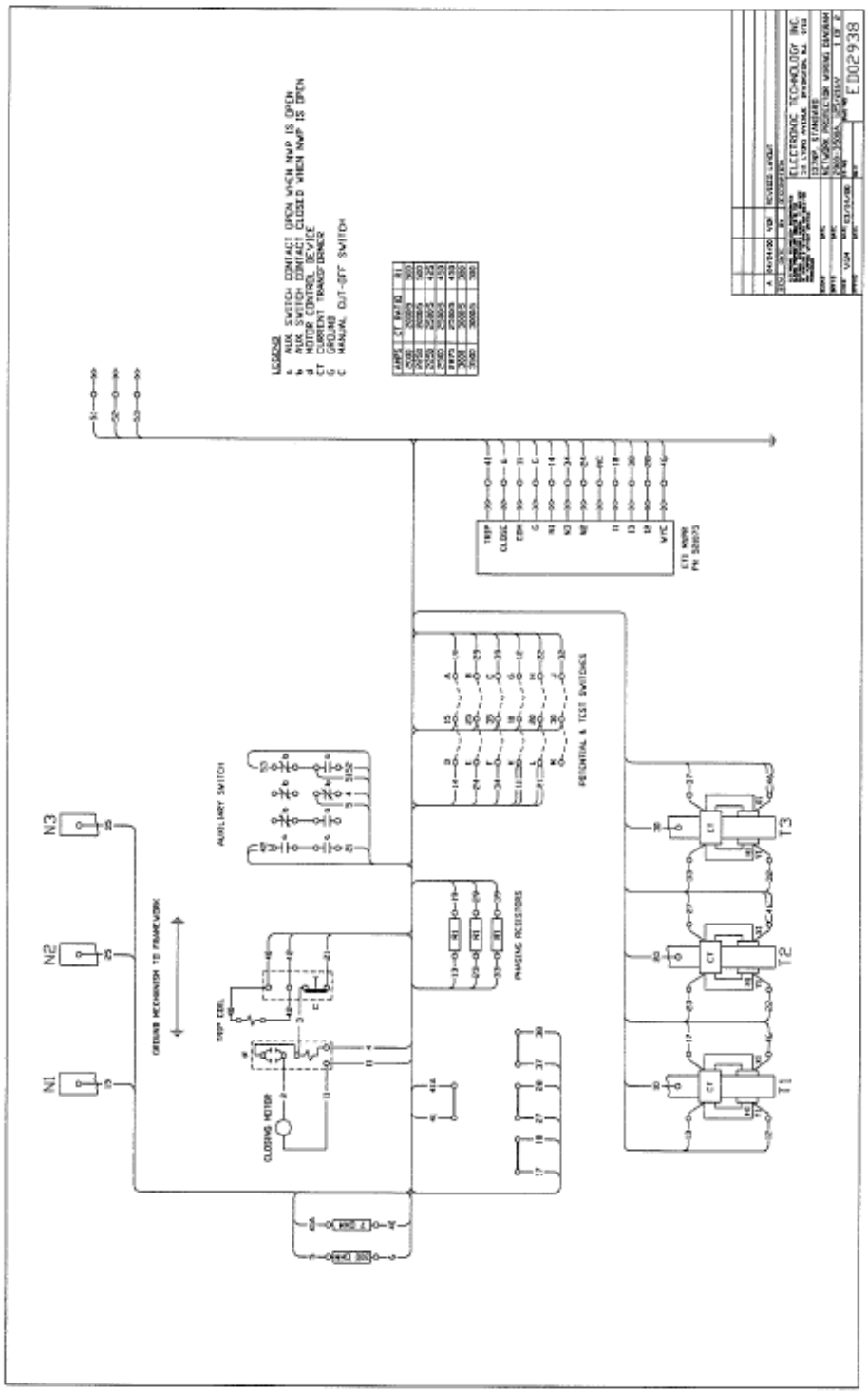

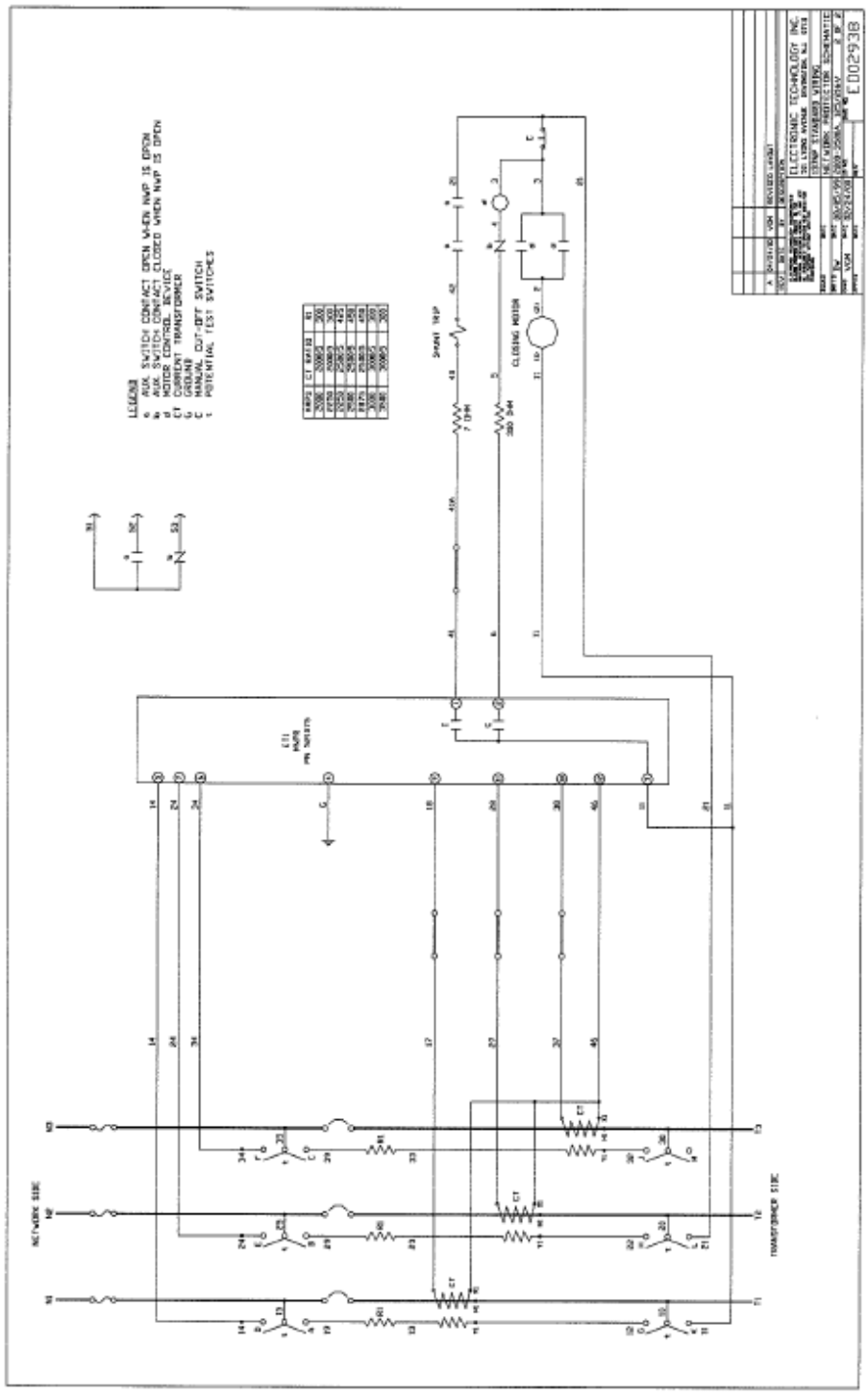

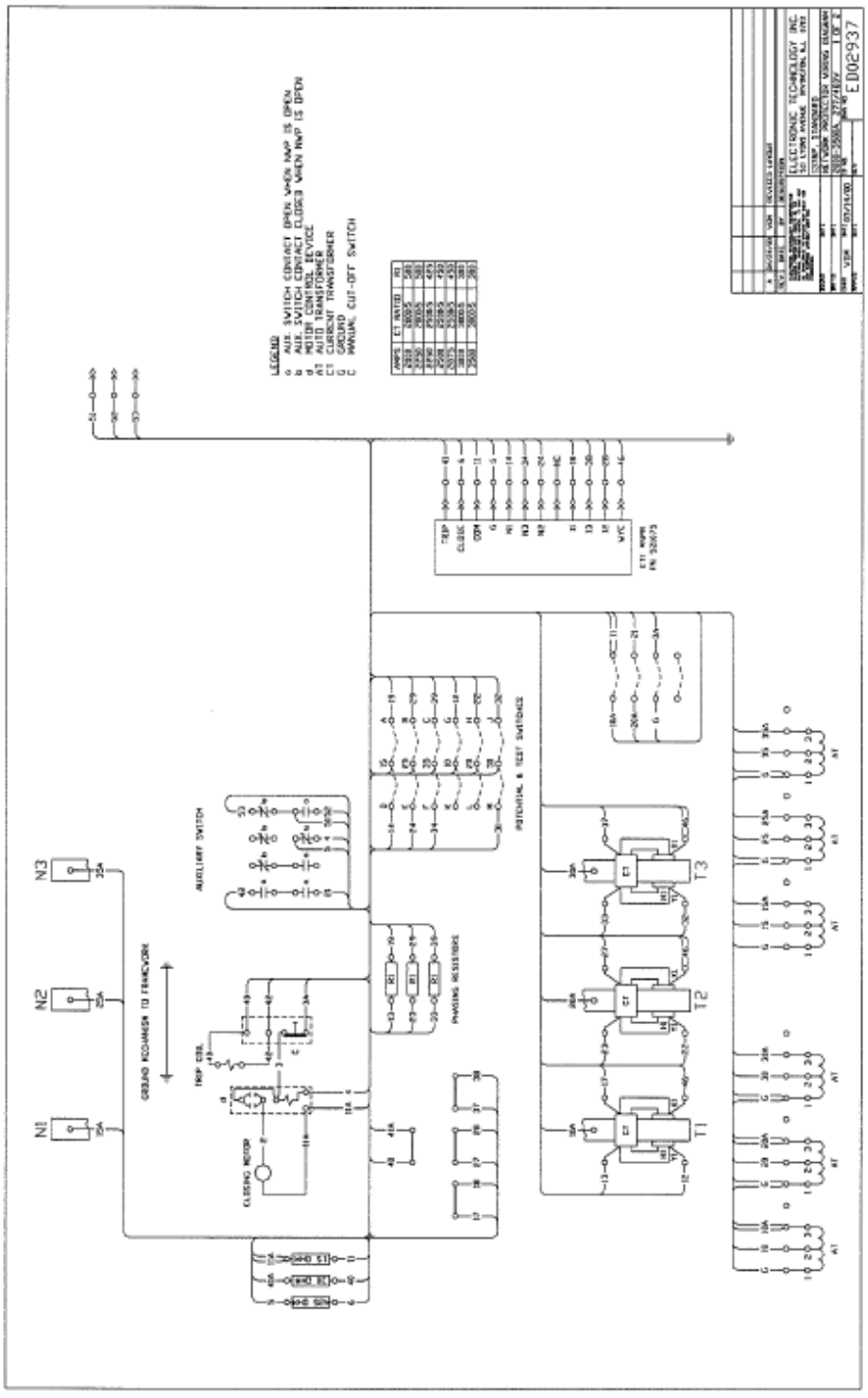

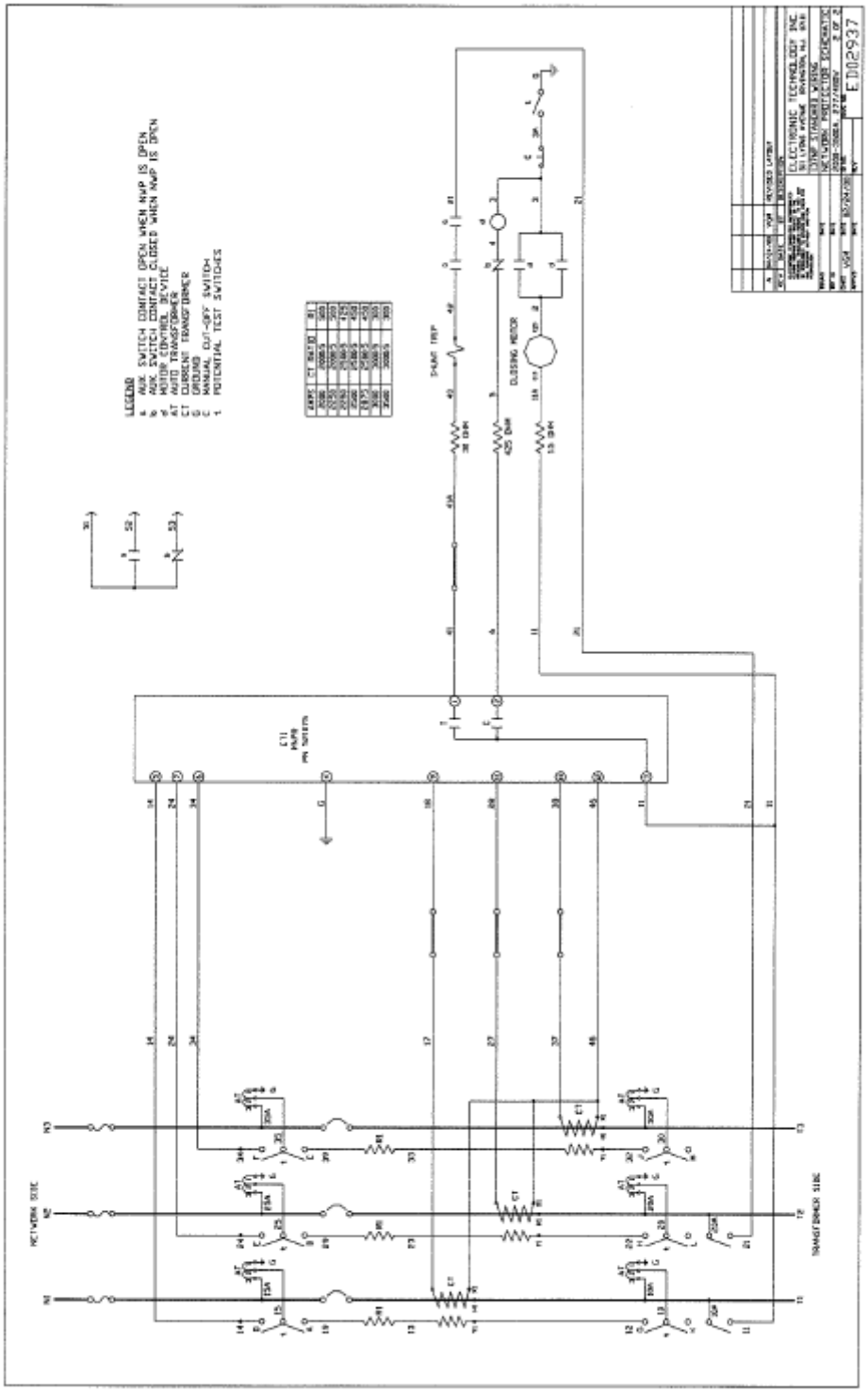

EVERSOURCE MAINTENANCE PROGRAM	Document Number: **6.29D** **Rev. 3** Document Name: **Network Protector CM-22 Major Maintenance**
Owner Name:	John Dipaola-Tromba
SME Name:	C. Cory Morgan
Effective Date:	July 1, 2017

Approvals:

Connecticut:

Name: Anthony A. Anzalone Anthony A. Anzalone
Title: Director – Stations Operations
Date Signed: **06-26-2017**

Name: Jennifer A. Schilling _____
Title: Director – Strategy & Performance
Date Signed:

New Hampshire:

Name: James C. Eilenberger James C. Eilenberger
Title: Director –System Engineering
Date Signed: **06-26-2017**

Massachusetts:

Name: Paul R. Renaud Paul R. Renaud
Title: Vice President – Engineering
Date Signed: **06-27-2017**

Ensure you are using the current revision by verifying it against the controlled electronic copy located on the Distribution Engineering Standards Bookshelf or the Regulated Businesses Policies and Procedures Lotus Notes Database.

CM-22 Network Protectors – Major Maintenance

CAUTION

No modifications to network protectors shall be made, either temporary or permanent, without prior approval of the Distribution Engineering Department.

Stop the job, place equipment in a safe condition, and contact Supervision if the process does not proceed as expected, if unusual situations occur during the performance of the process, or any significant problems occur during maintenance activities.

Before You Begin

Prior to assigning work on network protectors, Supervision shall:

1. The Supervision shall, prior to assigning personnel to perform “Work” on a network protector, ENSURE the person(s) responsible for performing the “Work” is fully qualified in accordance with operating company requirements
2. The Supervision shall, ensure that all employees are properly trained and qualified to perform this work, and that all appropriate PPE and safety requirements are met, including but not limited to those defined within the following documents:
   - TD 211, “When to Wear FR Clothing”
   - TD 952, “Protection of Personnel Entering Enclosed Spaces” (Connecticut and Western Massachusetts only)
   - TD 955, “Confined Space Requirements”
   - Eversource Employee Safety Manual
   - TD -877 Managing Arch Flash Hazards on CL&P Distribution Facilities (Connecticut ONLY)
3. The Supervision shall, ensure those performing the work are aware that of the following PPE requirements whenever working in Underground Vaults & Manholes:
   - Safety Glasses with side shields
   - EH (Electrical Hazard) rated boots
   - High Voltage gloves
   - FR (flame resistant) clothing, as specified in TD 211
4. Whenever “Work” is performed on a network unit as defined in paragraph 5 of this procedure, the following PPE is required :
   - Protective Arc Flash Hood (Beehive), (Stock Code 507687) or company approved equivalent.
   - Safety glasses with side shields
   - Minimum of low voltage (Class 0) rubber gloves (use of High Voltage Rubber Gloves is preferred)
   - Double layer of full body FR Clothing (i.e., FR shirt and pants plus full body FR coverall)

5. All persons performing “Work” on Network Units as defined below and those persons within the immediate work zone while “Work” is being performed shall wear at minimum double layer full body FR clothing, minimum 25 cal. FR rated hood (beehive type with built-in arc rated face shield), safety glasses and, minimum of low voltage (Class 0) rubber gloves (high voltage rubber gloves preferred). As defined in this document, “Work” includes the following tasks:

   - Installing or removing transformer links and network fuses
   - Rolling or racking out the protector
   - Phasing the unit
   - Connecting test leads to an energized bus
   - Obtaining transformer and network voltages
   - Test probe usage prior to installing links and network fuses
   - Or any other work performed inside the network protector enclosure with the transformer and/or network bus energized

6. Prior to accessing manholes and vaults to investigate, inspect or work on a network unit in a single transformer vault, the maintenance records for that unit will be reviewed for condition of the unit.

   - If the records indicate that a major maintenance was completed within the maintenance cycle per the Eversource Maintenance Manual and the unit has no major deficiencies, work may commence on the network transformer with the unit energized following all applicable company procedures and the protocols. (Applicable only to Connecticut and Western Massachusetts)
   - If the records do not indicate that a major maintenance was completed on the unit within the maintenance cycle per the Eversource Maintenance Manual or major deficiencies have not been addressed, then the primary feed to the unit will be de-energized prior to commencement of maintenance work. The maintenance work on the unit will then take place with the unit de-energized, and only the secondary cables will be energized back from the street grid during the work. This will only apply to single transformer vault units.
   - The deficiencies described below, require the primary circuit to be de-energized in accordance with the operating policy.
     - Major maintenance not performed within the maintenance cycle required by the Eversource Maintenance Manual
     - Low oil level (below sight glass / gauge level) in primary switch or transformer or dielectric quality of oil below acceptable level
     - Any other significant defect or abnormal condition that may affect the safe operation of the network protector or transformer, such as, free standing water in the primary switching or transformer oil sample, excessive damage / corrosion in the network protector or other defect that requires immediate repair to return to service.

7. For cases where multiple network transformers exist in a vault, it will generally not be possible to de-energize all of those units for a variety of reasons. Therefore, prior to working on a network transformer, where multiple network transformers exist in a vault, maintenance records shall be reviewed for major deficiencies and/or major maintenance completion within the maintenance cycle per the Eversource Maintenance Manual prior to working in the vault.
   - If records indicate that major maintenance for all transformers within the vault is up-to-date, and that there are no major deficiencies, then work may proceed.
   - If major deficiencies or major maintenance was not completed, management will jointly work with employees for the appropriate steps to follow.
8. With the exception of the commissioning of a new network unit, 480V/277V network units shall have major maintenance completed with the primary de-energized. 216V/125V network units may be worked on with the primary energized as long as no oil work (i.e. oil sampling, topping off and/or retro-filling) is being performed.
   - Network major maintenance that includes any oil work (i.e. primary equipment oil sampling, topping off or the like) shall only be completed with the primary equipment de-energized
9. Job Setup: Work zones, requirements for various jobs, switching requirements. All arrangements should be completed or setup prior to beginning the job. These include cones, signage, and police or traffic control. Check holes prior to entry for cleaning needs, i.e. pumping water, debris, contaminates, visible oil, and providing samples for lab analysis.
10. Review the manufacturer's manuals for all safety notations (Danger, Warnings, and Cautions), as needed. These may be in sections of the manual other than with the instructions.
11. Supervision shall ensure the assigned workers have primer, paint, and any additional material needed for cleaning and preservation of the exterior of the network protector prior to departing the work center.
12. Prepare the vault for entry.
    a. Check for dangerous atmospheric conditions before entering the vault using company-approved atmospheric sampling equipment
    b. Ventilate the vault, if required, in accordance with the Eversource Employee Safety Manual.
    c. Remove any standing water or debris from the vault in accordance with ENVIROWI-0105 or company-specific requirements, as required. This is located in the Environmental and Facility Procedures section of the Distribution Engineering Standards Bookshelf.

Network Protector Tools

The following fully insulated tools are available and may be useful for Network Protector service:

Tool Description	NU Stock Code
Wrench, Torque, 1/2” drive	572599
Wrench, Socket, extension bar, 1/2” drive, 12” long	572576
Socket size 3/4”, 1/2” drive, 6 pt.	571478
Socket size 9/16”, 1/2” drive, 6 pt.	571477
Wrench, Socket, T Handle, 33” long, 9/16” socket	572573
Wrench, Socket, T Handle, 33” long, 3/4” socket	572574
Wrench, Socket, T Handle, 33” long, 7/8” socket	572575
Test Probe	526792
ETI Relay Programmer	0400188*
MPCV Relay Programmer	527762

The above listed wrenches may be available in other lengths by special order. The insulation from the time of original manufacture has been increased at the request of Eversource and stock code revisions will reflect “FI” for “Fully Insulated”.

NOTE

The orange surface insulation on these tools has a yellow undercoat. If yellow is detected on the surface due to cuts or punctures, the surface insulation has been compromised and the tool should be retired.

Rolling Out and Isolating the Protector

REMINDER

Although it is not shown in some of the following figures, proper PPE must be worn while performing maintenance and testing on all Network Protectors.

NOTE

The CM-22 Network Protector is a live-front, bolted-in-place device requiring the handling of energized links and/or fuses. Because of this, it is imperative that the CM-22 be out on the rails and isolated from the energized bus work of the enclosure before any work or testing is done.

The CM-22 requires the following procedure for its removal from the housing.

WARNING

CM-22 Aluminum Bus Issue

Small frame (2000 amp and below), submersible Westinghouse, type CM-22 network protectors, containing an aluminum transformer bus may develop a volatile atmosphere within the enclosure if the aluminum transformer bus is exposed to moisture.

Network Protectors with the following Shop Order numbers (S.O. #) are suspected to contain Al transformer bus and require the venting prior to operating the handle.

This requirement also includes protectors that are found in the open position. In addition, if the nameplate on the network protector is missing or not legible, the network protector shall be treated as if it contains Al bus unless it has been positively identified as containing copper bus.

S.O. #'s Year of Manufacture - 1950-1963



30Y, 31Y, 32Y, 33Y, 35Y, 43Y and 44Y, all followed by four digits (Serial numbers starting with the above but followed by three digits are not affected)

13. Prior to operating the network protector handle, determine if the network protector may contain an aluminum bus, as described in the above WARNING. If the protector serial number is within the range of those protectors with aluminum busses, vent the protector cabinet as follows:
    a) Loosen the enclosure cover bolts on the side opposite from the operating handle, while allowing the bolts to remain engaged. Allow for a gap of 1/8" to ¼".
    b) Wait for a minimum of two minutes to allow the enclosure to vent.
    c) Retighten all of the enclosure cover bolts.
14. Operate the network protector handle while standing to the side of the enclosure or as far away as possible from the front of the enclosure. Leave the handle in the "open" position.
15. Verify that the network protector mechanism is in the open position as follows:
    a) Inspect the network protector position indicator through the network protector enclosure window.
    b) Use a clamp or rope style circuit tester (CT) around the conductors of each phase, measure and record the current on each phase of the network protector secondary cables. (Zero current indicates that the breaker position is open.)
    c) Open the enclosure door to inspect the right-hand contacts to verify the contacts are open.

CAUTION:
If the protector contacts do not open, *stop all work* and place the network protector in a safe condition and contact your supervisor.

16. Check the protector enclosure and transformer throat area for signs of liquids.
17. Ensure that there are adequate clearances between energized parts and the ground or that adequate barriers exist.
    - Install temporary boards as necessary to provide adequate clearances.

18. Inspect the CM-22 network protector and correct any of the following conditions. Protectors must be racked out for all repairs, except as noted below:

> **NOTE**
> The following conditions must be made safe before racking out the protector and repaired after the protector is racked out.

- CM-22 Right Hand Extension Rail Assembly, Westinghouse Bulletin Dated June 16, 1987. (Attachment #1). The rail assembly should be changed before racking out.
- CM-22 Auxiliary Switch Assembly, Westinghouse Technical Service Bulletin No 920519. Replacement required if black-filled polycarbonate is cracked or damaged. (Attachment #2).
- Old Style CM-22 BN Plate replacement. BN Plates manufactured from brown or black phenolic material shall be replaced with BN plates manufactured of Glass Polyester material (Red material).

19. Remove the disconnect links at the bottom of the rollout unit, using an insulated wrench and wearing appropriate PPE.
20. Remove the fuse, using a Company-approved insulated socket wrench in good condition and wearing appropriate PPE.
21. Store all fuses, fuse nuts, and links on the inside door ledge of the Network Protector.
22. Loosen the bolts that fasten the rollout unit to the housing.
    a) Loosen the left hand relay panel bolt and the center mechanism “red” bolt to access the (2) left side bolts.
    b) Disconnect the ground bolt last. See Figure 1.

23. Once all panel mounting bolts are disengaged, swing the relay panel closed and retighten the mechanism red bolt and the relay panel left-hand hold down bolts.

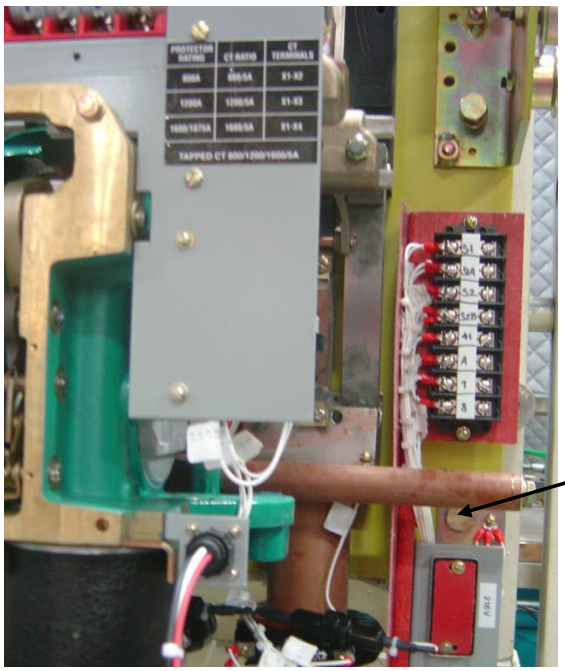

Figure 1 – The Grounding Bolt

24. Install the rail extensions, ensuring they are locked in place, and move the rollout unit from the housing.

Breaker Mechanical Inspection:

1. Record the counter reading.
2. Check for broken or damaged barriers on breaker and housing.
3. Check for any signs of liquid entry into enclosure, transformer throat, etc.
4. Check for indication of overheating, including discoloration of low barrier boards, or a greenish brown paraffin-like substance at the bottom of the enclosure. This may indicate degradation of the insulation back board. Record any findings.
5. Mechanism Roller Test - Ensure that the roller on the mechanism turns freely to ensure proper closure of contacts. Use a light oil to ensure proper lubrication.
6. Use a drop of oil on all mechanism pins.
7. Verify that the mechanism insulation caps are in place.
8. Inspect and clean the motor housing race of the mechanical 2 lead motors only.
   a) Inspect the motor and brushes for wear. Clean and lubricate these parts as necessary.
9. Inspect for loose wiring at control components:
   - Motor control relay
   - Resistors
   - Terminals
   - Auxiliary switches
10. Check for frayed, cracked, or damaged control wire. Asbestos coated wiring or older wire harness may require an additional dielectric test to determine if it has reached its useful life. See Dielectric Testing.
11. Check for loose hardware.
12. Inspect the bumper on the back of the movable relay mechanism assembly to ensure it is in place and in good condition.
13. Inspect the air dashpot, if so equipped, and clean and lubricate as necessary.
14. Inspect the auxiliary switches (behind the cover) and motor contacts for excessive contact wear.

15. Fuse Inspection: (See Figure 2.)

    a) For the Y and Z fuses:
    - Examine the fuse element to ensure that no visible cracks are present in the element or signs of slow melt.

    b) For the alloy fuses:
    - Examine the fuse element to ensure that no visible cracks are present in the element or signs of slow melt.
    - Place the fuse flat on the top surface of the housing door.
    - Ensure that the fuses rock. Discard any alloy fuses that are annealed flat, thus eliminating the required spring action.

NOTE

480Y/277 Voltage units alloy fuses (shown on left) require the extended arc horn and addition barrier to properly clear the phase. Fuses are embossed with the style number that correlates to ampere and curve characteristics.

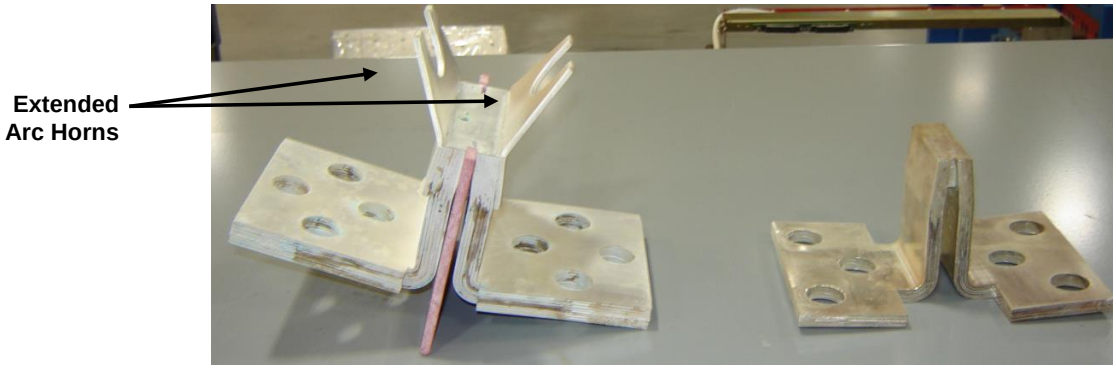

Figure 2 – Fuses

CAUTION

Some arc chutes are made from asbestos. Use hazardous material handling procedures for these.

16. Remove the arc chutes and inspect the contacts.

CAUTION

Do Not clean those arc chutes made from asbestos. Replace them instead.

- Arc chutes must be free and clear of any carbon buildup. Clean as necessary.
- Suspect contacts require an additional Micro-Ohm test to verify the resistance level. See Micro-Ohm section.

17. Arc Contact Timing Test. See Figures 3 and 4.

    This test is critical to determine if the linkages are set properly and to ensure the auxiliary trip “a” contact picks up prior to the arcing contact touching.

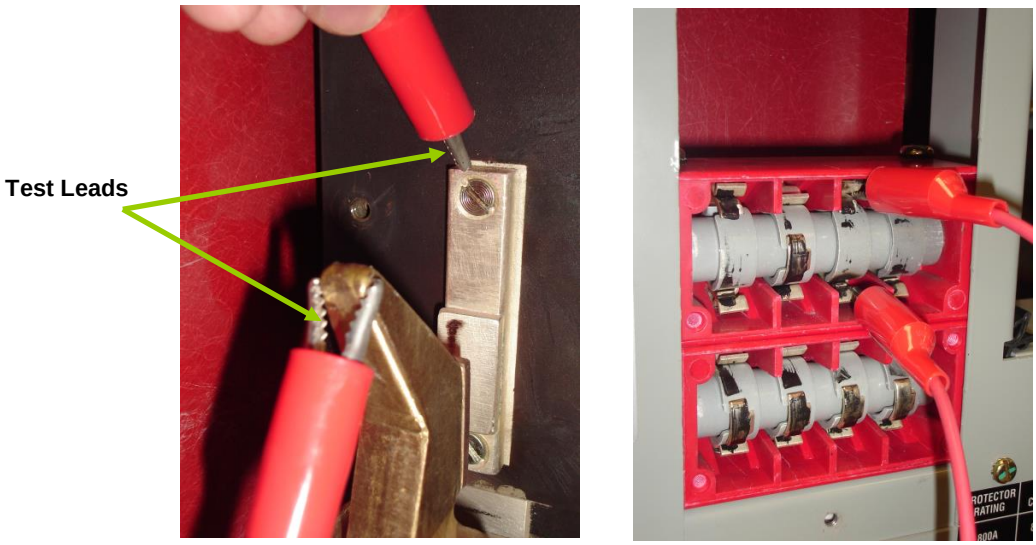

Figures 3 and 4 – The Arc Contact Timing Test

18. Check the cross bar insulation and ensure that there is no build up on the backboard between phases. The backboard integrity and cross bar require an Insulation Resistance test, which is described in the Insulation Test section.

19. Check for melted parafin in bottom of the enclosure which indicates possible deterioration of the backer board.

20. Remaining verification testing will be done with MECHANICAL TESTING and RELAY TESTING. Please see appropriate sections for testing descriptions and the steps required for proper execution.

Test Sequence:

The following sections are a series of tests defined to ensure proper operation at normal condition and at fault duty. It is important to perform the following tests in *this* order:

Test 1 – Manual Breaker Operation Test

Test 2 – Insulation Resistance Test (Megger)

Test 3 – Micro-Ohm Test (Ductor)

Test 4 – Mechanical Electrical Test (Voltage Only Testing)

Test 5 – Relay Tests

Test 6 – Ground Fault Test (For 480V Units Only)

Test 1 – Manual Breaker Operation Test

1. Operate the breaker manually while it is on rails using an external closing prop on the handle. Close and trip the breaker 5 times to verify proper mechanical operation. At least one of these tests should be performed with the protector in its enclosure with the fuses and links removed.

Test 2 – Insulation Resistance Test (Megger)

The CM-22 breaker is constructed upon a common insulated back board and requires periodic insulation integrity checks to ensure proper isolation. In addition, the breaker construction relies upon an insulated cross bar that ties all 3 phases together and must be periodically checked to ensure compliance.

1. Remove all potential leads from the breaker bus.
   - The top is the Network side.
   - The bottom is the Transformer side.
2. Using at least a 1,000 VDC Megger, complete the 9-point test outlined in the chart below: An acceptable value is 10 Meg Ohms or greater for a 1 minute time duration.

Backboard Insulation			
Breaker Position OPEN			
Reading Location	N1 to T1	N2 to T2	N3 to T3
Inspection Value			
Crossbar Insulation			
Breaker Position CLOSED			
Reading Location	N1 to GND	N2 to GND	N3 to GND
Inspection Value			
Crossbar Insulation			
Breaker Position CLOSED			
Reading Location	N1 to N2	N2 to N3	N3 to N1
Inspection Value			

Test 3 – Micro-Ohm Testing (Ductor)

Perform an as-found and then after cleaning, a final ductor test. The maximum acceptable value for ductor testing is 25 micro-ohms or less, using a 100 Amp ductor.

1. With the breaker closed, connect the micro-ohm test leads to the network protector.
2. Test and record the value.
   - If the micro-ohm reading is greater than 25 micro-ohms:
     - ❖ Open the breaker and clean the contact surface with Scotch Brite.
     - ❖ Re-test and record the “as-left” value.

Test 4 – Mechanical – Electrical (Voltage Only) Testing

This is a test of minimum acceptable values using 2 phases of the control circuitry.

Mechanical testing is defined as a "voltage only test" without the use of any network relays (electro-mechanical, solid state or digital). This testing is defined in the IEEE standard for Network Protectors C57.12.44. The basis for this type of testing is the minimum trip and close criteria required.

1. Remove all Network Relays.
   - The phasing relay position type (CNJ) must be jumpered out with the relay removed. (Points 4 &5 on the relay terminal block)
   - The use of a CNJ jumper plate may be required.

CAUTION
Failure to connect the leads in the correct sequence will cause damage to the Network Protector Test Set.

REMINDER
Proper PPE must be worn while attaching leads to an energized bus.

2. Connect the Test Set according to manufacturer's instruction manual and local system operating conditions (phasing).

MIN CLOSE TESTING

1. Apply full system voltage with the test set to ensure closure when the CLOSE button is pressed on the TEST SET.
2. Trip the breaker with the trip lever (Repeat steps (1) and (2) 5 times at full voltage.)
3. Apply 73% of the L-L system voltage. See Table 1. The breaker should NOT close at this level. If the breaker closes, the motor control relay will need adjustment.
   - Older NPs contain a "SG" type open contact motor control relay. There is a center screw on the relay for mechanical contact separation and adjustment. Increase the contact gap for more resistance and stop pickup at 73% level
   - Newer CM-22 designs have an encapsulated motor control relay and use an adjustable resistor on the relay for the same purpose.
4. Apply 80% of the L-L system voltage. The breaker should close.

Table 1 Test Values

Test	%	125/216V	277/480V
a) Minimum Trip	7.5%	16.2V or Less	36.0V or Less
b) Minimum Motor Close Voltage	73%	158V or Less	350V or Less
c) No Pickup (Motor Relay)	73%	158V or Less	350V or Less
d) Min Pickup (Motor Relay)	80%	160V – 173V	354V – 384V

MIN TRIP TESTING

1. With the breaker closed, apply 7.5% of system voltage (16 Volt (216), 36 Volts (480).
2. Depress the TRIP button on the test set.
   - If the CM-22 does not trip at this level, then a sensitivity adjustment is needed on the shunt trip level assembly. The adjustment screw is located behind the swing relay panel. See Figure 6. Access to the screw is given by a hole in the bottom red insulation barrier on the swinging door panel. It is best to remove the motor to view the screw. Any adjustment vertically will make the mechanism more sensitive to trip.
3. To initially set this device, perform the following:
   a. Manually close the breaker.
   b. Adjust this screw upward until the breaker opens.
   c. Turn the screw back down 1 turn after the opening.
   d. Lock down the top lock nut.
   e. Re-test the min level to determine if this adjustment fits the trip range.

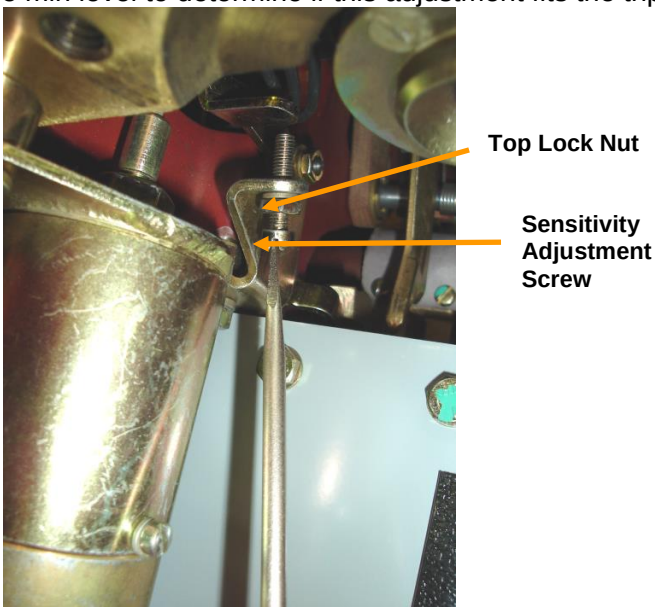

Figure 6 – Trip Screw Adjustment

Test 5 – Relay Tests

Electro-mechanical Relay Tests

1. Perform the Master Relay Overvoltage test and adjust the relay as necessary in accordance with the following documents. Record the As-Found and As-Left values.
   - Network Protector Test Set Instructions
   - Relay Instructions
   - Network Protector Instructions
2. Perform the Phasing Relay Overvoltage test and adjust the relay as necessary in accordance with the following documents. Record the As-Found and As-Left values.
   - Network Protector Test Set Instructions
   - Relay Instructions
   - Network Protector Instructions
3. Perform the Reverse Current Limiting Trip test and adjust the relay as necessary in accordance with the following documents. Record the As-Found and As-Left values.
   - Network Protector Test Set Instructions
   - Relay Instructions
   - Network Protector Instructions
4. If a BN relay is installed, perform the Timing test and adjust the relay as necessary in accordance with the following documents. Record the As-Found and As-Left values.
   - Network Protector Test Set Instructions
   - Relay Instructions
   - Network Protector Instructions

Solid State / Microprocessor Relays

1. Perform an Overvoltage test and adjust the relay in accordance with the following documents. Record the As-Found and As-Left values.
   - Network Protector Test Set Instructions
   - Relay Instructions
   - Network Protector Instructions
2. Perform a Reverse Current Trip test in accordance with the following documents. Record the As-Found and As-Left values.
   - Network Protector Test Set Instructions
   - Relay Instructions
   - Network Protector Instructions

3. If a Time Delay is used, perform a Time Delay test in accordance with the following documents. Record the As-Found and As-Left values.
   - Network Protector Test Set Instructions
   - Relay Instructions
   - Network Protector Instructions

Test 6 – Ground Fault Test (480V units only)

CAUTION
The ground fault protection circuit between the protector and the customer main service is owned and maintained by the customer. Testing the lock out may call for all protectors to trip. An up-to-date drawing must be made available and reviewed to determine those steps which must be taken to prevent tripping of all protectors.

Verify trip from lockout and block the close of the protectors on all units having a ground fault scheme.

NOTE
The Ground Fault system is typically Customer-owned, and the Lockout is typically Eversource-owned. It is important to have an up-to-date print of the scheme prior to performing a test.

This test is only to be performed on those units equipped with a ground fault system.

CM-22 Re-install Procedure

1. Roll the unit back into the housing to its installed position.
2. With an insulated wrench, tighten the ground bolt first and then secure other bolts into place.
3. With the protector breaker in tripped position, use test probe (Stock Code 526792) with a 1 amp or 5 amp current limiting fuse (KTK-1 or KTK-5) in accordance with the manufacturer's instructions to ensure that a short circuit does not exist in the network protector. See Figure 7.

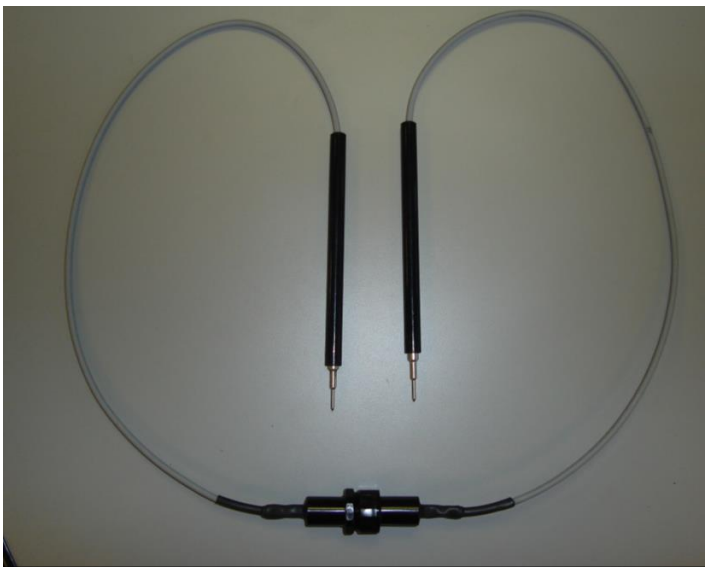

Figure 7 – Test Probe Placement

4. Apply anti-seize grease to the door bolt hardware.
5. Check the door gasket to ensure it is still in good condition.
6. Apply gasket preservative to the door gasket.
7. Tighten all door bolts (The tank is secure once the 2 jam (stop) nuts touch tank.) **NOTE**: Use of impact tools is not recommended and could lead to moving stop nuts for proper sealing and premature door gasket damage.)
8. Check condition of external tank. Check cooling fins to ensure that they are not clogged, missing, or in need of replacement.

9. Verify the protector enclosure is holding pressure using a pressure gauge/fill device. If it is not, perform a **leak check** on those network protectors with submersible enclosures as follows:
   a) Pressurize the enclosure with 5 PSI of dry nitrogen.
   b) Apply a soap solution to the door gaskets, enclosure penetrations, throat gaskets, operating handle gaskets, welds, etc.
   c) Let this sit for 30 minutes.
   d) Check for leaks by looking for soap bubbles. Fix any leaks if possible.
   e) Record any leaks on the inspection form and alert supervision.
   f) Reduce the pressure within the enclosure to (**see Addendum A**) psi.
10. Place the operating handle in as-found position.
11. Read and record the as-left counter reading.

Revision Changes

Revision 1 – Effective Date: **March 6, 2013**
Related Feedback: MS-0159

Revision 1	Description of Changes
1.	Removed all references to TD 871, which has been superseded.
2.	Revised ""Before You Begin" section to incorporate more detailed safety information previously contained in Network Operating Policy.
3.	Moved all cautions to before the steps to which they apply.
4.	Added list of insulated tools that may be useful for Network Protector Maintenance.
5.	Added word Megger (in parentheses) to occurrences of Insulation Resistance Testing. This is to match the other NP Instructions.
6.	Page 12, Test 3 – Mirco-Ohm Testing. The sentence starting "The acceptable value.." is changed to "The maximum acceptable value…"
7.	Reference to Accident Prevention Manual replaced with reference to NU Systems Employee Safety & Health Handbook.
8.	Appended Vendor Tech Manual to end of existing attachments.
9.	Added reference to Network Operating Policy in Instruction 6.30 – Network Transformers.
10.	Changed names of approvers on Signature page.
11.	For Ductor test, changed acceptable reading from 25 ohms to "25 ohms or less".
12.	Removed Caution regarding oil leaking from the enclosure, as protectors do not contain oil.

Revision 2 – Effective Date: **July 1, 2015**
Related Feedback – N/A

1.	Changed names of the Owner, SME, and Approvers on the Signature page, as required.
2.	Incorporated the following global replacements: • NU Maintenance Manual replaced by Eversource Maintenance Program. • CL&P replaced by Eversource Connecticut. • WMECO replaced by Eversource Western Massachusetts. • PSNH replaced by Eversource New Hampshire. • NSTAR replaced by Eversource Eastern Massachusetts. • NUMM replaced by EMP.
3.	Incorporated the following global replacements: • NU Safety Manual replaced by Eversource Employee Safety Manual.

Revision 4 – Effective Date: **July 1, 2017**
Related Feedback – N/A

1.	All stock codes changed to the new Maximo number.
2.	Approvers updated

ATTACHMENT 1

Green Tree DCBU
227-6719
June 16, 1987

USERS OF WESTINGHOUSE TYPE CM-22 NETWORK PROTECTORS
(800A - 2250A)

WARNING: FAILURE TO FOLLOW THE INSTRUCTIONS CONTAINED IN THIS PRODUCT BULLETIN MAY CAUSE DEATH, SEVERE INJURY OR PROPERTY DAMAGE.

It has come to our attention that the right-hand extension rail assembly on certain Westinghouse CM-22 network protectors, manufactured between 1949 and 1984 at the Switchgear Division, East Pittsburgh Works, may be capable of rotating inward, contacting the right-hand moving main contact assembly with resultant faulting which could cause death, severe injury or property damage. Therefore, it is very important that you immediately: (1) identify units affected; (2) order a FREE Westinghouse rail retrofit kit for each such unit; and (3) carefully follow the instructions to perform the rail retrofit on each such unit.

The moving rail assemblies which are affected can be identified by the size of the keeper bar or restraining bar which prevents the moving rail from becoming completely disengaged (falling freely forward) in the stored or upright position. The units which have keeper bars manufactured from 3/8 inch x 1/4 inch steel bar stock are the only units affected by this product bulletin notice of the 800 - 2250 amp units (see attached drawings).

The conditions in which the right-hand rail may be rotated inward are as follows (see attached drawings):

A. The rail has been returned to its stored or upright position. However, the lower end of the rail has not been returned to its keeper lug, which is a weldment located low on each side of the enclosure. This will

ATTACHMENT 1

permit the lower end of the rail to move rearward into the enclosure and combined with an inward thrust subjected to the exposed or upper end of the moving rail can force the body of the moving rail to rotate inward.

B. The keeper bar or restraining bar has become bowed or bent downward. In this condition, the moving rail can rotate inward whether or not it has been returned to its keeper lug in the stored position.

C. The possibility of providing an inward thrust is greatest on those units having the doors hinged on the left hand side. (The combination of Scenarios "A", "B" and "C" provides an environment in which the probability for this occurrence is the most likely.)

In order to prevent the future possibility of any one of the above outlined scenarios from occurring, we are offering a FREE rail attachment to be fitted to the right-hand moving rail of the enclosure. Installation instructions/drawings will be provided with each FREE rail retrofit kit ordered. Order your FREE rail retrofit kit by letter addressed to J. R. Moffat, Five Parkway Center, Pittsburgh, Pennsylvania 15220.

WARNING: This rail retrofit work must be done in accordance with the installation instructons. Failure to do so may cause DEATH, SEVERE INJURY or PROPERTY DAMAGE.

Westinghouse does not have a comprehensive list of affected network protectors. Thus, you must immediately identify the units which are affected by this product bulletin and advise us directly. We will then send you the FREE rail retrofit kits and be available to answer whatever questions you may have. Please help us to assist you in implementing this very important retrofit program.

Call J. R. Moffat at (412) 937-6719 with any questions.

J. R. Moffat
Senior Marketing Representative

0824C

ATTACHMENT 1

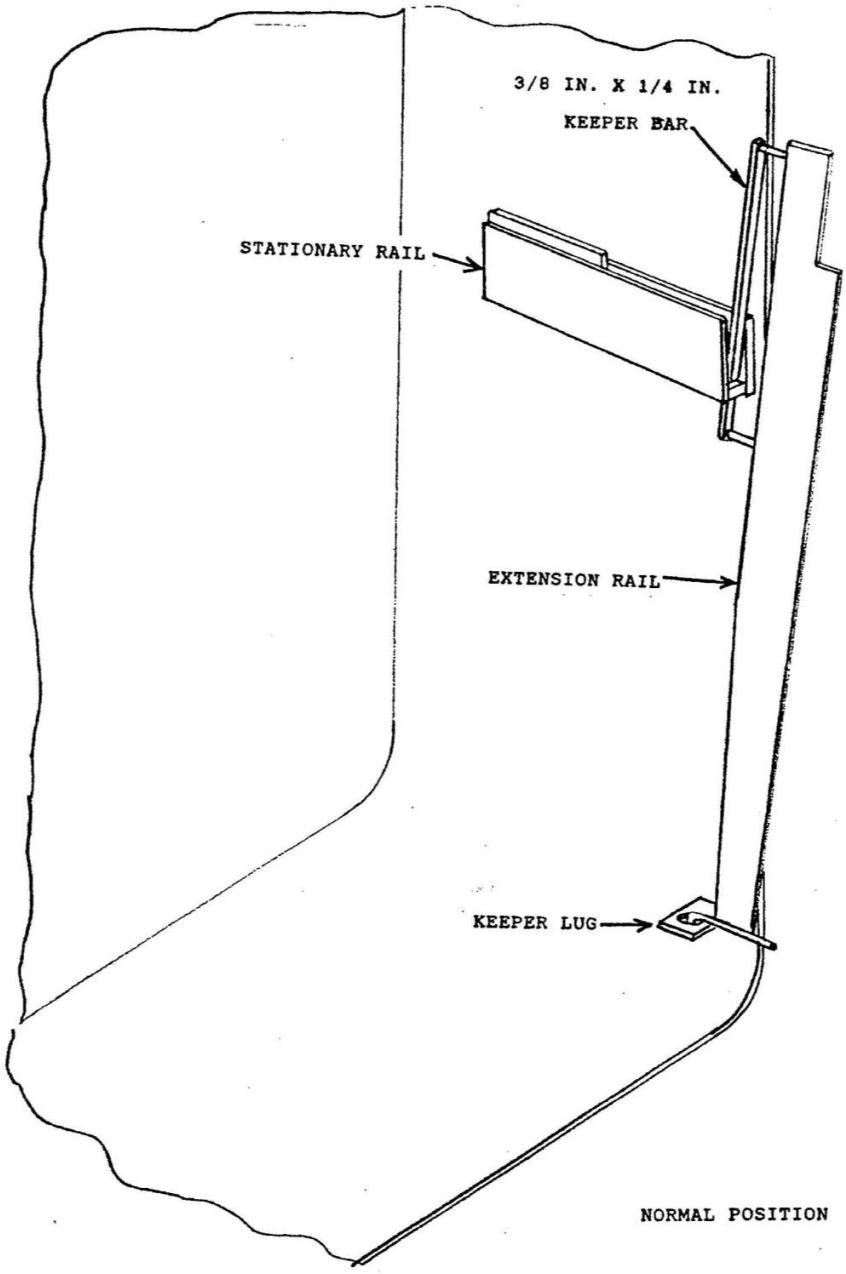

ATTACHMENT 1

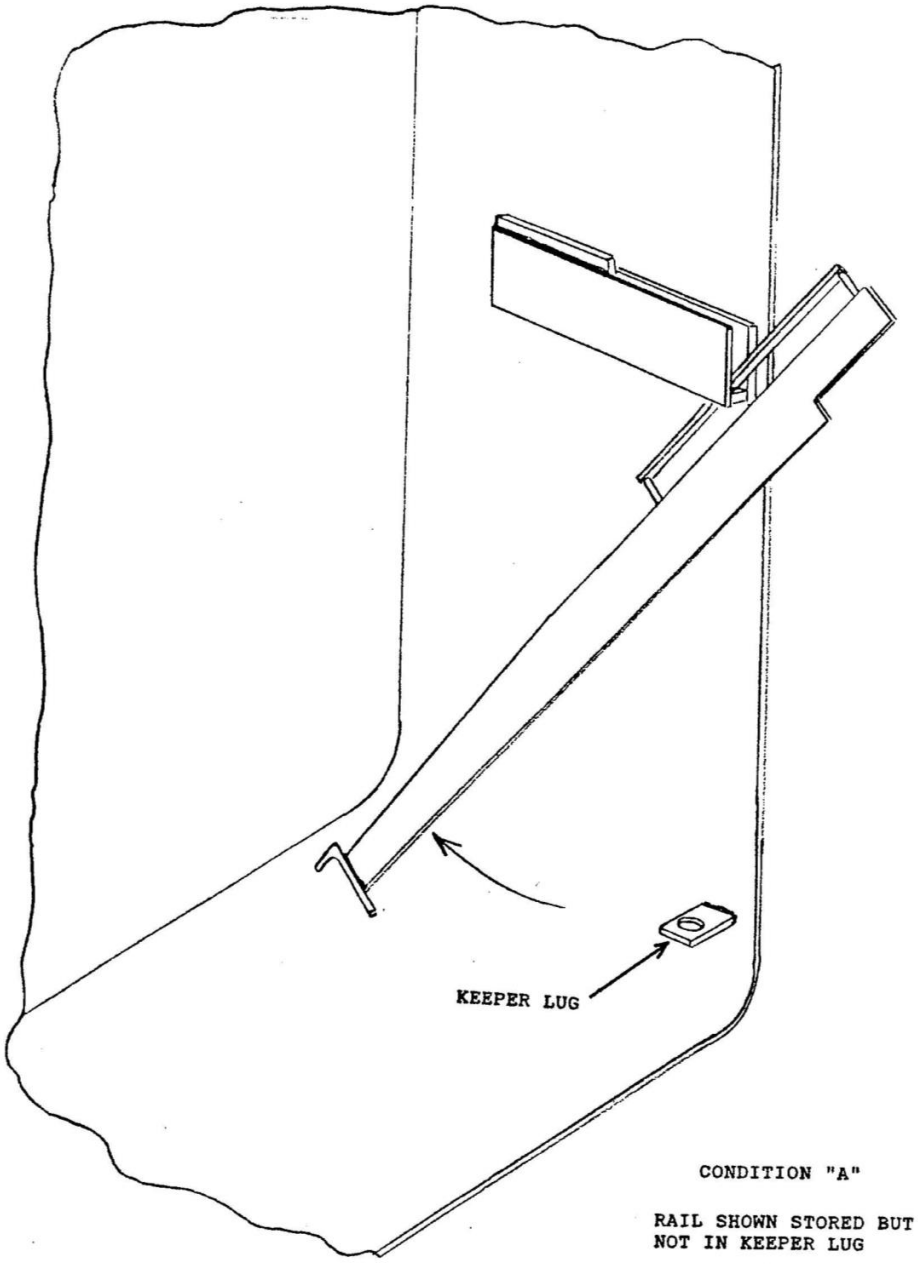

ATTACHMENT 1

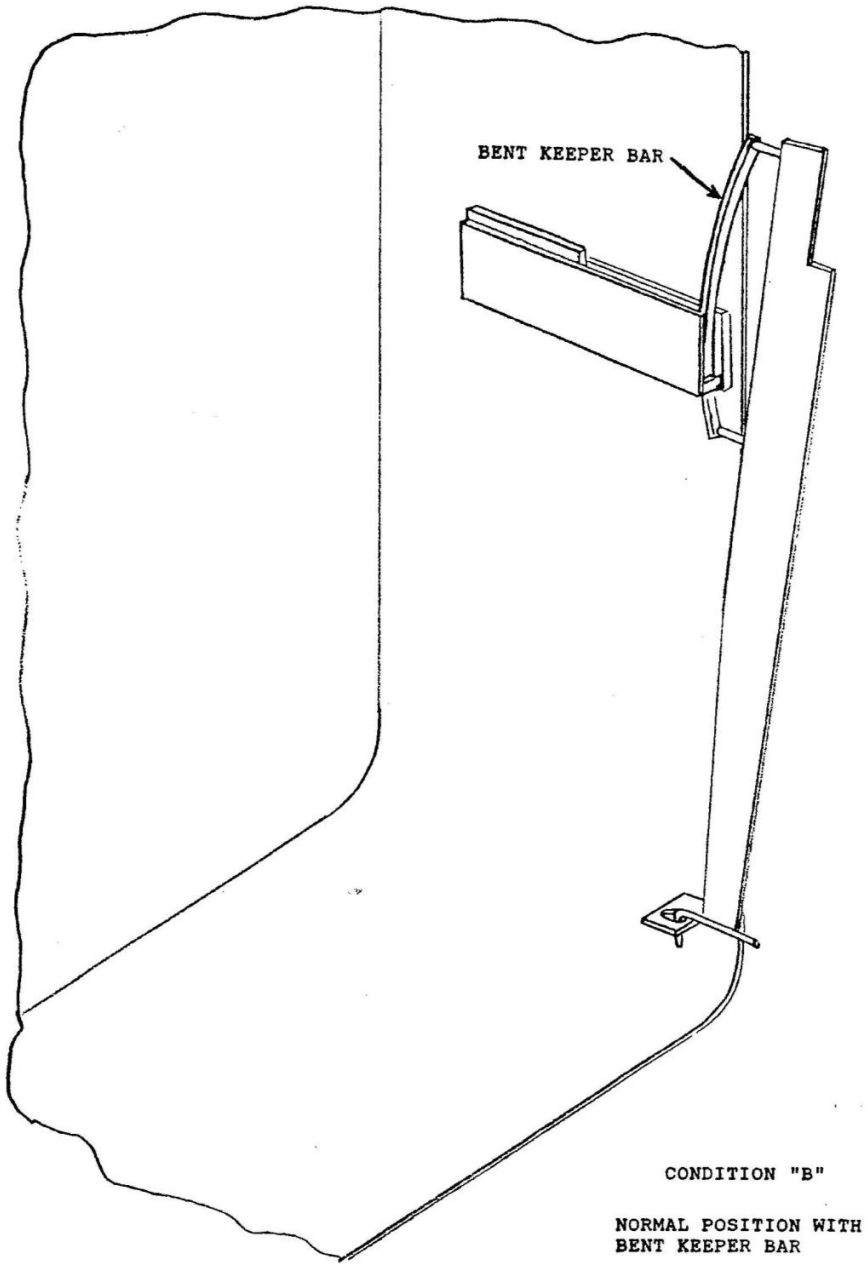

ATTACHMENT 1

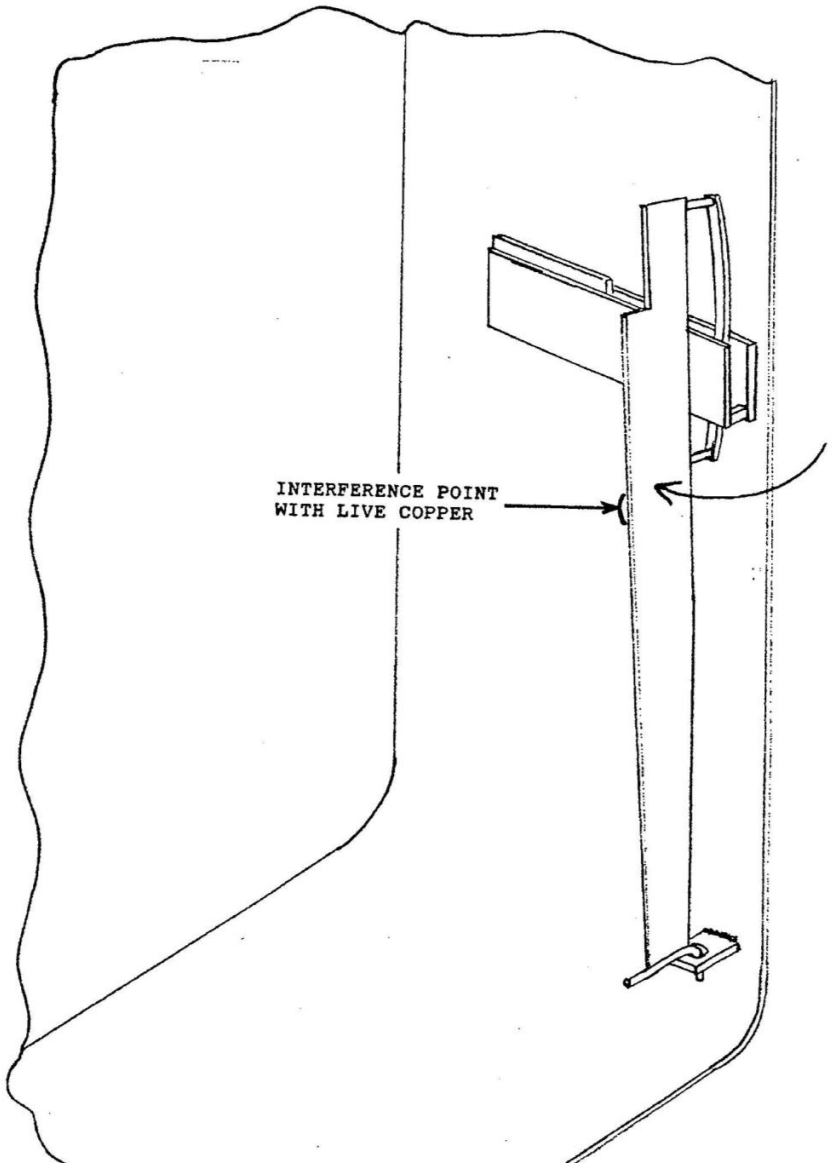

ATTACHMENT 2

TECHNICAL SERVICE BULLETIN NO. 920519

CM-22 AUXILIARY SWITCH ASSEMBLY

WARNING: Failure to follow the instructions contained in this technical service bulletin may result in death, severe personal injury or property damage.

Equipment Affected: CM-22 Network protectors

Problem Encountered: Canadian manufactured type CM-22 network protectors have been experiencing auxiliary switch segments (rotors) which appear to craze and crack, subsequently leading to the rotor sections separating from the operating shaft. The material used for these components from 1975 was a black filled polycarbonate. In 1988, the supplier of the auxiliary switch molded components changed the polycarbonate formulation as well as the curing cycle required. This material was incorporated into network protectors shipped beginning in 1989. The first reported incident was made known to us in 1989. While not all of the material batches manufactured after 1989 were affected, this TSB will be sent to all customers who purchased CM-22 network protectors shipped from January 1989 through October 1991, at which point the material was changed to glass polyester.

WARNING: Failure of the auxiliary switch rotor segments may lead to a failure to "CLOSE" or a failure to "TRIP" of the network protector and/or an energized phase potential circuit which could short circuit to ground through the auxiliary switch shaft. This could result in death, severe personal injury or property damage. Therefore, it becomes imperative that each and every type CM-22 network protector auxiliary switch segment be inspected for crazing or cracking of the rotor segments. Those switches which exhibit any signs of crazing or cracking must be replaced.

Corrective Action: Westinghouse will supply, at no cost, replacement auxiliary switches.* Figure 1 depicts the two styles of auxiliary switches utilized in type CM-22 network protectors. Because the switch segments have different rotor positions, we will supply the complete complement of auxiliary switches for each style. Typically, the 216 volt units use style number 310C626G01, which is a two high stacked auxiliary switch design having eight contacts. The 480 volt units utilize style number 310C626G02 having a three high stacked, twelve contact design.

* NOTE: the operating link or mounting bolts shown in Fig. 1 will not be supplied.

ATTACHMENT 2

Auxiliary Switch Assembly

- Order as 310C626G01 (for 8 pole use)
- Order as 310C626G02 (for 12 pole use)

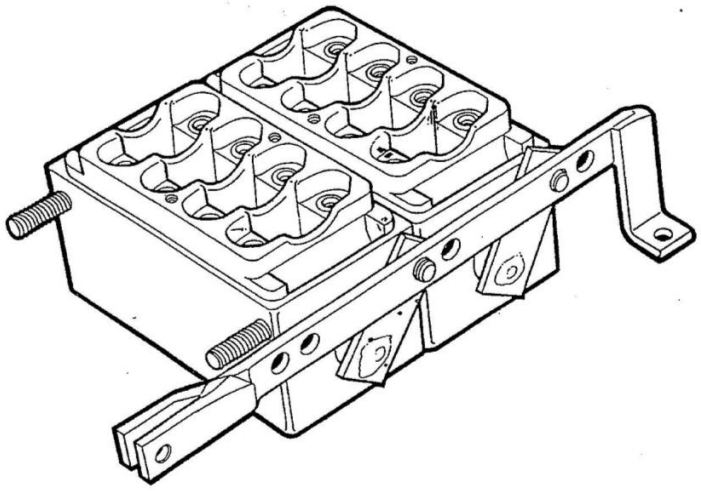

ATTACHMENT 3 – Vendor Manual

Cutler-Hammer I.B.35-500-1E

Type CM-22 Network Protectors 800 to 3500 Amperes

Read and understand these instructions before attempting any assembly, operation, or maintenance of the Network Protectors.

See important disclaimer of warranties and limitation of liability on page 2.

See important safety information on pages 3 and 4.

Effective 7/94 (Reprinted 11-98) Supersedes I.B.35-500-ID Dated 5/91

EATON

DISCLAIMER OF WARRANTIES AND LIMITATION OF LIABILITY

THERE ARE NO UNDERSTANDINGS, AGREEMENTS, REPRESENTATIONS OR WARRANTIES, EXPRESS OR IMPLIED, INCLUDING WARRANTIES OF MERCHANTABILITY OR FITNESS FOR A PARTICULAR PURPOSE, OTHER THAN THOSE SPECIFICALLY SET OUT BY ANY EXISTING CONTRACT BETWEEN THE PARTIES. ANY SUCH CONTRACT STATES THE ENTIRE OBLIGATION OF SELLER. THE CONTENTS OF THIS DOCUMENT SHALL NOT BECOME PART OF OR MODIFY ANY PRIOR OR EXISTING AGREEMENT, COMMITMENT OR RELATIONSHIP.

The information, recommendations, descriptions and safety notations in this document are based on Cutler-Hammer's experience and judgment with respect to CM-22 NETWORK PROTECTORS. THIS INFORMATION SHOULD NOT BE CONSIDERED TO BE ALL INCLUSIVE OR COVERING ALL CONTINGENCIES. If further information is required, the nearest Cutler-Hammer sales office should be consulted.

NO WARRANTIES, EXPRESS OR IMPLIED, INCLUDING WARRANTIES OF FITNESS FOR A PARTICULAR PURPOSE OR MERCHANTABILITY, OR WARRANTIES ARISING FROM COURSE OF DEALING OR USAGE OF TRADE, ARE MADE REGARDING THE INFORMATION, RECOMMENDATIONS, DESCRIPTIONS AND SAFETY NOTATIONS CONTAINED HEREIN. In no event will Cutler-Hammer be responsible to the user in contract, in tort (including negligence), strict liability or otherwise for any special, indirect, incidental or consequential damage or loss whatsoever including, but not limited to, damage to or loss of use of equipment, plant or power system, cost of capital, loss of profits or revenues, cost of replacement power, additional expenses in the use of existing power facilities, or claims against the user by its customers resulting from the use of information, recommendations, descriptions and safety notations contained herein.

NOTE

This instruction booklet covers equipment manufactured on the effective date of this I.B. and as such is different in some details from those units supplied in past years. These differences are primarily notable in the housing and network-side terminators. The breaker elements, in the same frame size, are interchangeable. Understand and appreciate these differences before performing the procedures described herein.

These instructions do not purport to cover all possible contingencies which may arise during installation, operation or maintenance, and all details and variations of this equipment. If further information is desired by purchaser regarding his particular installation, operation or maintenance of his equipment, the local Cutler-Hammer representative should be contacted.

I.B. 35-500-1E

SAFETY INFORMATION

WARNING

FAILURE TO FOLLOW INSTRUCTIONS CONTAINED HEREIN COULD RESULT IN SEVERE PERSONAL INJURY, DEATH, AND/OR PRODUCT OR PROPERTY DAMAGE.

Keep this Instruction Book available to those responsible for the installation, maintenance and operation of the network protector. It should be consulted before any procedures are performed.

The installation, operation and maintenance of a network protector presents numerous potential unsafe conditions, including but not limited to the following:

- Improper operation
- Lethal voltages
- Moving parts
- Heavy components

Specialized procedures and instructions are required and must be adhered to when working on such apparatus.

WARNING

THE NETWORK PROTECTOR MUST BE COMPLETELY UNDERSTOOD AND RESPECTED IN ORDER TO ENSURE THE SAFETY OF THOSE WORKING ON IT. FAILURE TO FOLLOW INSTRUCTIONS COULD RESULT IN SEVERE PERSONAL INJURY, DEATH, AND/OR PRODUCT OR PROPERTY DAMAGE.

Additionally, all applicable safety procedures such as OSHA requirements, regional and local safety requirements, safe working practices and good judgement must be used by personnel when installing, operating and/or maintaining such equipment.

Safety, as defined in this instruction book, involves instructions which are intended to prevent two conditions:

1. Personal injury or death.
2. Product or property damage (includes damage to the protector, other property and reduced protector life).

Safety notations are intended to alert personnel of possible personal injury, death or property damage. They have been inserted in the instructional text prior to the step in which the condition is cited.

The safety notations are headed by one of three hazard intensity levels which are defined as follows:

1. **DANGER:** immediate hazard which **will** result in severe personal injury, death, or property damage.
2. **WARNING:** hazard or unsafe practice which **could** result in severe personal injury, death or property damage.
3. **CAUTION:** hazard or unsafe practice which could result in minor personal injury, or property damage.

Some major safety concerns involving the network protectors are listed below. Refer to appropriate areas of this Instruction Book for further instructions.

1. Always perform appropriate electrical tests per Section 4.7 herein, using a three phase network protector test kit, **before** performing any installation or operation of the network protector.
2. CM-22 Network Protectors are designed to operate within the current and voltage limitations given on their nameplates. DO NOT apply these units to systems with currents and/or voltages exceeding these limits. See Table 1.
3. To perform work on CM-22 Network Protectors requires personnel with training and experience on energized equipment. ONLY QUALIFIED* electrical workers familiar with the construction and operation of such equipment and the hazards involved should be permitted to work on Type CM-22 Network Protectors.
4. There are several interlocks on the protectors. They are for personnel and/or equipment protection. UNDER NO CIRCUMSTANCES SHOULD THEY BE MADE INOPERATIVE.
5. Roll out protector's removable element before making any adjustments or doing maintenance of any nature.

*Qualified Persons as defined in the National Electrical Code.

I.B. 35-500-1E

6. Never energize the protector without the arc chutes and barriers in place.
7. Always be sure that all protector hardware is in place and bolted tightly before placing protector into its housing for operation.
8. Network Protectors are used where a large amount of power is distributed to high load density areas. As a result, any short circuit at any point in the system involves very high fault currents; thus, extreme care should be exercised when installing or working on an energized protector.
9. Extensive use has been made of barriers and interlocks in the CM-22 Network Protectors to provide greater safety to maintenance personnel. Keep barriers in place and immediately replace any that have been broken. Although barriers and interlocks are provided, insulated tools and insulated gloves are required to remove the rollout unit from the enclosure, and also when removing fuses, or at the initial installation of the protector on the system.
10. Before performing maintenance or removing a protector from service, de-energize the protector.
11. All Safety Codes, Safety Standards and/or Regulations as they may be applied to this type of equipment must be strictly adhered to.
12. While proper safety practices on a 216 volt system are extremely important, at 480 volts extraordinary care must be taken. See Para. 4.7.3 for further information.
13. BE SURE that any person performing any type of procedure involving a network protector has reviewed all applicable diagrams and instructions including, but not limited to, the specific schematic and wiring diagram and this Instruction Book.

Type CM-22 Network Protectors are manufactured with several built-in interlocks and safety features to reduce hazards and to provide proper operating sequences.

1. A mechanism bolt shutter prevents the mechanism assembly from being released and swung aside unless the handle and shaft are in the OPEN position.

2. A rollout safety feature prevents the removal of the breaker from the housing unless the extension rails are in position.

3. A drum switch on the operating handle prevents automatic closing of the protector when the handle is in the OPEN or CLOSE positions.

4. Facility for padlocking the handle in the OPEN, CLOSE or AUTO positions is provided.

WARNING

The network protectors described in this book were designed and tested to operate within their nameplate ratings. Operation outside of these ratings may cause the equipment to fail, resulting in death, severe personal injury and/or property damage.

I.B. 35-500-1E

TABLE OF CONTENTS

Page

Disclaimer of Warranties and Limitation of Liability 2
Safety Information 3
Table of Contents 5
List of Tables 7
List of Illustrations 8
Introduction 9

SECTION 1 — RECEIVING, HANDLING AND STORING

1.1 Receiving 11
1.2 Handling 11
1.2.1 Lifting the Breaker 11
1.2.2 Lifting the Enclosure 11
1.2.3 Weights of Rollout Units and Enclosures 11
1.3 Storing 11

SECTION 2 — DESCRIPTION

2.0 General 12
2.1 CM-22 Network Protectors 13
2.1.1 Rollout Unit 13
2.1.2 Enclosures 13

SECTION 3 — OPERATION

3.1 Procedure to Remove the Rollout Unit from Housing 15
3.1.1 To Open Door 15
3.1.2 Positioning Extension Rails 15
3.1.3 Removal of Rollout Unit 15
3.2 Enclosure 17
3.2.1 Submersible Housings 17
3.2.2 Operating Handle 17
3.2.3 Housing Details 19
3.3 Interlocks 19
3.3.1 Mechanism Bolt Shutter 19
3.3.2 Stationary Rail Interlock 19
3.4 Procedure to Service CM-22 Network Protector if the Breaker Fails to Open 19
3.5 Operating Mechanism 20
3.6 Relay Panel and Auxiliaries 23
3.6.1 Main Auxiliary Switch 23
3.6.2 Closing Motor, Two Lead 23
3.6.3 Closing Motor, Three Lead 23
3.6.4 Shunt Trip Assembly 23
3.6.5 Manual Trip Lever 23

I.B. 35-500-1E

Page

3.6.6 Auxiliaries 24
3.6.7 Position Indicator 24
3.7 Operating Sequence 24
3.7.1 Closing Cycle 24
3.7.2 Tripping Cycle 24

SECTION 4 — MAINTENANCE

4.1 Inspection 27
4.1.1 Circuit Breaker 27
4.1.2 Relay and Mechanism Frame 28
4.1.3 Enclosure 28
4.2 Maintenance 28
4.2.1 Stationary and Moving Contacts 800 to 1875 Amperes Inclusive 28
4.2.2 Stationary and Moving Contacts 2500 and 3500 Amperes 29
4.2.3 Fuses 29
4.2.4 Main Barrier 29
4.2.5 Current Transformers 29
4.2.6 Miscellaneous 30
4.3 Submersible Housing 31
4.3.1 Leak Testing 32
4.3.2 Gasket Materials 32
4.3.3 Threaded Plugs 32
4.4 Replacement of Cover Gasket and Reversal of Handle 32
4.4.1 Gasket Replacement 32
4.4.2 Adjustment of Gasket 33
4.4.3 Centering the Cover on the Housing 33
4.4.4 Reversal of Hinged Side of Cover 34
4.4.5 Operating Handle 34
4.4.6 Reversal of Handle 34
4.5 Non-Submersible Housing 34
4.6 Adjustments 34
4.6.1 Circuit Breaker, 800-1875 Amperes Inclusive 34
4.6.2 Circuit Breaker, 2500 and 3500 Amperes 35
4.6.3 Operating Mechanism Adjustments 36
4.6.4 Enclosures 36
4.7 Electrical Tests 37
4.7.1 Operation Test Procedures 37
4.7.2 Maintenance Electrical Test 38
4.7.3 Safety During Installation and Maintenance of 480 Volt Network Protectors 38
4.7.4 Safety Probe Procedure 40

SECTION 5 — OVERHAUL AND REPAIR **Page**

5.1 Safety Instructions 41
5.2 Check List of Equipment Troubles 41
5.2.1 Circuit Breaker 41
5.2.2 Mechanism and Relay Panel 41
5.3 Tools For Overhaul and Repair 42
5.4 Disassembling Instructions 42
5.4.1 Removal of Rollout Unit from Enclosure 42
5.4.2 Removing the Upper Stationary Contact 42
5.4.3 Removing a Current Transformer 42
5.4.4 Removing a Moving Contact
Outer Pole 1875 Amperes and Below 42
5.4.5 Removing a Moving Contact
Middle Pole 1875 Amperes and Below 43
5.4.6 Removing a Complete Relay Panel and Mechanism 43
5.4.7 To Remove Motor Control Relay 43
5.4.8 To Remove the Auxiliary Switches 43
5.4.9 Terminator Assembly 44
5.5 Retro - Build 44
5.5.1 Dielectric Test on Transformer Bus 44
5.5.2 Dielectric Test on Rollout Unit 44
5.5.3 Lead-alloy Fuse Tension 44
5.5.4 Gasket Leaks 44
5.5.5 Current Transformer Style Numbers and Insulation 45

LIST OF TABLES

Table 1 Network Protector Ratings 10
Table 2 Typical Weights of CM-22 Network Protectors 11

LIST OF ILLUSTRATIONS

Figure	Title	Page
1	Front View of CM-22 Submersible Enclosure	12
2	Front View of CM-22 Non-Submersible Enclosure	13
3	CM-22 Network Protector Enclosure	14
4	Using Insulated Wrench to Loosen Nuts	15
5	Inserting One Rail Into Position	16
6	View of Both Rails In Place	16
7	View With Breaker Out on Rails	16
8	CM-22 Network Protector Operating Handle	16
9	Red Mechanism Bolt	18
10	Simplified Diagrams of Operating Mechanism	20
11-a	Operating Mechanism - Protector Open	21
11-b	Operating Mechanism - Protector Tripped free	21
11-c	Operating Mechanism - Protector Closed	22
12	Typical Wiring and Schematic Diagram for 125/216 Volt System, Three Lead Motor	25
13	Typical Wiring and Schematic Diagram for 277/480 Volt System, Three Lead Motor	26
14	800-1875 Ampere Moving and Stationary Contact Assembly	28
15	2500 and 3500 Ampere Moving and Stationary Contact Assembly	30
16	2500 Ampere Submersible Housing with Sliding Hinge Centers	33
17	Sliding Hinge Details	33
18	Shaft Details for Submersible Housings	37
19	Lead-Alloy Fuse Configuration	45

INTRODUCTION

PURPOSE

This instruction book is expressly intended to describe the installation, operation and maintenance of the Type CM-22 network protectors. Should any item not be sufficiently covered by these instructions and additional information is required, contact your local Cutler-Hammer office.

It is not the intent of this bulletin to describe the operation of a secondary network. For this, refer to Descriptive Bulletin 35-550. Information regarding operation, maintenance and testing of network relays is contained in Instruction Book 35-580A for electro-mechanical relays and I.B. 35-581A for solid-state relays.

For application information, consult your nearest Cutler-Hammer sales office, or see appropriate Standards.

WARNING

IT IS *NOT SAFE* TO OPERATE THE CM-22 NETWORK PROTECTORS UNLESS THEY ARE INSTALLED IN A SUITABLE METAL ENCLOSURE OF ADEQUATE STRENGTH TO WITHSTAND THE EFFECTS OF HIGH CURRENT SHORT CIRCUIT FORCES. FAILURE TO HAVE A SUITABLE METAL ENCLOSURE COULD CREATE A CONDITION CAUSING DEATH, SEVERE PERSONAL INJURY AND/OR PROPERTY DAMAGE.

The need to provide electrical power at the utilization voltage - without increasing equipment size - has resulted in a shift from 216Y/125V to 480Y/277V systems, and in some cases to 600Y/347V. With this trend toward the higher voltage, a change in operating and maintenance procedures is required, because of the difference in arcing characteristics at 480 volts or 600 volts as compared to those at 216Y/125V. For example, while an arc in a 216-volt system is normally self-extinguishing, an arc in a 480-volt system or higher will usually burn until it is interrupted by an extinguishing device or until it totally consumes the arcing material. Because of this property of electricity **YOU MUST** read and fully understand the SAFETY INFORMATION on pages 3 and 4 of this Instruction Book.

The Cutler-Hammer CM-22 Network Protectors are designed to assure service continuity in 216Y/125V, 480Y/277V and 600Y/347V Y-connected secondary network systems. These systems, in either distributed grid or spot network form, are commonly used in such areas of high load density as metropolitan and suburban business districts.

When a fault on a primary system (cable or network transformer) occurs, the associated CM-22 Network Protectors will open to isolate the fault from the network system. Loss of the feeder and the associated network protector trip will not result in service outage to any load on the secondary network. The other primary feeders will carry the load until the faulted feeder can be brought back into service.

The CM-22 Network Protectors consist basically of an air circuit breaker, a breaker operating mechanism, network relays and control equipment. It is available in ventilated, semi-dust-tight and submersible enclosures, for either separate or transformer throat mounting.

The protector is composed of a circuit breaker, a motor operated mechanism, a network master relay, and a network phasing relay, with the necessary wiring conveniently arranged for the addition of a de-sensitizing relay when required. Solid-state relays incorporate all relay functions in one device.

The circuit breaker is of simple construction with contacts of silver tungsten and metal arc transfer tips. The contact pressure is high to ensure good contact. Fuses are supplied for the purpose of giving an additional protection feature, in case the CM-22 breaker does not trip at the time of a fault on a feeder. Current transformers for operating the relays are located on the pole units. Means are provided for isolating the rollout unit conveniently from the energized bus so that the protector may be readily worked upon or tested in the field.

The mechanism is mechanically trip free. The latch is actuated by a shunt trip device, constructed to permit tripping at very low voltages. Accelerating springs are included in the breaker unit to aid in opening the circuit breaker contacts rapidly. For a description of ELECTRICAL TESTS refer to Para. 4.7.

Table 1 - NETWORK PROTECTOR RATINGS

The following table gives the maximum continuous current ratings of standard type CM-22 Network Protectors. The suggested transformer sizes are based on conventional electric utility practice for 216Y/125V, 480Y/277V and 600Y/347V Y-connected secondary networks. As a guide, it is usually desirable to rate the network protector approximately **130% to 150% of transformer rating.** The protectors are maximum rated devices, whereas the transformers have significant short time overload capacity.

Network Protector Amperes	Interrupting Rating Amperes	Transformer Rating — KVA		
		125/216V	277/480V	347/600V
800	30,000	225		500
1200	30,000	300		750
1600	30,000	500		1000
1875	30,000	500		1000
* 2000	60,000	500	1000	1500
* 2250	60,000	500	1000	1500
2500	60,000	750	1500	1500
2825	60,000	750	1500	2000
3000	60,000	750	2000	2000
3500	60,000	1000	2000	2500

* These ratings are now built on 2500 A. frame breaker

I.B. 35-500-1E

SECTION 1 - RECEIVING, HANDLING AND STORING

1.1 RECEIVING

Each unit shipped comprises a housing containing a rollout unit and complete with spade terminals or threaded studs.

Solid-state network relays are shipped mounted in position.

When receiving new network protectors, make a general inspection looking particularly for damage which may have occurred in handling and shipping. If any damage is found, file claim with carrier within 24 hours. If the unit is to be placed in storage for more than a few weeks, it should be inspected and tested thoroughly and any deficiencies reported.

1.2 HANDLING

1.2.1 Lifting the Breaker

To facilitate lifting, the roll-out unit frame contains two 1-3/8 inch diameter holes located on the roller brackets.

CAUTION

A SPREADER MUST BE USED WHEN LIFTING TO ENSURE THAT NO DAMAGE TO THE BARRIERS OR ARC CHUTES OCCURS. ALWAYS USE PROPER AND SAFE LIFTING DEVICES AND PROCEDURES APPROPRIATE TO THE WEIGHT BEING LIFTED, AS SHOWN IN PARA. 1.2.3.

1.2.2 Lifting the Enclosure

Two lifting brackets with lifting holes, 2 inch diameter, are located near the top at each side of the enclosure. Spreaders must be used on chains or slings to prevent damage to the network side terminals.

For shipping, CM-22 network protectors are usually packed in plywood enclosures on a wooden skid, designed for handling by forklift truck or crane and sling. Non-submersible units are packed in the upright position. Submersible units may be packed in the horizontal position or the upright position. To unpack, remove the plywood enclosure, detach the unit from the base, and lift to the upright position. All unpacked units should be transported and stored in the upright position.

1.2.3 Weights of Rollout Units and Enclosures

Table 2 - Typical Weights of Type CM-22 Network Protectors

Rollout Units	Pounds
800-1875A	400
2000-3000A	550
3500A	650
Enclosures (less rollout units)	
Submerible 800-1875A	600
Submersible 2000-3000A	1330
Submersible 3500A	1700
Non-Submersible 800-1875A	450
Non-Submersible 2000-3000A	650
Non-Submersible 3500A	800

1.3 STORING

Submersible units may be stored as received with door tightly closed and with the shipping cover over the throat opening. Shipping covers should not be considered watertight, as they are for dust protection only. Protectors should be stored in a clean, dry location.

I.B. 35-500-1E

SECTION 2 - DESCRIPTION

2.0 GENERAL

Type CM-22 network protectors are air circuit breakers equipped with relays that operate in response to voltage across the protector or current through the protector. These relays cause the protector to close or to open as required by conditions between the network and the feeder transformers. Control power is taken directly from the system and therefore no separate power source is required.

CM-22 units are available as standard, for 216Y/125 volts, 480Y/277 volts or 600Y/347 volts at 60 Hertz; with other voltages as well as 50 Hertz units available upon request.

Fig. 1 shows a CM-22 Submersible Enclosure for transformer mounting. Fig. 2 shows a ventilated enclosure for transformer mounting.

WARNING

TYPE CM-22 NETWORK PROTECTORS ARE PROTECTIVE DEVICES. AS SUCH, THEY ARE MAXIMUM CURRENT RATED DEVICES. THEREFORE, THEY SHOULD NOT UNDER ANY CIRCUMSTANCES BE APPLIED OUTSIDE THEIR NAMEPLATE RATINGS. OPERATION OUTSIDE OF THESE RATINGS COULD CAUSE THE EQUIPMENT TO FAIL, RESULTING IN SEVERE PERSONAL INJURY, DEATH OR PROPERTY DAMAGE.

The normal power flow direction is in at the throat from the transformer, down to the transformer side disconnect link on the rollout unit, up through the breaker to the network side fuse and through the top of the enclosure to the out going terminal.

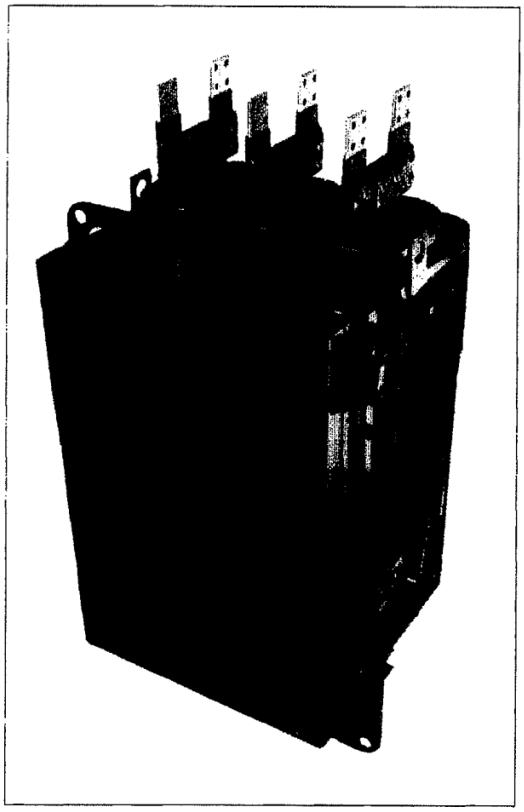

FIG. 1 *Front View of CM-22 Submersible Enclosure*

I.B. 35-500-1E

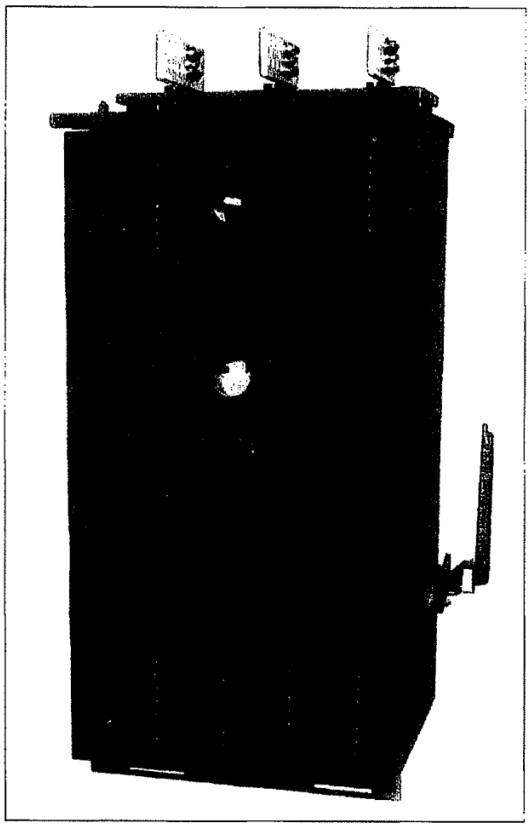

FIG. 2 *Front View of CM-22 Non-Submersible Enclosure*

2.1 CM-22 NETWORK PROTECTORS

The complete protector consists of the rollout unit and its associated enclosure.

2.1.1 Rollout Unit

The circuit breaker, mechanism and relay panel assembly is designed as a unit which, except for fuses and current transformers, is identical for ratings of 800, 1200, 1600 and 1875 ampere protectors. The relay panel is the same for all ampere ratings between 800 and 3500 amperes inclusive. The circuit breaker elements are identical for all ratings between 2000 and 3000 amperes on units made after 1986. A slight modification is made to provide the 3500-ampere rating. The interchangeable unit, called the rollout unit, is readily removable from the enclosure for inspection, maintenance and electrical tests. The removal of the disconnecting links at the bottom and the fuses at the top isolates the rollout unit completely. The further removal of four bolts permits the rollout unit to be removed from its mounting. Only perform these procedures in accordance with this Instruction Book. See Section 3.1.

2.1.2 Enclosures

The rollout unit may be mounted in any one of three types of enclosures:

- Submersible
- Ventilated
- Semi-Dust-Tight

All three types of enclosures are available for either transformer mounting or separate mounting.

Most CM-22 enclosures are equipped with **self-locking extension rails** on which the breaker can be rolled out to permit inspection or removal. These extension rails are removable and stored inside the enclosure door. The rails are manufactured from 3/8 x 3 inch steel bars which provide excellent rigidity to support the breaker. When positioned these extension rails self-lock without the use of any hardware; when removed, a rollout safety feature has been designed into the interior fixed rails to prevent any unintentional rollout of the breaker. Captive rails are also available.

The **standard Submersible housing** is a welded, ¼ inch thick mild steel, watertight enclosure. The door can be hinged from either side. The cast external operating handle can also be mounted on either side of the enclosure and may be padlocked in one of three positions - OPEN, AUTO or CLOSE. The door is provided with one or more windows for the inspection of fuses, operation counter and position indicator.

The **Submersible seal** is accomplished by means of a tubular neoprene gasket held by gasket retainers along the edge of the door. The gasket is compressed uniformly between the edges of the housing and the door by pressure applied through four or six clamping bolts. After the enclosure has been factory tested at 7 PSI internal pressure, two lock nuts on each clamping bolt are set to provide a positive stop. This assures a watertight seal to

be easily re-established each time the door is closed after inspection.

A unique feature of the special gasket retainer design is the **corner casting.** This investment casting blends into the outer and inner gasket retainer guides and assures the squareness of the door for a reliable, watertight seal. The corner casting, as well as the outer gasket retainer guide, is manufactured from stainless steel to prevent gasketing failure due to corrosion of the retainer.

Another submersible design feature is the **picture frame** welded to the housing. This picture frame tightly envelops the four housing sides. This provides rigidity to the housing and maintains squareness of the opening and straight edges; this is extremely important to ensure a reliable, watertight seal.

Submersible ratings from 2000 to 3500 amperes incorporate cast cooling fins in the sides of the enclosure to aid in dissipation of internal heat. These cooling fins are designed to eliminate the possibility of crevice corrosion stemming from incomplete paint coverage of inaccessible areas.

To enhance the corrosion resistance on submersible units all **external hardware** and attachments are stainless steel or non-corrosive metals.

The enclosure utilizes **moulded epoxy bushings** with conductor terminations to suit customer specifications.

For extremely severe environmental applications, Cutler-Hammer can provide, as an optional extra, an **all-stainless steel enclosure.** This enclosure is manufactured from a corrosion-resistant, non-magnetic, type 316 stainless steel.

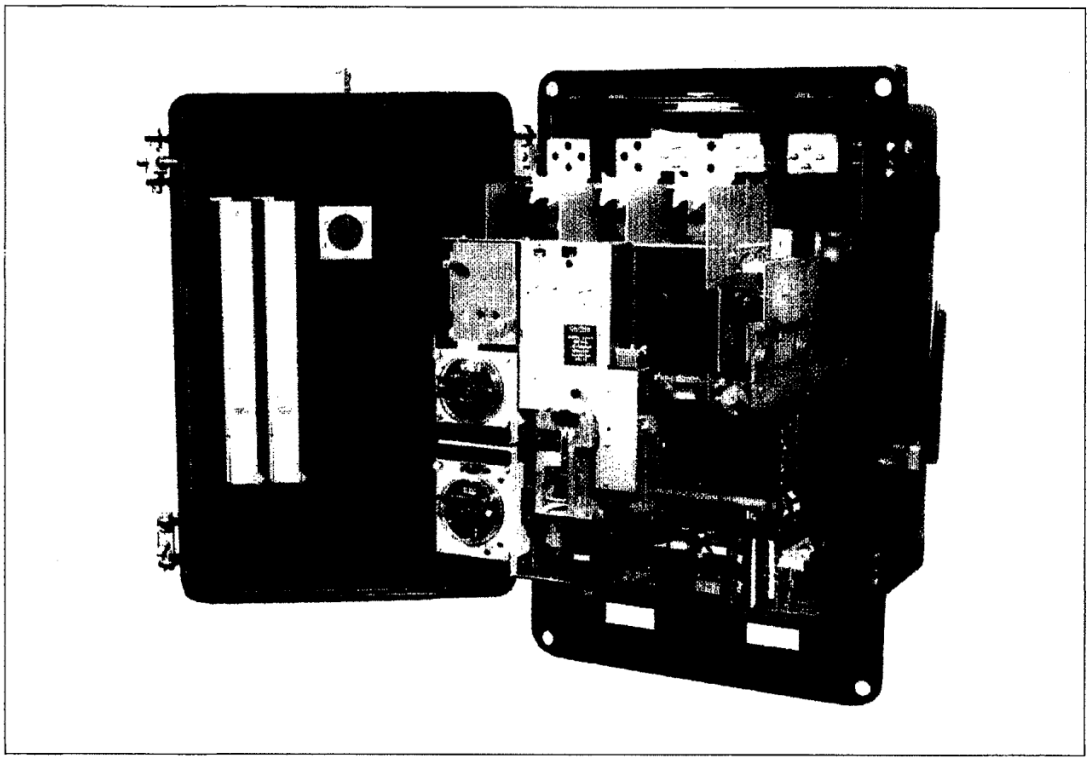

FIG. 3 *CM-22 Network Protector Enclosure*

I.B. 35-500-1E

SECTION 3 - OPERATION

3.1 PROCEDURE TO REMOVE THE ROLLOUT UNIT FROM HOUSING

WARNING

WHEN THE ENCLOSURE IS NOT ATTACHED TO A TRANSFORMER, THE ENCLOSURE MUST BE SUPPORTED IN A WAY THAT WILL PREVENT TIPPING FORWARD WHEN THE DOOR IS OPEN AND THE ROLLOUT UNIT IS ON THE EXTENSION RAILS.

3.1.1 To Open Door

The quick opening enclosure is opened by loosening all the bolts, starting with the bolts on the hinged side. The hinge bolts are loosened until the bolts come against the stops. Then the bolts on the opening side are loosened until they are completely disengaged from the housing blocks.

3.1.2 Positioning Extension Rails

(Refer to Fig. 4, 5, 6).

Remove extension rails from storage location on door. Insert into position on the fixed enclosure rails. To do this enter slotted end onto fixed rail while holding the stop pin end up about 45°. (See Fig. 5). When in against fixed rail, lower stop pin end to horizontal, causing the small block between the slot plates to lock into notch on lower edge of fixed rail. Be certain that both extension rails are solidly attached to the fixed rails in the housing. DO NOT bend or force the rails into place. They should readily fit into position. Both rails are duplicate and interchangeable between left and right.

3.1.3 Removal of Rollout Unit from Enclosure

For detailed procedure refer to Para 4.7.3 in its entirety. Perform the following steps:

1. Place the operating handle in the OPEN position.
2. Remove the disconnecting links first and then the fuses.
3. Loosen the panel mounting bolts located near each corner of the main panel. During this operation it is necessary to open the relay panel by loosening the two bolts which fasten the relay panel to the circuit breaker, to gain access to the left hand side panel mounting bolts.
4. Once all panel mounting bolts are disengaged, swing the relay panel closed and retighten the mechanism red bolt and the relay panel left-hand hold down bolts.
5. Roll the breaker element onto the extension rails until the front rollers meet the rail stops.

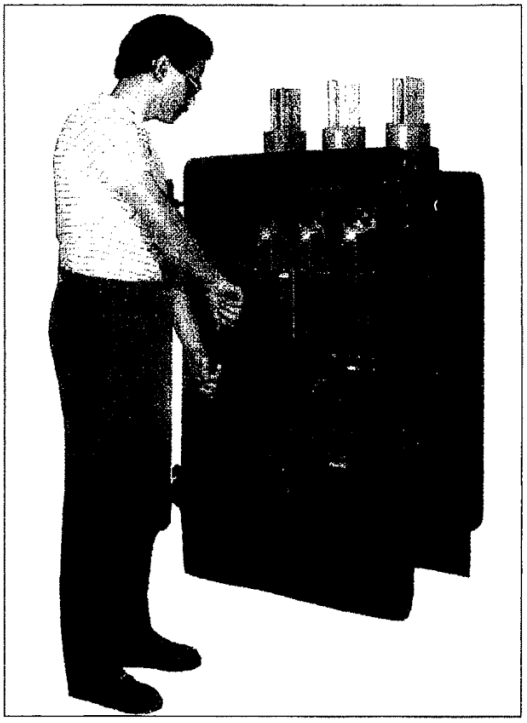

FIG. 4 *Using Insulated Wrench to Loosen Nuts*

I.B. 35-500-1E

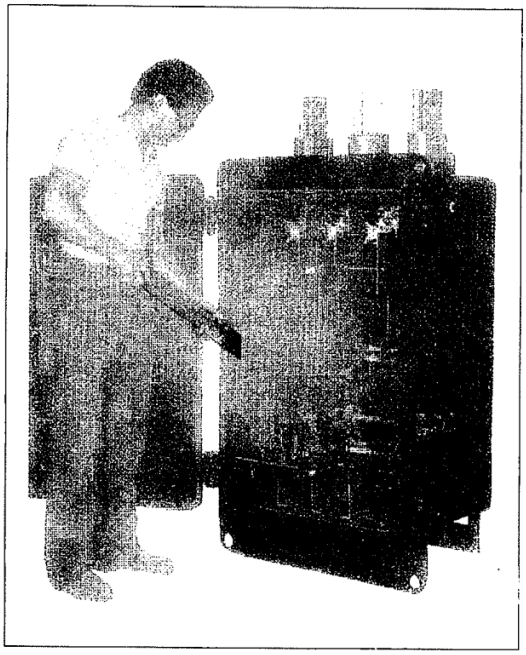

FIG. 5 *Inserting One Rail Into Position*

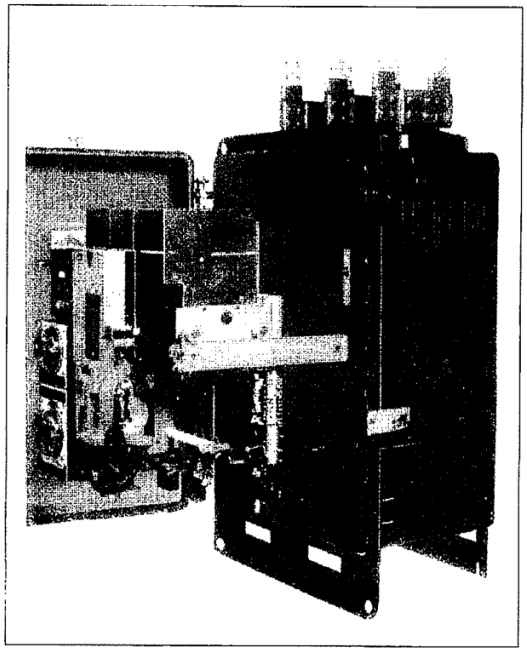

FIG. 7 *View With Breaker Out on Rails*

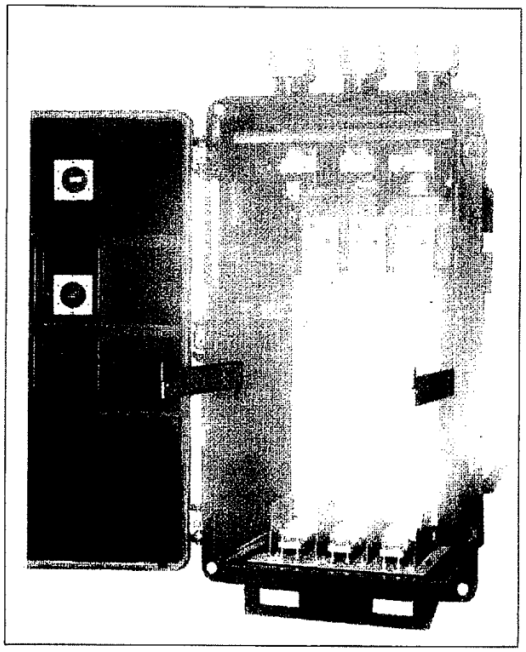

FIG. 6 *View of Both Rails in Place*

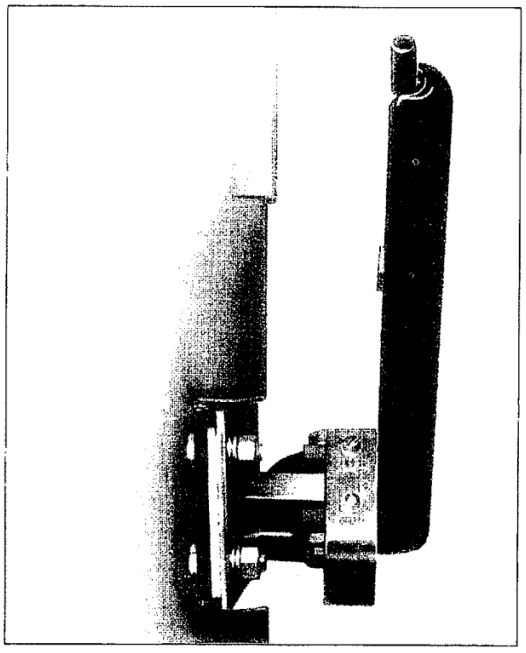

FIG. 8 *CM-22 Network Protector Operating Handle*

I.B. 35-500-1E

3.2 ENCLOSURE

3.2.1 Submersible Housings

The housing for the submersible protector is of welded sheet steel construction. The entire housing is white metal blasted and protected by a modified epoxy paint to minimize corrosion in service. A cover, which is arranged so that it may be hinged on either side, provides ready access to the interior of the housing. A watertight seal is provided between housing and cover by compressing a circular Neoprene gasket between machined surfaces on the housing and cover.

Neoprene, a synthetic rubber material, is highly resistant to the action of oils and other materials likely to be encountered in network protector applications. To prevent the gasket, which is secured to the cover by means of a gasket retainer, from sticking to the housing when the housing is clamped shut, the contacting surface of the gasket is coated with 130A Lubriplate. Unless wiped off, the lubricant need not be renewed through many openings and closings of the cover.

The cover is dished in order to obtain greater rigidity in the clamping direction. This coupled with a narrow bearing area between machined steel and gasket, produces a watertight seal with relatively few clamping bolts.

Sliding Hinge Centers

The quick opening housing with sliding hinge centers is opened by loosening all the bolts, starting with the bolts on the hinged side. The hinge bolts are loosened until the bolts come against the stops. Then the bolts on the opening side are loosened until they are completely disengaged from the housing blocks.

To close and seal the housing it is only necessary to tighten all bolts until they come against the stops. The bolts on the opening side are tapered on the end to facilitate entering the tapped holes in the housing blocks. Springs on the hinge bolts keep the hinged side of cover positioned correctly when the cover is open.

Cover

The cover is equipped with a window or windows for inspection of fuses, position indicator and operation counter. The window is of high impact polycarbonate clamped by gaskets for cushioning action and to keep the housing watertight.

3.2.2 Operating Handle

The external operating handle is normally located at the left side but provision is made for mounting it on the right hand side as well. An auxiliary shaft mounted in the housing connects the operating handle to the shaft on the protector. This shaft can be interchanged between the right and left hand side of the housing.

A packing gland tightened by means of a spanner nut provides a watertight seal between the housing and the handle shaft. The spanner nut is held in place by a locking clip. When the hand operating packing gland leaks, the locking clip must be removed, the spanner nut tightened until a watertight seal is obtained and the locking clip is replaced.

By removing a clamping bolt, the operating handle may be removed from its shaft in order to decrease the overall dimensions when handling the housing. Combined with the external operating handle is a locking flange, by means of which the protector may be locked in any of the three positions. The operating handle is interlocked to prevent rolling the protector in fully unless the protector is open and the operating handle is in the OPEN position.

The handle and shaft combination have three significant positions; OPEN, AUTO and CLOSE. A lever at the center of the shaft engages with a lever of the mechanism toggle in such a manner that the movement of the handle from the AUTO to the CLOSE position will push the mechanism toggle to the closed position in a manner similar to that performed by the motor in electrical operation. An interlock prevents the mechanism assembly from being released and swung aside unless the handle and shaft are in the OPEN position.

In the OPEN position, a second lever at the center of the shaft engages with a portion of the tripping mechanism in such a manner that the protector is tripped when the handle is moved to the OPEN position. The shaft also actuates a small drum switch at its left end in such a manner that the closing circuit of the motor is opened when the handle is in the OPEN or CLOSE positions, thereby preventing the mechanism from closing electrically when the handle is in these positions. In the CLOSE position of the handle, the protector is able to trip-free

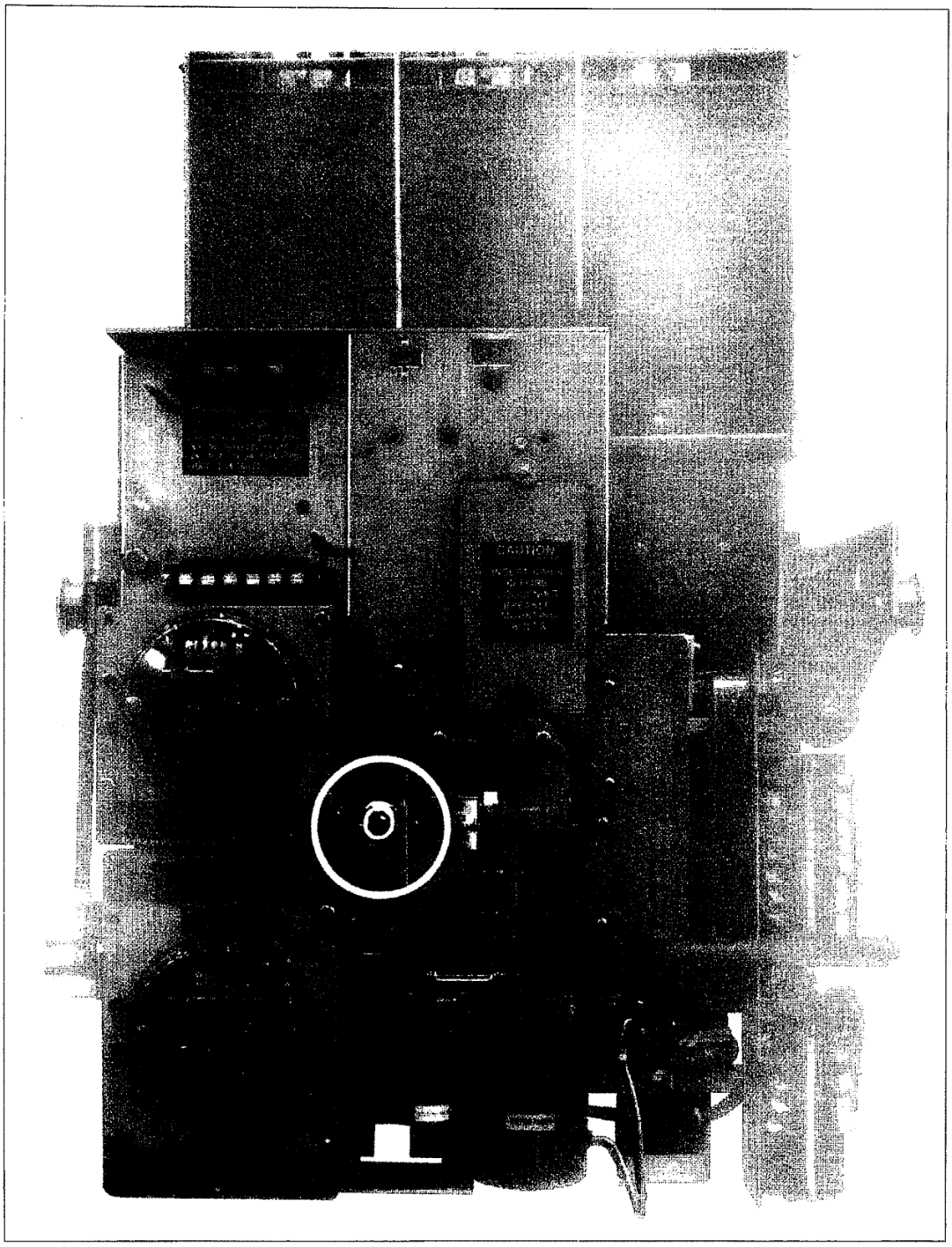

FIG. 9 *Red Mechanism Bolt*

I.B. 35-500-1E

from the mechanism, but the protector cannot then reclose automatically until the handle has been restored to the AUTO position.

3.2.3 Housing Details

The protector is mounted rigidly in the body of the housing. This part of the housing contains the mounting bosses, the rollout rails, the lifting lugs, the entrance bushings, the hinge details for the cover, the external operating handle and the provisions for mounting the housing. Transformer mounted housings have an opening in the back of the housing for mounting directly on to the low voltage throat of the transformer. Bus bars mounted in the housing connect the bottom of the protector to the transformer copper. Brackets are located near the rear bottom of the housing to provide additional support between protector and transformer. The separately mounted housing has four mounting lugs located two at the top and two at the bottom.

3.3 INTERLOCKS

The CM-22 network protector has two distinct mechanical interlocks which help provide for operator safety and promote proper equipment function.

WARNING

DO NOT ATTEMPT TO DEFEAT OR REMOVE ANY OF THE SPECIFIED INTERLOCKS. TO DO SO COULD CAUSE DEATH, SEVERE BODILY INJURY AND/OR EQUIPMENT DAMAGE.

3.3.1 Mechanism Bolt Shutter

(Refer to Fig. 9)

With the network protector outside operating handle in either the AUTO or CLOSE position, a shutter prevents an operator from gaining access to the red mechanism hold-down bolt. Once the handle is in the OPEN position, the shutter pivots downward permitting access to the red mechanism bolt.

3.3.2 Stationary Rail Interlock

A slot in the fixed rails prevents the unintentional rollout of the breaker from the enclosure if the operator fails to insert the moveable extension rails.

3.4 PROCEDURE TO SERVICE A CM-22 NETWORK PROTECTOR IF THE BREAKER FAILS TO OPEN

DANGER

READ THIS SECTION COMPLETELY BEFORE ATTEMPTING ANY EMERGENCY WORK ON THE NETWORK PROTECTOR.

IF THE BREAKER DOES NOT OPEN, IT BECOMES IMPERATIVE TO ISOLATE THE NETWORK PROTECTOR ELECTRICALLY FROM BOTH THE TRANSFORMER-SIDE AND THE NETWORK-SIDE POTENTIALS. UNDER THIS CONDITION THE ROLLEDOUT POSITION MUST NOT BE ALLOWED UNTIL ELECTRICAL ISOLATION ON BOTH SIDES IS ACHIEVED, THUS MAKING THE ROLLOUT UNIT COMPLETELY DEENERGIZED.

PERFORMING MAINTENANCE ON A CM-22 NETWORK PROTECTOR WITHOUT ISOLATING IT ELECTRICALLY CAN RESULT IN DEATH, SEVERE PERSONAL INJURY OR EQUIPMENT DAMAGE. DO NOT PROCEED UNTIL THE UNIT IS ELECTRICALLY ISOLATED. USE AN APPROVED DEVICE TO BE SURE OF THE ELECTRICAL ISOLATION BEFORE PROCEEDING.

DANGER

THE CM-22 "OPEN", "CLOSED" SEMAPHORE INDICATOR IS NOT DRIVEN BY THE CONTACT STRUCTURE BUT RATHER IS CONTROLLED THROUGH THE POSITION OF THE MECHANISM. HENCE, A SCENARIO CAN DEVELOP WHERE THE BREAKER CONTACTS HAVE WELDED/LOCKED CLOSED AND THE MECHANISM HAS TRIPPED. IN THIS SITUATION, THE SEMAPHORE WILL INDICATE "OPEN" BUT THE CONTACTS ARE CLOSED. A VISUAL CHECK OF THE RIGHT HAND PHASE, MAIN CONTACT STRUCTURE, WILL INDICATE THE TRUE BREAKER POSITION. THIS CHECK SHOULD BE PART OF YOUR STANDARD OPERATING PROCEDURE. A FAILURE TO VISUALLY CHECK THE TRUE BREAKER POSITION CAN CAUSE DEATH, SEVERE PERSONAL INJURY, OR PROPERTY DAMAGE.

3.5 OPERATING MECHANISM

The mechanism, auxiliary switch, relays, and other auxiliaries are assembled together in a unit at the front of the protector. This assembly is hinged at the right hand side and may be released and swung aside by releasing two captive bolts; one of these is at the left hand side of the mechanism frame and the other is at the left edge of the relay bracket. IT IS EXTREMELY IMPORTANT THAT THE BOLT ON THE MECHANISM IS SECURELY FASTENED BEFORE ANY ATTEMPT IS MADE TO CLOSE THE PROTECTOR EITHER MANUALLY OR ELECTRICALLY.

This bolt is painted red and a special nameplate mounted on the mechanism calls attention to this fact (See FIG. 9). The mechanism closes the circuit breaker by a pushing action only, there being no link or pin connection between the mechanism and the circuit breaker. The relays are mounted on special terminal blocks in such a manner that each relay may be readily removed without disturbing any permanent wiring. The mounting of the mechanism, relays, and auxiliaries together produces a clean and accessible circuit breaker and all devices are connected with a minimum of control wiring.

In normal operation on a network, the circuit breaker is closed by means of the motor and tripped by means of the shunt trip coil, both of which are controlled automatically by the relays and other auxiliaries. Rotation of the closing motor is always in the same direction and all resetting for the next operation is performed mechanically. When the motor circuit is energized for a closing operation, the rotation of the motor is transmitted through a worm gear to a crank carrying the closing roller at its outer end. Soon after starting to rotate, the crank engages the closing lever and carries it along, driving the toggle links toward a position of alignment. Motion of the toggle is confined to the middle and left links, the right hand link being held stationary by the latch. Before the middle link has reached the position for alignment with the stationary link, but after the middle and left links have passed over center, the roller on the closing crank passes out of engagement with the closing lever.

This leaves the main contacts, and the toggle which closes them, under heavy pressure which would instantly force open the breaker if it were not prevented by the latch. The latch in turn is held closed by a small latch toggle, which resets automatically by passing over center when the latch roller is in its lowest position.

A drum switch mounted on the crank of the motor closing mechanism serves to remove voltage from the motor when this crank reaches a position approximately 30° beyond the vertical position. When the crank has reached this position, the mechanism toggle is already safely in the latched position and hence the exact point of motor cut-off is not important and no adjustments are required. One pole of the auxiliary switch is connected in parallel with the drum switch just mentioned.

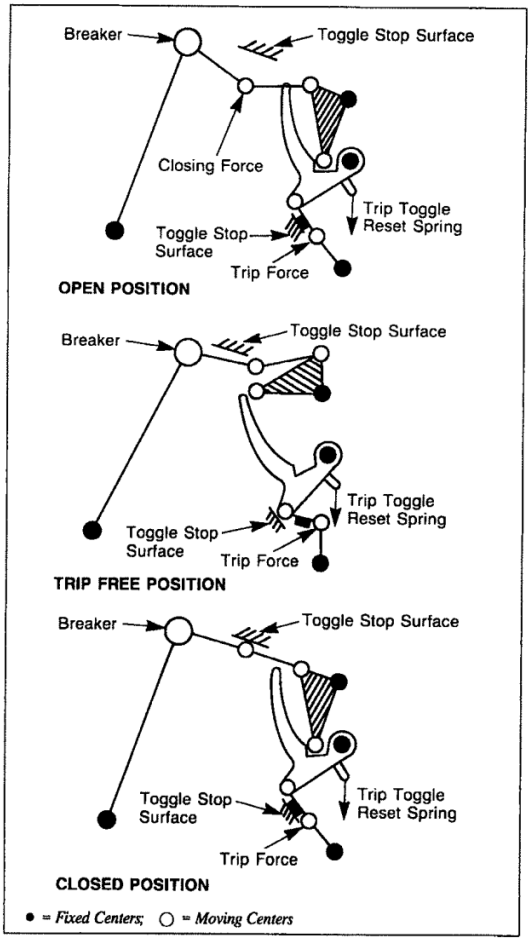

FIG. 10 *Simplified Diagrams of Operating Mechanism.*

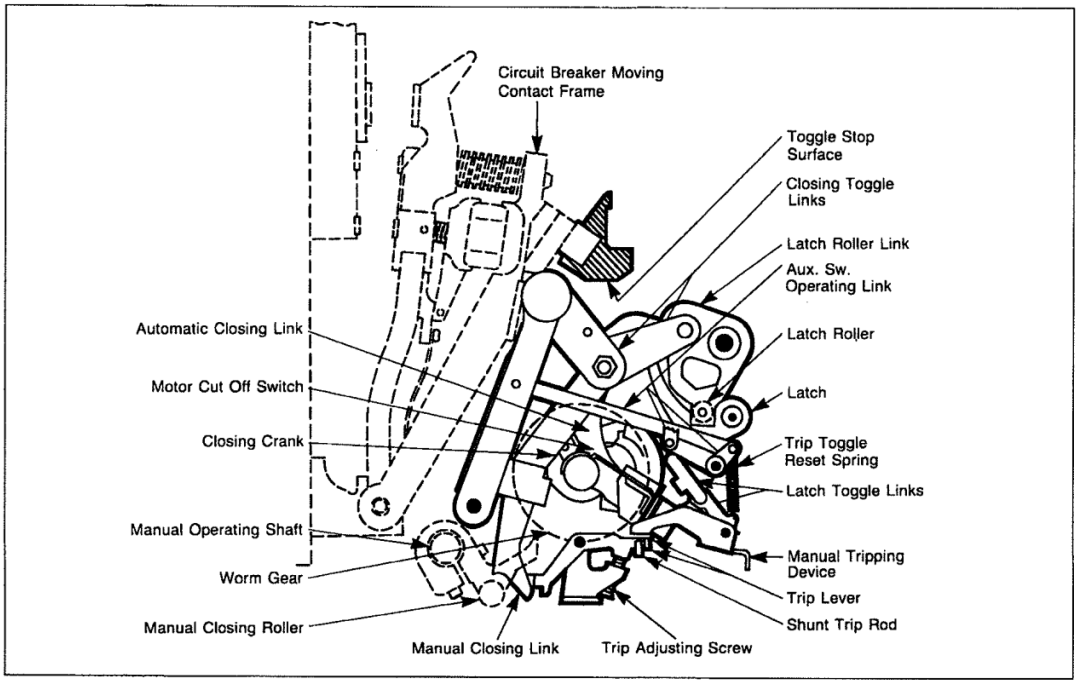

FIG. 11-a *Operating Mechanism - Protector Open*

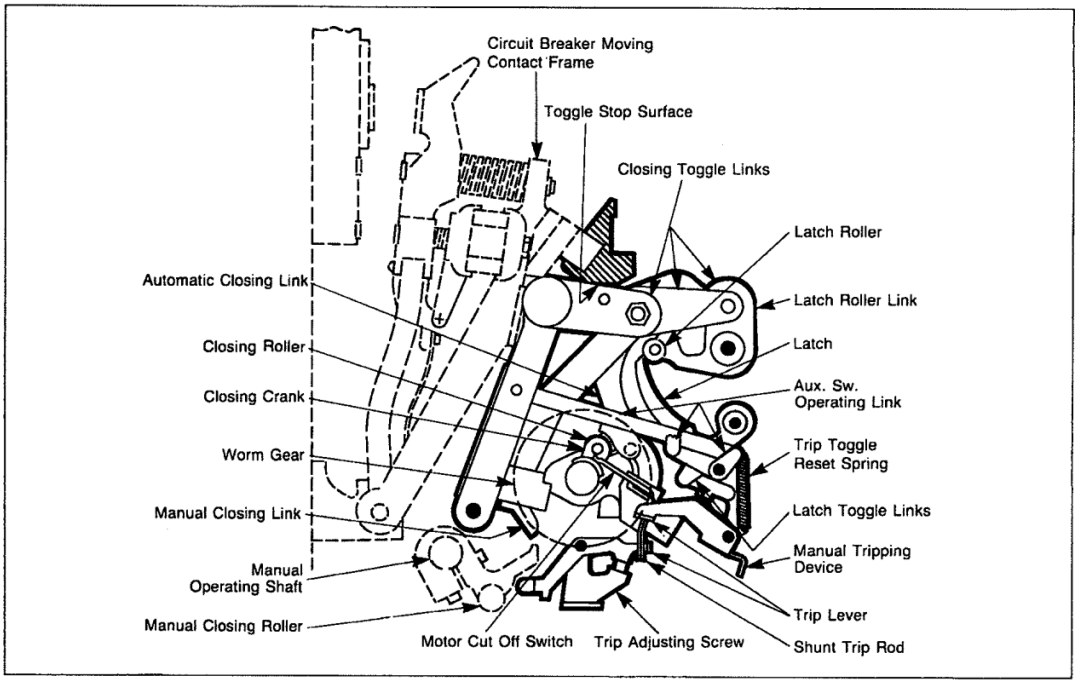

FIG. 11-b *Operating Mechanism - Protector Tripped Free*

I.B. 35-500-1E

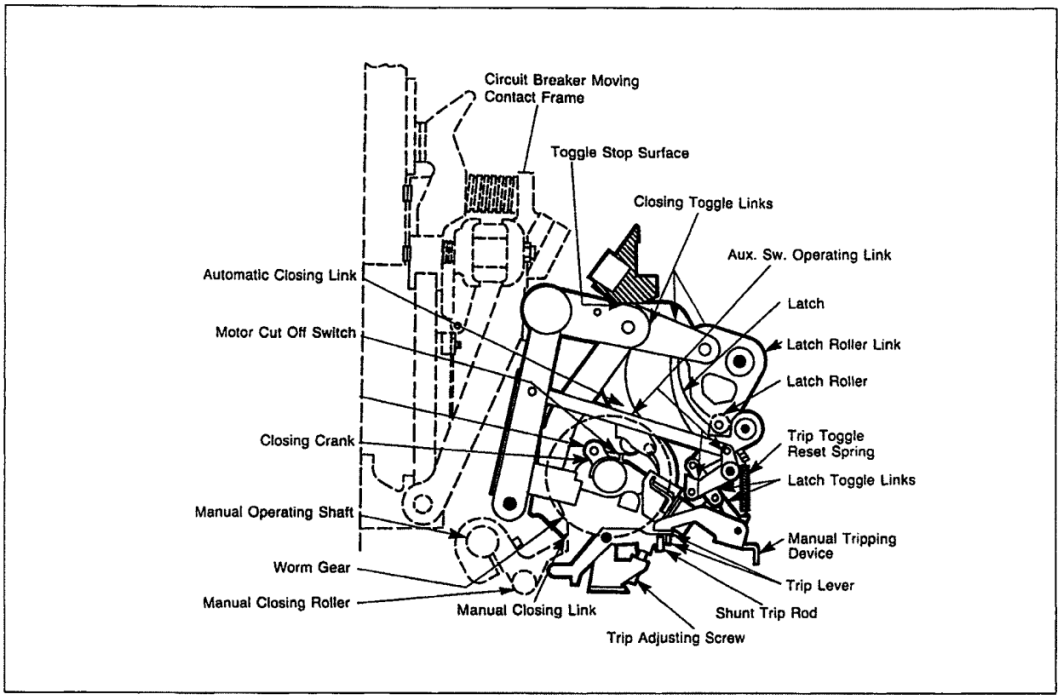

FIG. 11-c *Operating Mechanism - Protector Closed*

When the protector is tripped, this pole of the auxiliary switch makes contact. During the next protector closing operation it serves to complete the motor circuit until the drum switch makes contact. This auxiliary switch contact then opens well before the mechanism has closed and the cut-off of the motor is accomplished by the drum switch well after the mechanism has closed. The closing crank drifts approximately 45° beyond the point of motor cut-off. The exact stopping position of this crank is unimportant.

The three links in the main toggle have their center lines so located that the ends of the middle link move in opposite directions. When opening, the end links turn clockwise and the middle link counter-clockwise with reference to their shafts as seen from the side, shown in Fig. 11a. After tripping electrically, all of the links drop immediately to the position shown in Fig. 11a carrying the latch roller back to the reset position. This allows the latch to snap into place through the action of the helical spring supported between the latch and the latch toggle. Resetting for the next cycle of operations is then complete.

Fig. 11-b is included to show a typical momentary position of parts when the breaker is opening after tripping free while closing. There is no way of holding the mechanism in this position. Although the closing roller is shown in contact with the closing lever, the closing crank could be in the "off" position shown in Figs. 11a or 11c, as in ordinary shunt tripping, without changing anything else.

When the relay mechanism assembly is swung out, the mechanical connection between the operating mechanism and the circuit breaker ceases automatically. Since the mechanism operates the breaker simply by pressing on the movable contact frame or by releasing the pressure, it is not necessary to uncouple any parts when separating the operating mechanism from the breaker.

3.6 RELAY PANEL AND AUXILIARIES

Relays and auxiliary switches for controlling the operation of the breaker in response to circuit conditions are mounted on the same hinged assembly with the operating mechanism. Flexible cables, making the minimum necessary number of electrical connections between the terminal blocks, the control devices and the circuit being protected, are brought across the hinge point of the assembly. This arrangements permits free movements of the panel in and out on its hinges without putting any injurious stress on the conductors.

3.6.1 Main Auxiliary Switch

Two 4 pole type RC auxiliary switches are used as auxiliary contacts. Eight circuits are provided for, although they are not all used in the standard wiring arrangement. An optional third 4 pole auxiliary switch is also available. Contacts are made and opened by metal segments rotated between stationary fingers. Reference to the wiring diagrams, Figs. 12 and 13, will disclose the several opening and closing functions performed. Movement of the switch contacts is controlled by a mechanical linkage with the breaker operating mechanism.

Two auxiliary switch contacts, one "a" and one "b" connected to the network are normally brought out from the protector by means of a disconnect device located on the upper left hand side of the main panel. These circuits may be used for an interlock, remote position indication, or a supervisory system.

3.6.2 Closing Motor, Two Lead

The closing motor is a single phase commutator type vertical shaft motor with ball bearings. A single reduction of speed between motor and closing crank is made by a worm, coupled directly to the shaft of the motor, and a worm wheel mounted on the same shaft as the closing crank. Since the service does not require operation of the closing mechanism for any extended period of time, the motor is wound to develop an exceptionally high torque for its size. If operated too frequently for testing or similar purposes, the windings may overheat, but there is ample capacity for twenty consecutive operations. A centrifugal friction governor in the lower end bell prevents undesirably high speed on the upper range of voltage. The motor is tested for closing of the protector at 70% of the rated system voltage.

The friction governor built into the lower end of the motor is composed of two steel weights which act as brake shoes when the centrifugal force throws them out against the inner periphery of the small housing in which they are enclosed. The governor requires no adjustment and there is no brake lining material to wear out in this assembly. It is purely a speed limiting device. In some few instances surplus lubricant from the lower motor bearing may get onto the braking surfaces and cause the closing crank to travel abnormally far after the cut-off switch opens. If this condition is found, remove the brake drum and clean up the lubricant on the centrifugal weights and drum with a suitable solvent.

3.6.3 Closing Motor, Three Lead

The three lead motor is the same as the two lead motor except an additional common lead is brought out from the point between the armature and the field. This third lead is used to stop the motor electrically by momentarily short circuiting the armature through an adjustable 3 ohm resistor. The three motor leads are connected to a polarized four pole plug assembly for convenient disconnection for removal or replacement. The three lead motor has no mechanical brake assembly.

3.6.4 Shunt Trip Assembly

The shunt trip assembly unit, comprising the trip magnet with its coil, is mounted on a frame which also carries a trip lever, adjusting screw, and coil circuit contacts. The trip magnet is of the solenoid and plunger type with a stationary and a movable core. Adjustment of the screw fixes the position of the trip lever, which acts also as a stop for the latch toggle. Final adjustment of the set screw is made while the unit is in place on the mechanism.

While the shunt trip coil must operate satisfactorily at the maximum voltage of the circuit, it is designed to pick up positively at only 7½% of normal voltage. Normally any voltage high enough to pick up the movable core of the trip magnet is sufficient to drive the latch toggle over center and trip the breaker.

3.6.5 Manual Trip Lever

An extension of the shunt trip lever to the front of the mechanism frame forms a convenient manual tripping lever. Pressure on this part trips the breaker.

3.6.6 Auxiliaries

The motor circuit is controlled by a motor starting contactor, which in turn is controlled by the master and phasing relays, and also by the cutoff switch of the mechanism. The closing of the "closing" contacts of the relays energizes the coil of the contactor, which then closes its contacts. The closing of these contacts serves to close the circuit of the motor, and as soon as the drum switch on the crank makes contact, it seals the contactor in the closed position independently of the positions of the network relay contacts. The motor then closes the protector, and after the mechanism latches, the cutoff switch is opened, thus opening the contactor.

An operation counter is mounted at the front of the protector where it is visible through the window in the enclosure.

3.6.7 Position Indicator

"Open" and "Closed" positions of the breaker are identified by a position indicator that gives either a mechanical or colored light indication. For mechanical indication the words "open" and "closed" on a semaphore flag give the position indication. One word or the other is visible from the front of the protector depending on the breaker position. The colored light indication is obtained by mounting a small clear lamp behind colored lenses in the semaphore flag. When the protector is open the green lens is in front of the lamp, and when the protector is closed, the red lens is in front of the lamp.

On protectors 1875 ampere rating and below, a rawhide bumper on the mechanism acts as a stop for the moving contact assembly and keeps the shock of stopping the moving contact assembly from the toggle links of the mechanism when the protector opens. On the larger frame breakers (2000 amp and above), this rawhide bumper is replaced by an air dashpot assembly to limit re-rebound of the moving contact assembly when the breaker opens.

The operation and theory of the electro-mechanical master, phasing and de-sensitizing relays is completely covered by I.B. 35-580A for CN-33, CNJ and BN relays. The operation of the solid-state network relay is covered by I.B. 35-581A for MPCR relay.

3.7 OPERATING SEQUENCE

3.7.1 Closing Cycle

A closing cycle consists of the following sequence of operation:

1. The master relay closing contacts and if applicable the phasing relay contacts close, thereby completing the circuit to the coil of the motor starting contactor.

2. The contactor picks up its armature thereby closing its contacts.

3. The motor, being energized by the contactor, then rotates the closing crank to a point where the associated drum switch closes its contacts, thereby electrically sealing the contactor closed independent of the master relay, phasing relay or auxiliary switch contacts.

4. As the motor mechanism passes into the latched position, the drum switch opens the circuit of the contactor operating coil, and the auxiliary switch closes in the circuit of the shunt trip coil. The closing of the shunt trip circuit is in preparation for the tripping of the circuit breaker at some future time.

5. The opening of the contactor opens the circuit of the motor, thereby removing it from the line.

3.7.2 Tripping Cycle

A tripping cycle consists of the following sequence of operations:

1. The master relay closes its tripping contacts (due to the system conditions prevailing), thereby closing the circuit through the shunt trip coil.

2. The opening of the circuit breaker and mechanism returns the auxiliary switches to their original position, thereby opening the circuit of the shunt trip coil and closing the circuit of the motor closing contactor, preparatory to the next closing operation.

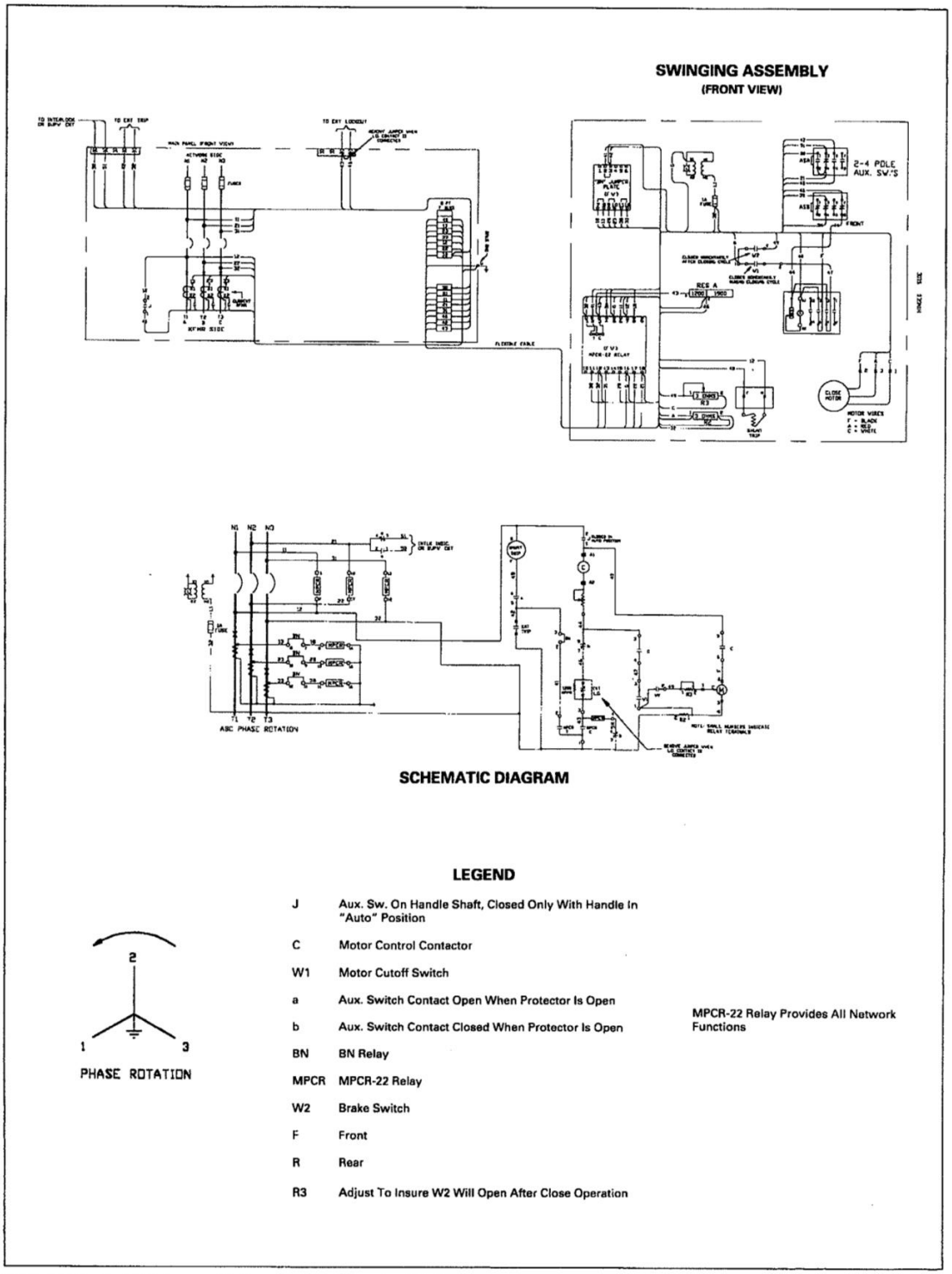

FIG. 12 *Typical Wiring and Schematic Diagram for 125/216 Volt Three-Phase Four-Wire System with Three Lead Motor.*

I.B. 35-500-1E

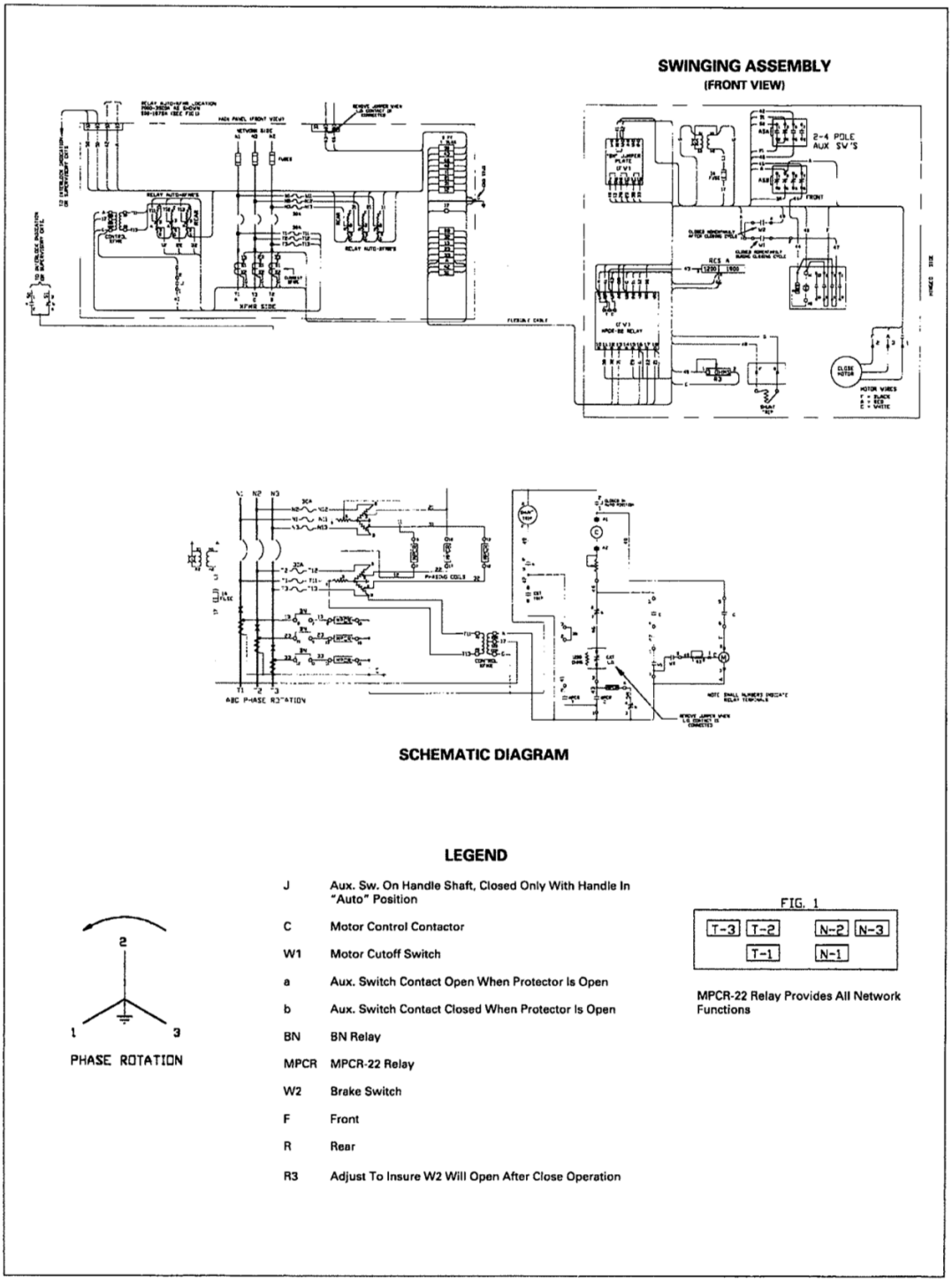

FIG. 13 *Typical Wiring and Schematic Diagram for 277/480 Volt Three-Phase Four-Wire System with Three Lead Motor.*

I.B. 35-500-1E

SECTION 4 — MAINTENANCE

4.1 INSPECTION

Note: Review SAFETY INFORMATION on pages 3 and 4 before any inspection is performed.

Annual inspection and testing of CM-22 protectors is recommended for maintaining the protectors in the best operating condition. The shortest and most reliable procedure will be to first make a mechanical inspection and then make electrical tests of the protector operation. The procedure should include an overall operating test to precede replacing the protector in service; this is important in order to ensure that the protector is in the proper operating condition.

Note: A record of maintenance on each protector should be kept and should include "date", "operation counter reading", "condition found", and "work performed".

With the aid of a network protector portable test kit, complete electrical tests and relay calibrations may be made readily on the protector in the field. It is recommended that parts which function incorrectly, especially relays, be returned to the laboratory for any necessary repairs or adjustments. For description of methods of adjustment on the relays refer to the relay instruction book I.B. 35-580A for electro-mechanical relays and I.B. 35-581A for solid-state relays.

WARNING

BEFORE MAKING ANY INSPECTION OR TEST OF THE PROTECTOR OR RELAYS, IT IS IMPORTANT TO ISOLATE THE PROTECTOR FROM THE TRANSFORMER AND NETWORK FOR SAFETY DURING THE PROCEDURE. REFER TO PARA. 3.4. THE ISOLATION IS ACCOMPLISHED BY PLACING THE OPERATING HANDLE IN THE OPEN POSITION AND FIRST REMOVING THE LINKS FROM THE TRANSFORMER SIDE AND THEN THE FUSES FROM THE NETWORK SIDE OF THE PROTECTOR. NOTWITHSTANDING THIS PROCEDURE, WORK SHOULD BE DONE CAUTIOUSLY SINCE IT MUST BE ASSUMED THAT THERE IS VOLTAGE ON THE NETWORK LEADS, AS WELL AS THE TRANSFORMER LEADS. FOR DETAILED PROCEDURE, REFER TO PARA. 3.1.

WARNING

LOCK PROTECTOR IN OPEN POSITION, AND VERIFY THAT THE PROTECTOR IS OPEN AND DE-ENERGIZED BEFORE INSPECTION. FAILURE TO HAVE THE PROTECTOR IN THE OPEN AND DE-ENERGIZED POSITION COULD RESULT IN DEATH, SEVERE PERSONAL INJURY OR PROPERTY DAMAGE.

4.1.1 Circuit Breaker - Inspection

1. See that all electrical connections are tight.
2. See that all springs are in their proper places and that none are broken.
3. See that all nuts, pins and screws are in place and tight.
4. Check all current carrying parts for evidence of overheating.
5. See that all circuit-breaker contacts are clean and make good contact.
6. See that, when the breaker operates, the arcing contacts make contact before the secondary contacts and that the secondary contacts make before the main contacts.
7. Check all barriers and see that none are broken.
8. Check all connections on the terminal blocks and see that all are tight.

4.1.2 Relay and Mechanism Frame - Inspection

1. See that all electrical connections are tight.
2. See that all springs are in their proper places and that none are broken.
3. See that all nuts, pins and screws are in place and tight.
4. See that bumper is intact and extends above its socket.
5. Make certain that the red mechanism bolt is tight before operating the protector.
6. With the breaker open there should be a minimum of 1/64-inch clearance between the roller mechanism and the bearing plate on the moving contact assembly.
7. Check all barriers and see that none are broken.
8. Check the motor control relay and the cutoff switch to see that they are making good contact.

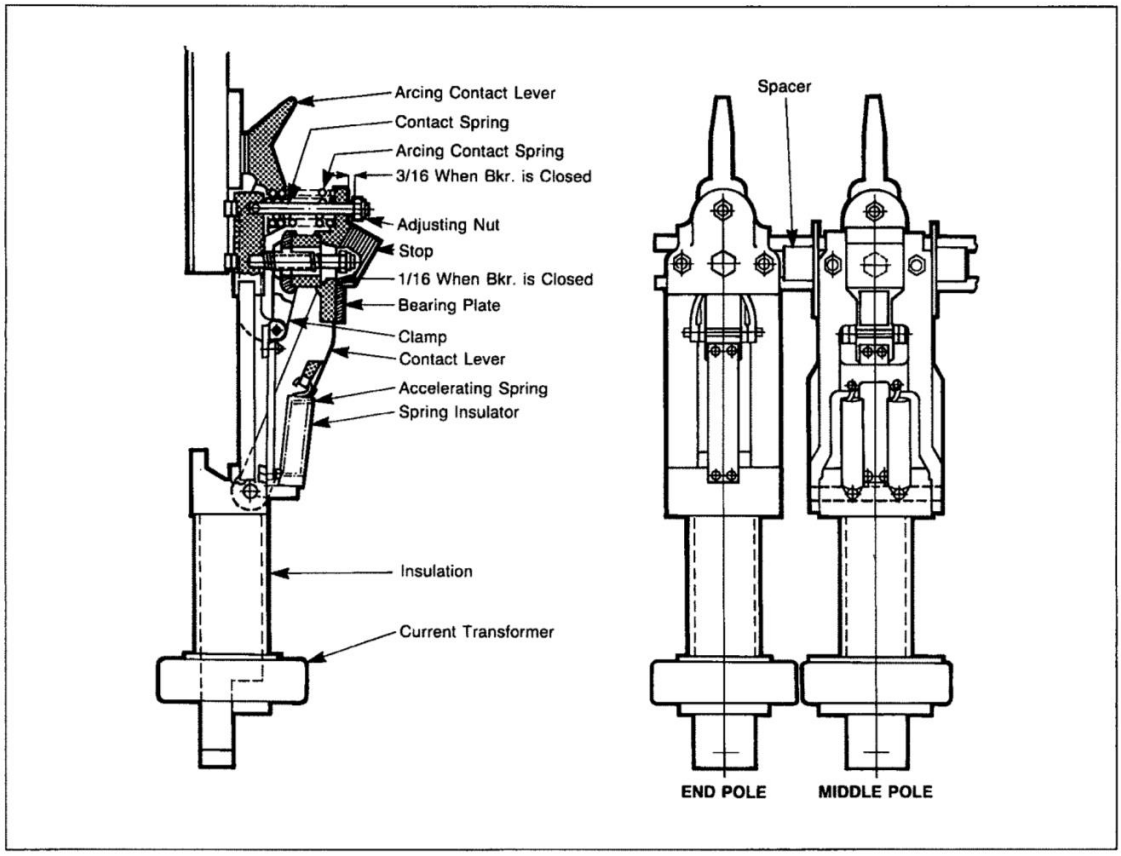

FIG. 14 *800-1875 Ampere Moving and Stationary Contact Assembly*

4.1.3 Enclosure - Inspection

1. See that all electrical connections are tight.
2. Check the fuses, links and terminals for evidence of overheating. If lead-alloy fuses are used, check for proper tension at the alloy element. (Refer to Para. 5.5.3)
3. Check enclosure parts for corrosion.
4. Check all barriers to see that none are broken.
5. Check the housing for watertightness.

4.2 MAINTENANCE

Note: Review SAFETY INFORMATION on pages 3 and 4 before any maintenance is performed.

4.2.1 Stationary and Moving Contacts 800 to 1875 Amperes Inclusive

1. *Flexible Connectors.* The flexible connectors to the main contacts should require little attention except that care should be taken to see that they are not damaged mechanically in any way. The design of these connectors is such that they have long life and hence replacements should be required only in very rare instances.

2. *Main Contacts.* It is important that the main contacts at all times be in good condition; a little attention, well directed, will keep them in good condition. The contacts should be protected from dirt and erosion.

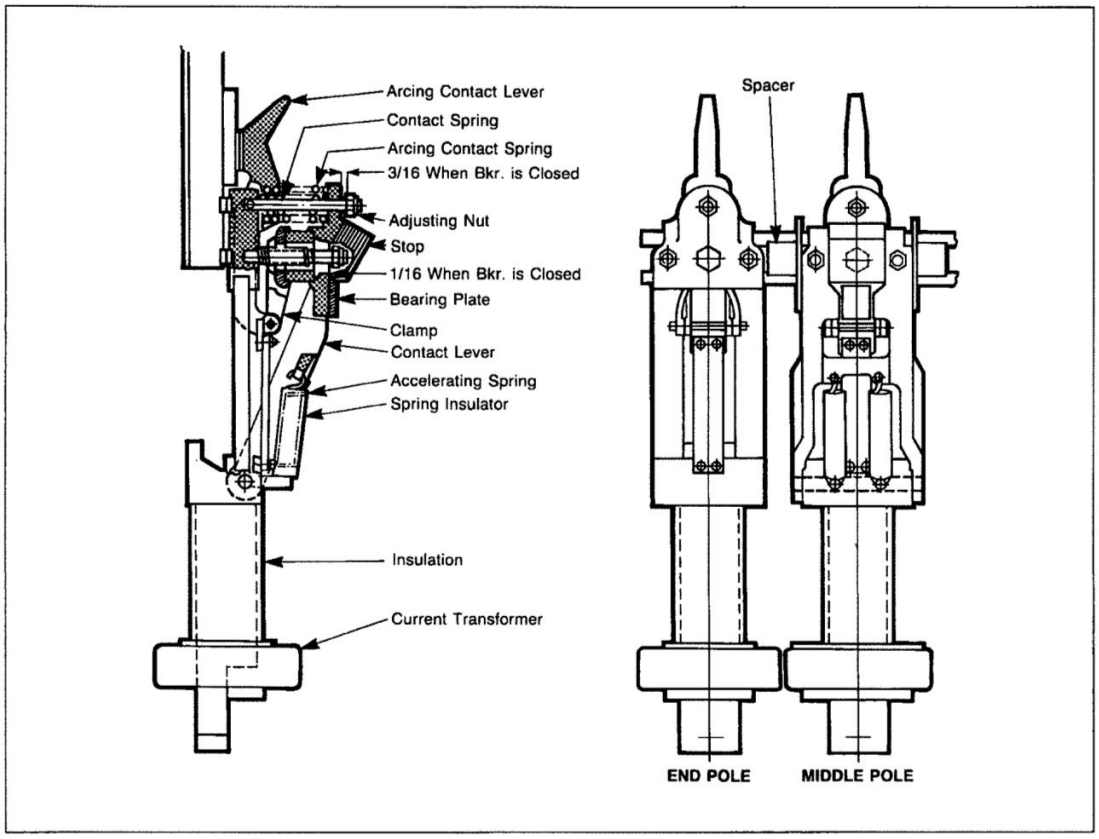

FIG. 14 *800-1875 Ampere Moving and Stationary Contact Assembly*

4.1.3 Enclosure - Inspection

1. See that all electrical connections are tight.
2. Check the fuses, links and terminals for evidence of overheating. If lead-alloy fuses are used, check for proper tension at the alloy element. (Refer to Para. 5.5.3)
3. Check enclosure parts for corrosion.
4. Check all barriers to see that none are broken.
5. Check the housing for watertightness.

4.2 MAINTENANCE

Note: Review SAFETY INFORMATION on pages 3 and 4 before any maintenance is performed.

4.2.1 Stationary and Moving Contacts 800 to 1875 Amperes Inclusive

1. *Flexible Connectors.* The flexible connectors to the main contacts should require little attention except that care should be taken to see that they are not damaged mechanically in any way. The design of these connectors is such that they have long life and hence replacements should be required only in very rare instances.

2. *Main Contacts.* It is important that the main contacts at all times be in good condition; a little attention, well directed, will keep them in good condition. The contacts should be protected from dirt and erosion.

In case the silver contacts become pitted, they must be made perfectly smooth before being placed in operation. Minor pitting may be repaired by a skilled workman using a very fine file or crocus cloth, but extreme care must be exercised to see that the surfaces are left smooth and straight. After the protector has opened a severe fault, it is recommended that all contact surfaces be inspected and repaired as found necessary. Dirty contacts must be cleaned so that burning does not result.

3. *Arcing Contacts.* The circuit-breaker arcing contacts are of an arc-resisting metal and should last the life of the protector. These contacts must have a substantial initial spring tension. When the breaker is opening, the arcing contacts must remain in contact until the main contacts of the circuit breaker are approximately 3/16 inch apart; when closing, they must make contact at the same point. This clearance distance is affected by the adjustment of the contact adjusting nuts, which produce the initial spring deflection of the spring behind the alloy contacts. After a severe interruption, the arcing contacts may require dressing up.

4.2.2 Stationary and Moving Contacts 2500 and 3500 Ampere

1. *Blades.* The 2500 and 3500 ampere units have moving contacts of the hinged blade construction. The contact surfaces on the blades are serrated in the direction of motion and should require no maintenance. The contact surfaces on the stationary contact which match up with the blades should be kept perfectly flat and smooth at all times. Minor pitting may be repaired using a very fine file or crocus cloth.

2. *Graphite Grease.* A light coating of graphite grease is applied to the upper and lower end of the blades to reduce friction. The coating of grease applied at the factory should last the life of the protector. If grease is applied, use sparingly, since it is a conducting material and may be harmful if splattered around the moving contact assembly.

3. *Arcing Tips.* The arcing tips are made of a special arc resistant metal. After a severe interruption the arcing contacts may require dressing up.

4.2.3 Fuses.

1. Whenever the links or fuses are replaced in a protector, care should be taken that all contact surfaces are in good condition and that good electrical contacts are made. The surfaces must be smooth and clean and securely clamped. The clamping hardware for fuses is captive, consisting of a steel nut, washer and lockwasher as a unit assembly. Make certain that all connections are tight. Torque to 50 ft-lbs. for all ½ inch studs and hardware.

2. In case a fuse has blown, any deposits from the fuse must be removed. The deposits left by the melting of an alloy or copper fuse are conducting, and must be removed, and the circuit breaker parts cleaned as found necessary.

3. The fuses at the upper end and the line-contact disconnect links at the lower end connect the breaker unit to the protector terminals. The contact surfaces to which these links and fuses bolt should be lined up to assure a good contact and to prevent undue stress in the fuses. The fuse mounting surfaces should be parallel and displaced from each other by not more than 1/32 inch. Check tension of alloy fuses per Para. 5.5.3.

4. The "De-ion" arc chamber requires no maintenance beyond periodic inspection to see that the path between the splitter plates is kept open, particularly on non-submersible protectors.

5. A switch which is in the motor closing circuit is located on the hand operating shaft near the lower left hand corner of the main panel. The switch should make contact only when the handle is placed in the AUTO position. No adjustment is required on the switch but it should be inspected periodically to see that the contacts are in good condition.

4.2.4 Main Barrier

The main barriers of the circuit-breaker, which segregate the poles in the vicinity of the fuses and "De-ion" arc chutes are built in units and may be removed by removing two retaining bolts. AN ENERGIZED PROTECTOR SHOULD NOT BE OPENED OR CLOSED WHILE THE BARRIERS ARE REMOVED. Fixed barriers are located at other points for the purpose of protection to workmen while working on or around the protector, or for protecting vulnerable parts of the protector at times of severe circuit interruption.

4.2.5 Current Transformers

The current trransformers on the pole units operate in conjunction with the master relay to trip the protector on reverse power flow. The secondary current of these

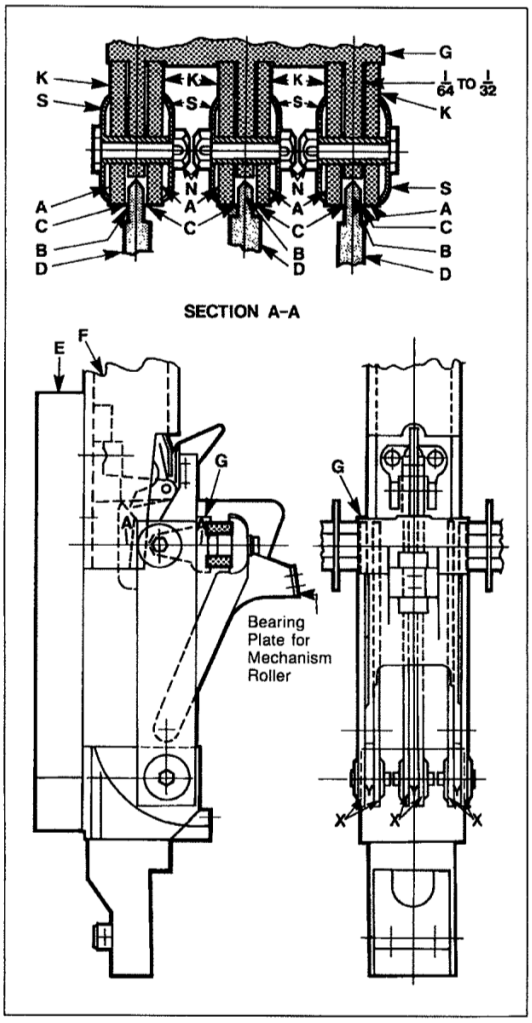

FIG. 15 *2500 and 3500 Ampere Moving and Stationary Contact Assembly*

current transformers at normal full load of the protector is 5 amperes. For a given type of relay the current transformers for the various ratings of protectors are so designed that a relay with a given setting will have the same setting (in percent of CT primary) for any ampere rating protector on which it may be mounted.

It is essential that the current transformers be connected with proper polarity in all cases. The current transformers carry a white mark on one face adjacent to one of the secondary terminals. This mark indicates the polarity terminal for both the primary and the secondary. The mounting of the current transformer in the protector is always with this white mark toward the top of the protector.

For the proper connection of the secondary terminals of the current transformer, reference should be made to the diagram received with the order, since the particular connection will vary depending on whether the top or the bottom terminals of the protector will be connected to the network. With electro-mechanical relays, one side of the current transformer secondary is usually connected to the copper conductor on which the transformer is mounted, and this portion of the circuit then becomes common to the current and phasing circuit of the master relay.

4.2.6 Miscellaneous

On protectors where an air dashpot is used to decelerate the moving contact assembly during the opening stroke of the breaker, the dashpot should be inspected annually to see that it is working properly. A light oiling and cleaning may be required to keep the dashpot in correct working order.

There is no part of the operating mechanism which should require lubrication other than the original lubrication given at the factory.

The motor brushes have long life and should require renewal or attention only after extended periods of service. Annual inspection is recommended.

The shunt trip and two lead closing motor assembly units are arranged very much alike. To remove either unit, first unscrew the two captive hexagon head bolts which have their heads projecting below the edge of the frame of the unit. The unit can be withdrawn downward and the electrical connections will part automatically at the double pole butt-contact connector. On three lead motors, a separate polarized 4 pole connector must be first disconnected from the base located on the mechanism frame before removing the motor.

When replacing the shunt trip, make certain that the trip lever on the shunt trip unit assembly is seated properly beneath the trip lever on the mechanism assembly. This assembly is made easiest when the relay

panel is swung away from the circuit breaker unit and the manual trip lever in the front of the mechanism is depressed.

When replacing the closing motor unit see that the half of the coupling which is at the end of the motor shaft is turned to a position in which it will enter the half on the worm shaft. If either the motor or the shaft to which it is coupled is rotated manually, be sure the direction of rotation is as shown on the motor. Reverse rotation of the motor will cause the mechanism to jam and break the key which fastens the worm gear to the worm gear shaft.

Located inside the motor mechanism and mounted on the worm gear shaft is the motor cut-off switch. This switch requires no adjustment but should be inspected periodically to make certain that the contacts are in good working order. Failure of this switch to maintain good contact during a closing stroke can cause the protector to stall in the partly closed position and thus be damaged due to over-heating caused by lack of contact pressure.

The auxiliary switch located in the upper right hand corner of the relay panel should require no maintenance during the life of the protector. A wiping action between contacts during the operation of the switch tends to keep these contacts clean and in good working order.

The auxiliary motor control contactor should require little care beyond periodic checking of the contact surfaces to see that adequate contact is maintained.

In general, the circuit breaker and relay panel parts should require less attention on submersible units than on non-submersible units. On submersible units, dust and dirt particles are less likely to get into the working parts of the protector and consequently longer life will result.

4.3 SUBMERSIBLE HOUSING

The paint finish on the housing should at all times be kept in good condition to prevent corrosion. In case the finish becomes noticeably marred or removed it should be suitably repaired with rust resisting paint.

4.3.1 Leak Testing

It is recommended that each submersible protector be inspected regularly for leaks. For the usual installation a yearly inspection is recommended, with more frequent inspections for those locations subjected to frequent submersion.

On new installations or after a gasket has been replaced, a retightening of door bolts should be made in about six or eight weeks, followed immediately by a test for leaks. Further tightening of gasket joints should be made as required.

1. The test for leaks is an internal air pressure test from three to seven pounds per square inch, depending on the method of procedure. A test pressure of three pounds may be placed in a cold protector and allowed to stand for twenty-four hours with the protector placed in service during the test period. The twenty-four hour load-cycle may generate sufficient heat to raise the internal pressure another three pounds, making the total pressure approximately six pounds per square inch. **Pressures greater than seven pounds should not be allowed to remain in the housing for any appreciable length of time.** Leaks are evidenced by drops in pressure during the twenty-four hour period. However, air may escape from the protector through the strands of connected cables and this fact must always be considered in making the twenty-four hour test. The short time test at seven pounds pressure, using soap-water as a leak indicator at all joints, is satisfactory for determining the location of any leaks.

2. The usual pressure testing outfit consists of the following:
   Bottled nitrogen.
   Pressure reducers, gauges and connections.
   Soap-water and brush.

3. Each submersible housing is equipped with either an air test device or a tapped hole to receive a pressure test connection. There are three types of test valves which can be supplied with the protector namely; Schrader, Belknap 994 and Waterbury 325. The Belknap 994 test valve is operated by a Belknap 994-0 valve which automatically opens the valve as it is screwed in place. The 994 valve is equipped with a fine screw thread and remains locked in place automatically. The Belknap 994-0 connector is equipped with an outlet for rubber hose connection.

   The Waterbury 325 value is sealed by means of two tapered surfaces, one in the plug cap and one in the main body of the valve. To unseal, unscrew the large hexagonal nut until it backs up tightly onto the underside of the small hexagonal cap nut. A further careful backward turn will then release the tapered seal and remove the plug cap assembly. When

reassembling the cap nut assembly to the main body of the valve, all threads must be clean and the tapered sealing surfaces must be clean and well lubricated. The plug cap is then hand tightened onto the main valve and a further one-eighth to one-quarter turn with a wrench will then seal the valve. The operating device for the Waterbury 325 test value is the Waterbury 315 valve which is screwed on to the 325 test valve.

4.3.2 Gasket Materials

In general, three different gasket materials are used at various places on the housing as follows:

Material	Application
1. Neoprene	Housing Cover Inspection Windows Hand Operating Flange
2. Molded Composition Packing	Operating Handle Shaft Gland
3. Nitrile Rubber	Entrance Bushing Flanges

The Neoprene cover gasket is an extruded round synthetic rubber tubing, which is oil and solvent resistant, colour black, 3/8 inch I.D. and 1 1/4 inch O.D. It is intended that the housing cover may be opened and closed a large number of times before Neoprene gasket renewal is required. Lubriplate 130A should be used between the gasket surface on the housing and the Neoprene gasket to prevent sticking.

The Nitrile rubber bushing gasket is a black heat-resistant synthetic rubber, shore hardness 65, in 3/8 x 3/8 inch cross-section, retained in a slot on the base of the bushing flange inside the perimeter.

4.3.3 Threaded Plugs

It is usually desired to have threaded plugs easily removable and hence it is recommended that such plugs be screwed in place with Teflon tape. This procedure makes a tight seal, and the plugs are easily removed.

4.4 REPLACEMENT OF COVER GASKET AND REVERSAL OF HANDLE

(Replacement of cover gasket and adjustment of cover on a quick opening housing with sliding hinge centers.)

4.4.1 Gasket Replacement

1. The cover may be removed from the housing so that the work may be done more readily since no centering adjustments are disturbed by removing the cover. Referring to Fig. 17, take out the cotter pins and the stop nuts "A" on the bolts "C" on the hinged side. The hinge bolts should be loosened first about ½-inch so that when the bolts "D" on the opening side are loosened, all gasket pressure is released before any bolts are completely removed. The removal of the clamping and hinge bolts from the blocks "E" will then free the cover from the housing.

2. Remove the old gasket and clean the steel bearing surfaces on the cover and housing so that these surfaces are free from dirt, lumps of paint and particles of old gasket.

3. Cut the gasket length 8 to 10 inches oversize. Cut the ends of the gasket in a smooth plane at right angle to the axis of the gasket. Start by applying a light coating of lubriplate 130A to the gasket retainer channel. The gasket is initially tacked into position at about 10 points on the 4 corners and 4 sides with some excess between each point. Each loop should be about the same length. The two ends of the gasket should be located near the center of one of the long sides of the cover and are inserted last. The gasket is inserted at each tacking point preferably with the aid of a tool such as wide nosed pliers.

   Take care when inserting the gasket so that in its final position the gasket is free from twist, waves or tool marks. Continue by inserting the center points only of each loop around the circumference of the door. Repeat this procedure 2 or 3 times as necessary to completely insert the gasket into the retainer. The ends of the gasket are inserted last. Take about 8 to 10 inches at each end of the gasket so the flat ends can be butted together and inserted into the retainer. No cement or seal is necessary on the ends. The gasket length is 8 to 10 inches in excess of the door circumference and is in compression to ensure a reliable seal. After the gasket is completely inserted as described above, pound it around the entire circumference with a heavy rubber mallet to ensure it is securely in place in the retainer channel.

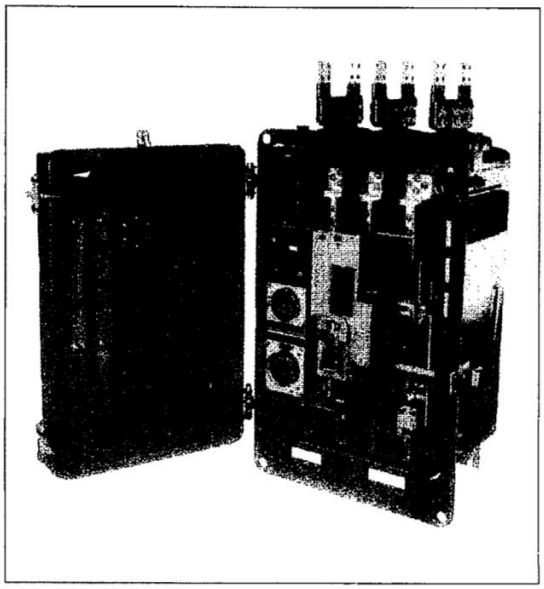

FIG. 16 *2500-Ampere Submersible Housing with Sliding Hinge Centers.*

4. Cover the exposed portion of the gasket with Lubriplate 130A to keep the gasket from sticking to the housing.

5. Reassemble the cover on the housing and tighten bolts "C" and "D" until the housing is watertight. Take the bolts down evenly to obtain a uniform deflection of the gasket. A torque of 300 pound inches on the bolts should be sufficient to obtain a watertight seal on the cover gasket.

6. On the hinged and opening sides of the housing, stop nuts "B" are run against the support block "E" on the housing and the two nuts are jammed together to act as a stop for the bolts. Stop nuts "A" are now assembled on the hinge bolts "C" allowing space between nuts and block "E" so that there is sufficient bolt movement available to release the gasket pressure on the hinged side.

7. Replace the cotter pins on hinge bolts "C" to prevent accidental removal of these bolts.

4.4.2 Adjustment of Gasket

When a cover needs additional tightening for watertightness, loosen the stop nuts "A" and "B" and proceed as in 5 and 6 above.

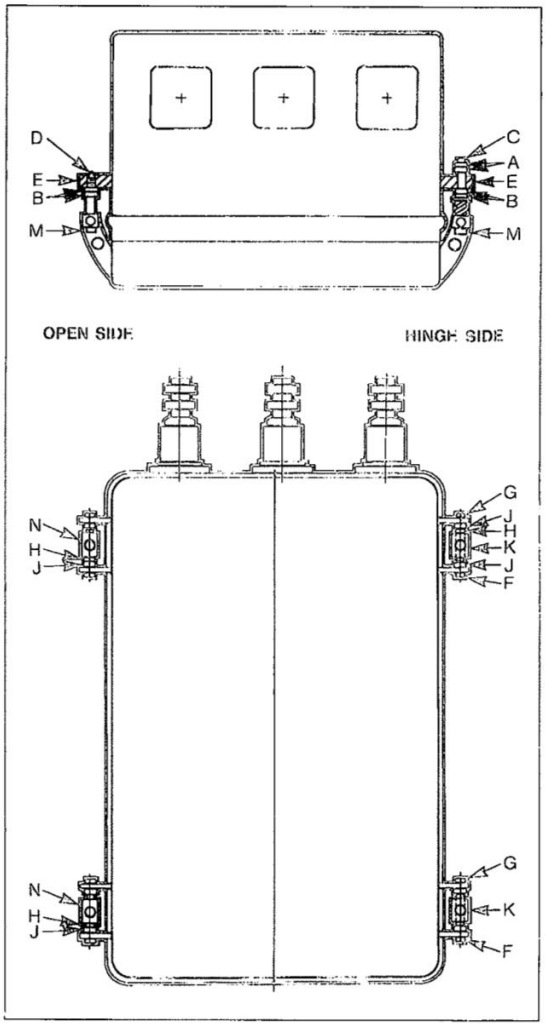

FIG. 17 *Sliding Hinge Details*

4.4.3 Centering the Cover on the Housing

If for any reason it becomes necessary to center the cover on the housing proceed as follows:

1. Set the cover guides inside the housing so they will support the cover in the correct vertical position.

2. Slide the cover horizontally until it is in the correct position.

3. On the hinged side of the housing the subassemblies, each consisting of the hinge bolt "C", the hinge

block "K", the spring and the two stop nuts "B", are threaded into support blocks "E" on the housing until lower pivot pins "F" can be inserted. The upper pivot pin "G" must have the correct number of spacing washers "H" between nut "J" and hinge block "K" to support the cover in the correct position vertically. The pivot pins "F" and "G" are now clamped in place by tightening nuts "J". With all pivot pin assemblies on the hinged side in place and securely tightened, the cover may be swung several times to see that its location is correct on the housing. If necessary the pivot pins "F" and "G" can be moved horizontally by sliding these pins in the slot in the hinged bracket "M". Vertical adjustment is provided by the spacing washers "H".

4. The clamping bolts on the opening side of the housing may now be assembled in a manner similar to the one used on the hinged side. The bolt should be positioned to enter the tapped hole in the housing support block "E" as freely as possible. Vertical adjustment of these bolts is obtained by means of washers inserted at the lower end of swivel block "N".

5. The stop nuts may now be set as previously described.

4.4.4 Reversal of Hinged Side of Cover

To reverse the hinged side of the cover, the detachable assemblies mounted on hinge brackets are interchanged from one side to the other. Remove the cover from the housing and the pivot pin assemblies from the cover and proceed as described in "Centering the cover on the housing", Para 4.4.3.

4.4.5 Operating Handle

The packing gland for the shaft of the hand operating mechanism should require little attention since it is seldom used. Occasional tightening of this gland to compensate for compression set in the gaskets may be required to keep a watertight seal.

4.4.6 Reversal of Handle

To change the operating handle of the housing from one side to the other, proceed as follows:

1. Remove the operating handle from the housing auxiliary shaft by removing the bolt which fastens the two members together. See FIG. 18.

2. The circuit breaker unit is then dismounted from the housing and the housing auxiliary shaft removed from the housing.

3. Change the tongue end of the shaft from one side to the other on the circuit breaker.

4. The handle packing gland details consisting of the locking piece, gland, bearing, packing, and auxiliary shaft are removed from the operating handle side and the dummy plate is removed from the plug side.

5. The operating handle details and dummy plate are interchanged from one side of the housing to the other and re-assembled.

6. Assemble the operating handle to the housing.

7. Make certain that all gasket and gland connections on the operating handle and dummy side are watertight.

4.5 NON-SUBMERSIBLE HOUSING

Non-submersible enclosures require little attention except to see that the finish on the enclosure remains in good condition and that none of the barrier material is broken or damaged.

4.6 ADJUSTMENTS

Note: Review SAFETY INFORMATION on pages 3 and 4 before any adjustments are performed.

4.6.1 Circuit Breaker, 800 to 1875 Amperes Inclusive

1. For satisfactory operation of the circuit breaker, all contacts must be in good contact and be under full pressure. To be sure of these conditions, it is necessary that the circuit breaker be closed to the proper point, which condition exists when the main contact spring is compressed 1/16 inch after the main contacts first touch. At the same time the transfer contact springs should be compressed 3/16 inch beyond the position where the tips first touch. See Fig. 14. It is important that these contact adjustments be maintained, not only in order that

there shall be suitable pressure, and freedom of contacts to seat properly, but also to assure correct sequence of parting of main and arcing contacts. It is necessary that the adjusting nut for the main contact spring be so set as to have 1/16 inch clearance when the circuit breaker is latched closed (in which position the contact spring should be compressed 1/16 inch beyond its initial compression).

4.6.2 Circuit Breaker, 2500 and 3500 Amperes.

1. The 2500 and 3500 ampere CM-22 network protectors have a blade type contact construction as shown in FIG. 15.

   There are three pairs of moving blades for each phase that engage three contact members "D" on the stationary conductor "F" when the contacts are closed.

2. The contact pressure is provided by means of spring washers "S", one on the outside of each moving blade. Adjustments in this pressure are made by tightening or loosening a nut and bolt on the outside pairs of blades and two nuts on the center blades. A castellated nut or elastic stop nut is used which can be locked to the bolt or stud with a cotter pin after final adjustments have been made.

3. After the contacts have been aligned properly, and have been set at the proper pressure, the stationary and moving conductors "F" and "H" are doweled to the panel "E" to prevent any subsequent movement. In view of this, no adjustment of these conductors should be necessary in the field.

4. If for any reason the contact pressure must be set in the field, it is necessary first to make sure that the three castings "G", are properly located and securely fastened to the cross-bar. Proper location of these castings on the cross-bar consists of maintaining the 1/64 to 1/32 dimension between the blades "K" and the casting "G" shown in section "AA". After this has been done, the contacts should be checked with .0015 feeler gauge. If this feeler is inserted between the moving and stationary blades at point "C", it must not enter for a length more than ½ inch. This still leaves approximately 1½ inch contact. A slight increase in contact pressure will close this gap when necessary.

   Following this, the contact pressure on each individual blade can be adjusted. With 1000 amperes d-c on each phase, the milli-volts drops "AB" across the moving and stationary blades must be between two and three milli-volts. All the drops on one phase should be checked, after which, adjustment can be made on those contacts that show the greatest variation above these limits. This should provide for a minimum number of adjustments before a nearly equal current distribution is obtained between the various contacts of one phase.

   Any necessary adjustments can then be made by loosening or tightening the nuts "N" depending upon whether the drop across the contacts needs to be increased or decreased. Be sure to open and close the protector a few times to seat the contacts properly after each change in contact adjustment and before taking a milli-volt drop reading. To guard against excessive pressure on the contacts, the milli-volt drop should not be permitted to go below one milli-volt on any one contact with the average on all eighteen contacts of the three phases maintained at approximately 2 milli-volts.

5. When all these adjustments have been made, the contact nuts should be locked in place by means of cotter pins.

6. Although no field adjustment should be necessary at the blade hinged point, the milli-volt drop "XY" should be maintained at approximately one to two milli-volts if there should ever be need for adjustment at this point.

7. As a final check, the protector should be operated electrically a number of times at the minimum closing voltage per Table 3 to make sure that the motor is strong enough to close the contacts fully at all times, and that the contacts do not stick in the closed position due to excessive pressure when the protector is opened by means of the shunt trip. Finally, the protector should be partially closed manually several times to make sure that it does not stick in a closed or partially closed position due to excessive contact pressure at any point of its travel.

8. On each pole, the outer two sets of blades act as the main contacts and the middle set on the serrated portion as the secondary contacts. The arcing con-

tacts are located on the middle set of blades above the secondary contacts. When the protector is closed, when the arcing contacts just touch, there should be a minimum of 3/32 inch gap at the secondary contacts to assure proper operation of the protector when carrying rated current or interrupting fault currents.

9. The contact opening is adjusted by means of the two air dashpots located on the ends of the cross-bar. When the protector is in the open postion, the contact opening at the arcing tips should be between ¾ and $^{7}/_{8}$ inch. The setting is made by loosening the nut on the rod of the dashpot assembly and rotating the piston to the correct position. This adjustment must be made with the circuit breaker open and the mechanism securely fastened to the circuit breaker unit. Care must be used to see that a minimum of 1/64-inch clearance remains between the mechanism roller and the hardened plate on the cross-bar assembly on which the roller bears when closing the protector. After the piston has been placed in the correct position, the nut is jammed up tight against the piston, locking the assembly in place. Two holes are in the piston so that it may be held in place during the locking operation.

4.6.3 Operating Mechanism Adjustments

The shunt trip adjusting screw is shown at the bottom of FIG. 11. Adjustment of the screw fixes the position of the trip lever, which acts as a stop for the latch toggle. Final adjustment of the set screw is made while the shunt trip is in place on the mechanism. Latch toggle loads, which the trip magnet must overcome when tripping the breaker, are reduced by turning the screw clockwise, or increased by the reverse movement.

In general, a light load is desirable, which means that the screw should be so adjusted as to allow the latch toggle to pass only slightly over center. Too light an adjustment is to be avoided, since it may allow the breaker to trip due to mechanical shock or vibration. Installations which are subject to vibration require a latch toggle setting farther over center than that required under steadier conditions.

A good adjustment for average conditions can be made by removing the latch spring and setting the latch toggle so that it will just barely hold the breaker closed during a closing operation. When the spring is restored to its position the additional holding-in force which it provides will be sufficient for the majority of cases.

The resistor associated with the motor closing contactor should be so adjusted that the contactor will be picked up at 80% of normal voltage as described in detailed tests of the operating mechanism. Since the operating motor will close the protector at 70% of rated voltage, a pick-up adjustment of 80% of normal voltage on the relay assures that the motor will always receive enough energy to close the breaker positively.

The operating arm of the operation counter may be adjusted as follows:

The clamping screw in the arm of the counter should be loosened until the arm may be moved on its shaft, but still has sufficient friction to operate the counter. With the clamp screw so set, place the arm in approximately the correct position. Operate the protector several times to see if it counts correctly. If it has counted correctly, the arm is set properly and the clamp screw may be tightened in place. If it has failed to count, shift the arm on the shaft a slight amount in the proper direction and repeat.

4.6.4 Enclosures

Should a quick opening housing require additional tightening of the cover to obtain a water-tight seal, the adjustment may readily be made in the field. If a torque wrench is available, a torque of 300 pound-inches applied to each of the clamping and hinge bolts as described in Para. 4.4.1 should produce a watertight seal. In case a torque wrench is not available, the stop nuts at all the clamping points should be backed off a uniform amount and the cover tightened to the new stop position. This procedure should be done in about 1/16 inch steps.

Note: Non-submersible enclosures require no adjustment.

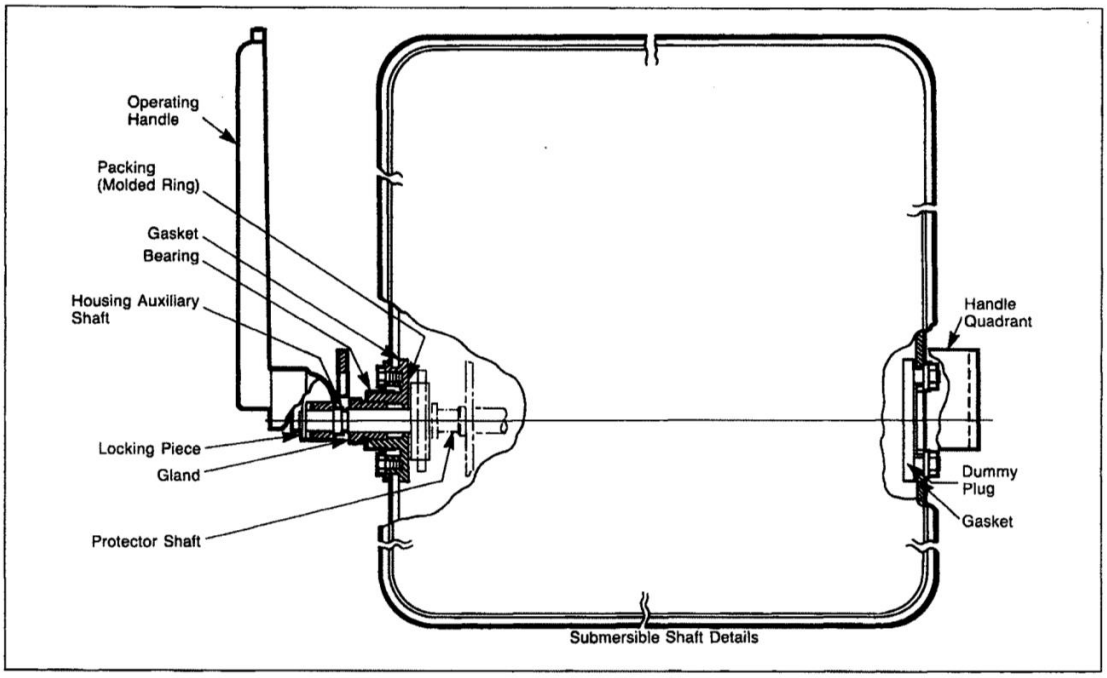

FIG. 18 *Shaft Details for Submersible Housings*

4.7 ELECTRICAL TESTS

WARNING

ANY MECHANICAL OR ELECTRICAL MODIFICATION TO ANY NETWORK PROTECTOR REQUIRES THAT THE NETWORK PROTECTOR BE GIVEN APPROPRIATE ELECTRICAL TESTS, USING PROPERLY MAINTAINED TESTING DEVICES, BEFORE PLACING INTO SERVICE. FAILURE TO PERFORM SUCH ELECTRICAL TESTS CREATES CONDITIONS LEADING TO THE POSSIBILITY OF DEATH, SEVERE PERSONAL INJURY OR PROPERTY DAMAGE.

The purpose of electrical tests in the field is to determine whether the protector and relays are in proper working condition. Such tests will be most effective and reliable and will be facilitated by employing the simplest practicable test methods and connections. It is desirable to check, by means of electrical tests, as many as possible of the electrical and mechanical functions of the protector. Electrical tests should be conducted on all new units after receipt, during periodic inspection and maintenance procedures, and after any mechanical or electrical modification to the network protector.

4.7.1 Electrical Test Procedures

All electrical tests should be performed with a three-phase network protector test kit and multimeter, with the breaker rolled out on its rails, as described in Para. 3.1.

A complete description of the electrical test procedure at system operating voltage is provided in I.B. 35-556A for electro-mechanical relays and I.B. 35-581A for solid-state relays.

When re-energizing the network protector after satisfactory completion of electrical tests, follow procedures described in Para. 4.7.4, Safety Probe Procedure.

4.7.2 Maintenance Electrical Test

Periodically, two tests should be performed on the CM-22 network protectors, particulary if the unit has been re-wired or re-built in any manner. These tests are the dielectric and ductor tests. If these tests are performed at the same time as the operations tests referred to in Para. 4.7.1 it is preferable to do these tests first and then the operation tests.

Dielectric Tests - Rollout Unit

The network relay(s) must not be installed. Remove all other test connections. Disconnect motor, rectifier, lighting transformer, remove light bulb, and lift all ground connections. With grounding wire, tie the relay socket terminals and all wiring terminals together, but avoid touching any grounded area with the shooting wire.

With breaker closed, apply 2200 volts, 60 Hz, for 1 minute between the following parts:

A. Three phases interconnected and ground
B. Two outside phases and ground, center phase grounded
C. Control wiring terminals and ground
D. Trip coil leads and ground.

NOTE: The above value of 2200 Vac is meant to be applied to breakers of new manufacture. All other breakers, regardless of age, apply 75 percent of that value, which is 1650 Vac.

Lighting Transformer - see sheet

Motor - see sheet

Dielectric Test - Enclosure (Transformer bus only)

Disconnect all other test connections. Apply 5000 volts, 60 Hz, for 1 minute between:

A. Three phases interconnected
B. Two outside phases and ground, center phase grounded.

Note: The above value of 5000 Vac is meant to be applied to enclosures of new manufacture. All other enclosures, regardless of age, apply 75 percent of that value, which is 3750 Vac.

Ductor Test - Rollout Unit Only

Measure and record the resistance of each phase of the rollout unit, excluding disconnects. The maximum value per phase is:

800/1875 Amp.	15 Microhms
2500/3000 Amp.	11 Microhms
3500 Amp.	13 Microhms

Note: Ductor readings may be affected by amperage output of ductor as well as atmospheric relative humidity.

4.7.3 Safety During the Installation and Maintenance of 480 Volt Network Protectors

NOTE: Reference to 480 volt is typical only. The same instructions will apply to 400, 433 and 600 volt network protectors.

While proper safety practices on a 216 volt network system are extremely important, at 480 volts extraordinary care must be taken.

There is a basic difference between a 216 volt network and 480 volt network. There is the likelihood that a 480 volt arc will be self-sustaining, while a 216 volt arc will probably burn clear.

The following is a suggested outline procedure for installation and maintenance of all network protectors:

1. On submersible units, vent the unit by loosening the hinge bolts on side of protector opposite operating handle. Move network protector handle to TRIP position and open door of protector housing.
2. Remove disconnect links at bottom of rollout unit, using insulated wrench and insulated gloves.
3. Remove fuses. Use insulated socket wrench and insulated gloves.
4. Loosen bolts that fasten rollout unit to housing.
5. Install rail extensions and move rollout unit from housing.
6. Remove barriers as required, make a thorough inspection and clean all parts.

7. Check for:

   a. Frayed or damaged insulation on control wiring.

   b. Loose bolts or hardware. Pay particular attention to bolts and wiring at rear of main panel.

   c. Broken barriers.

   d. Shifting or movement of parts. Make certain there is proper spacing between phases and from phase to ground.

   e. Carefully check for cracked or damaged cross bar insulation.

   f. Search for indications of overheating and determine cause.

   g. Remove arc chutes and inspect contacts. Smooth contacts, if necessary.

   h. Adjust contacts, if necessary, to assure positive pressure.

   i. Inspect fuses to make certain they are not partially melted, damaged, or loose.

   j. Replace all parts and tighten relay panel. Operate protector manually.

   k. Connect test kit to rollout unit and perform operational tests as outlined in test kit instruction book. See Para. 4.7.1 herein.

8. Before connecting lower links or fuses, test between network connections and rollout unit with a fused test lead, as described in Para. 4.7.4.

9. Close housing door of protector and move handle to AUTO position.

The procedure for installing new protectors should be the same as for maintanance. Although protectors are thoroughly inspected and tested before leaving the factory, it should not be assumed that they will not suffer damage in transit. Also, in installation itself, considerable handling is required to move the protector to the job site and install it on the transformer.

THE NEED FOR STRICT SAFETY PRECAUTIONS IS IMPERATIVE.

I.B. 35-500-

4.7.4 Safety Probe Procedure

This procedure requires the use of a fused "Safety Probe" comprising two insulated leads with an in-line current limiting cartridge fuse holder located in the center and insulated test probes mounted at each end. The cartridge fuse should be rated at 1 ampere at 600 volts and be of the current limiting type suitable for use on systems with 100 kA fault capacity, similar to the BUSSMAN TYPE KTK-1.

After satisfactory test and relay calibration and before replacing any fuses or disconnect links, the following "Safety Probe Procedure" must be followed for all ratings of CM-22 network protectors. This ensures that no fault exists between the breaker main contacts, both transformer and network side, and the control wiring connected to the main contact bus.

Step 1 – Roll unit back into housing to installed position.

Step 2 – With insulated wrench, insert and tighten four captive bolts on main breaker back panel.

Step 3 – Swing relay panel closed and with insulated wrench tighten bolts securely on relay panel.

Step 4 – Replace rollout rails to stored position.

Step 5 – With protector breaker in tripped position, place one insulated test probe at breaker network fuse mounting position for Phase A and the other probe on network terminal bushing fuse mounting position Phase A.

Step 6 – Using light tester, bell tester or ohmmeter, check test fuse continuity across test probes.

Step 7 – If test fuse has not blown, install network fuse Phase A with insulated wrench and insulated gloves.

Step 8 – If test fuse has blown, roll unit back out and check protector and relays for phase-to-ground fault. (Repeat from Step 1.)

Step 9 – Place one insulated test probe on breaker network fuse mounting position Phase B and the other probe on network terminal bushing fuse mounting position Phase B.

Step 10 – Repeat Step 6.

Step 11 – If test fuse has not blown, intall network fuse Phase B with insulated wrench and insulated gloves.

Step 12 – If test fuse has blown, remove Phase A Network fuse and roll unit back out and check protector for phase-to-phase and/or phase-to-ground fault. (Repeat from Step 1.)

Step 13 – Place one insulated test probe on breaker network fuse mounting position Phase C and the other probe on network terminal bushing fuse mounting position Phase C.

Step 14 – Repeat Step 6.

Step 15 – If test fuse has not blown install Network fuse Phase C with insulated wrench and insulated gloves.

Step 16 – If test fuse has blown, remove Network fuses Phase A and Phase B and roll unit back out and check protector for phase-to-phase and phase-to-ground fault. (Repeat from Step 1.)

Step 17 – Use same procedure for testing transformer side of protector at disconnect link mounting positions. Starting with Phase A, etc. Use insulated wrench and insulated gloves.

Step 18 – Close protector door and latch in non-submersible unit, or tighten clamp bolts on operating handle side only, if submersible units.

Step 19 – Place operating handle in AUTO position.

Step 20 – Tighten hinge bolts on submersible units.

Step 21 – Pressure test submersible units.

SECTION 5 - OVERHAUL AND REPAIR

WARNING

REVIEW AND UNDERSTAND SAFETY INFORTION ON PAGES 3 AND 4 BEFORE ANY OVERHAUL OR REPAIR IS PERFORMED. FAILURE TO FOLLOW INSTRUCTIONS CONTAINED HEREIN COULD RESULT IN SEVERE PERSONAL INJURY, DEATH AND/OR PRODUCT OR PROPERTY DAMAGE.

5.1 SAFETY INSTRUCTIONS

1. When working on an energized protector, always use insulated tools and insulated gloves.
2. The protector should be in the OPEN position before the cover is fully opened.
3. Roll the protector out of the enclosure before checking or testing parts.
4. Work only on a de-energized protector, rolled out onto the extension rails.
5. Always move the operating handle to the OPEN position before the disconnecting links or fuses are removed.
6. Check to ensure that the breaker contacts have opened. Refer to Para. 3.4.
7. Any modification to any network protector, whether it be a complete wiring harness replacement or a motor replacement, requires that the network protector be electrically and mechanically retested, including tests referred to in Para. 4.7.1 and 4.7.2.
8. Use only the schematic and wiring diagram applicable to the specific network protector being worked on.

5.2 CHECK LIST OF EQUIPMENT TROUBLES

Note: This list may not be complete. The user should perform any inspection appropriate to the situation

5.2.1 Circuit Breaker

1. Failure of the circuit-breaker to close may be due to:
   a. Mechanism trouble.
   b. Obstruction in the circuit breaker.
   c. Poor connections to terminal blocks or relays.
2. Failure of the circuit breaker to open may be due to:
   a. Mechanism trouble.
   b. Friction in the circuit breaker.
   c. Contact welding.
   d. A broken accelerating spring on the circuit breaker.
   e. Poor connections to terminal blocks or relays.
3. Overheating of the circuit breaker may be due to:
   a. Overload.
   b. Low spring pressure on contacts.
   c. Circuit breaker not completely closed.
   d. Contacts in bad condition
4. Burning of the main contacts may be due to:
   a. Poor contact on the transfer contacts or in the circuit of the transfer contacts.
   b. Too light spring pressure on the transfer contacts.
   c. The main contacts of the circuit breaker closing ahead of the transfer contacts.
   d. Dirt or obstruction between contact surfaces.
   e. Circuit breaker opening too slowly (due to friction or broken accelerating spring).
   f. Light pressure on main contacts.

5.2.2 Mechanism and Relay Panel

1. Failure of the mechanism to close the protector may be due to:
   a. An open-circuit in the motor.
   b. A short-circuit or open-circuit in the control circuit of the motor.
   c. Worn-out motor brushes.
   d. Mechanical obstruction preventing the motor from rotating.
   e. Mechanical obstruction in the toggle mechanism.
   f. An open-circuit to the coil of the motor closing contactor.
2. Failure of mechanism to latch may be due to:
   a. Incorrect adjustment of the latch toggle.
   b. Friction in shunt trip rod or in latch toggle.
3. Failure of the protector to trip may be due to:
   a. An open-circuited shunt trip coil
   b. Friction or mechanical obstruction which prevents the tripping of the toggle.
   c. Improper operation of the auxiliary switch in the shunt trip circuit.
   d. An open control circuit through the master relay.

5.3 TOOLS FOR OVERHAULING AND REPAIR

In addition to the standard set of tools required normally for working on protectors such as wrench sets, pliers, screwdrivers, etc., the following special tools are necessary for safety and convenience.

1. Insulated Wrench, 3/4-in. Hex, short S_t718A212-G02 for small frame, and long S_t5765A20 G02 for large frame.This wrench is used to remove the fuses and disconnect links, open the housing and loosen the relay panel and main panel mounting bolts. Since the network side of the protector may always be energized, the insulated wrench should be used at all times when removing the fuses or links from the protector.

2. Wrench, 9/16-in. for 3/8 inch bolt head, used to remove the motor and shunt trip.

3. A pair of wide nosed pliers will be very helpful if it is necessary to replace the circular Neoprene gasket on the cover of submersible housings.

5.4 DISASSEMBLING INSTRUCTIONS

WARNING

ALL PROCEDURES IN SECTION 5.4 BELOW MUST BE PERFORMED ONLY ON A DE-ENERGIZED NETWORK PROTECTOR.

5.4.1 Removal of Rollout Unit from Enclosure

(Refer also to Section 3.1)

1. Place the operating handle in the OPEN position.

2. Remove the disconnect links and fuses in this order.

3. Loosen the panel mounting bolts located near each corner of the main panel. During this operation it is necessary to open the relay panel by loosening the two bolts which fasten the relay panel to the circuit breaker.

4. Place the extension rails in position.

5. Roll breaker out onto entension rails until front roller meets the rail stop.

5.4.2 Removing the Upper Stationary Contact

1. Remove the protector rollout unit from the enclosure.

2. Remove the main circuit breaker unit barriers.

3. Remove the arc chute and wiring from the stationary contact.

4. The stationary contact can now be removed by removing the two bolts from the rear of the main panel which fasten the stationary contact to the main panel.

5. On 2500 and 3500 ampere protectors the stationary contact is doweled to the main panel to prevent movement between the two members. If the stationary contact can be reused, it should be assembled on the same pole from which it was removed. If a new stationary contact is used, the contact should be doweled to the main panel after blade and fuse alignment has been made by using the dowel holes in the main panel as templates.

5.4.3 Removing a Current Transformer

1. Roll the rollout unit out on the rails.

2. Disconnect the current transformer leads.

3. On protectors rated 1875 amperes and below, remove the link stud located at the lower end of the moving contact assembly.

4. Withdraw the bolt at the lower end of the transformer and slide the transformer off the moving contact assembly.

5. See Para. 5.5.5 for current transformer style numbers.

5.4.4 Removing a Moving Contact Outer Pole 1875 Amperes and Below

1. Remove the protector rollout unit from the enclosure.

2. Remove the wiring from the moving contact. The current transformer may also be removed if so desired but this is not necessary.

3. Remove the main circuit breaker barrier and the arc chute.

4. Remove the screws which fasten the crossbar clamps to the crossbar and withdraw the contact springs for the main and secondary contacts by removing the two nuts used to adjust the contact pressure on the main and scondary contacts.

5. Remove the nut used to adjust the contact pressure on the arcing tip and withdraw the contact spring for the arcing tip.

6. Loosen the two bolts on the rear of the main panel near the bottom. These bolts are tapped into the block on the moving contact assembly. When loose, the moving contact may be drawn downward and completely removed from the circuit breaker.

5.4.5 Removing a Moving Contact Middle Pole 1875 Amperes and Below

Proceed as described under removing an outer pole except that the following additional steps are necessary:

1. The current transformer and the cross-bar must be completely removed by loosening up the cross-bar clamps on each pole and removing the two cross-bars. In order to remove the cross-bar clamp on the centerpole, it is necessary first to remove the insulated bumper on the moving contact assembly. This bumper covers up the head of the bolt used to fasten the cross-bar castings on the centerpole.

2. When the two bolts which fasten the moving contact assembly to the main panel are removed, the moving contact may be withdrawn by sliding it upward until it is free from the circuit breaker.

5.4.6 Removing a Complete Relay Panel and Mechanism

Note: Use only the wiring diagram applicable to the specific protector being worked on.

The swinging assembly consisting of the relay panel and mechanism can be removed as a unit from the circuit breaker. To do this, isolate the protector from the system and leave the operating handle in the OPEN position. Remove the wiring from the 8 point terminal blocks which runs over to the relay panel. Loosen the bolts which fasten the mechanism and the relay panel to the circuit breaker and swing the assembly outward. The assembly can now be lifted off the hinge frame on the circuit breaker unit.

The relay panel is mounted to the operating mechanism by means of four bolts. Two of the mounting bolts are located on the top front of the mechanism casting and two are located at the bottom of the casting below the motor. When separating the relay panel from the mechanism, the two wires running from the motor cut-off switch on the mechanism to the two terminal posts below the phasing resistor must be disconnected, the motor closing contactor must be removed, and the link which actuates the auxiliary switch must be removed.

5.4.7 To Remove Motor Closing Contactor

Note: Use only the wiring diagram applicable to the specific protector being worked on.

1. Disconnect all wiring from the contactor and mark their location for reconnecting.

2. Remove the screw located just above the contactor which fastens the contactor mounting bracket to the mechanism casting.

3. Remove the three screws from the front of the relay panel which fasten the contactor mounting bracket to the relay panel.

5.4.8 To Remove the Auxiliary Switches

Note: Use only the wiring diagram applicable to the specific protector being worked on.

1. With the rollout unit removed from the enclosure, remove the arc chutes and main barriers from the circuit breaker unit, open the relay panel and mechanism, and remove sufficient insulating barriers from the relay panel to provide complete access to the switch.

2. Remove all wiring from the terminals of the switches.

3. Remove the clevis on the lever end of the switch assembly which actuates the switch rotors.

4. Remove the flag link on top of the auxiliary switch assembly which operates the mechanical indicator.

5. Remove the two long ¼ inch pan head screws which secure the auxiliary switch assembly to the relay panel.

5.4.9 Terminator Assembly

To remove the top terminator assembly from the housing, the unit must be isolated from the line and the protector locked open. The fuses and disconnect links must be removed from the protector. The protector must be in the rolled out position. Then remove the upper barrier assembly to gain access to the terminator hold-down bolts. Remove the six ½ inch bolts for each single phase terminator from the top inside of the protector. The terminator bushing is now free from the top of the housing.

To reinstall the terminator bushing it is recommended that a new gasket be used, especially if the existing one is several years old or has become damaged during removal. The gasket material is Nitrile Rubber, Shore Hardness 65, ⅜ x ⅜ inch cross-section. The terminator is then secured to the top of the protector with six 1/2 inch bolts 1.0 inch long threaded into inserts molded into the bottom of the flange. The hardware including standard flat and lockwashers should be grade 5, plated with yellow zinc dichromate. The bolts should be torqued to 30 to 35 ft-lb. **maximum.**

5.5 RETRO-BUILD

We suggest that once every five years, a complete re-check of all network protectors be undertaken, paying particular attention to those units built prior to 1978, to ensure complete integrity of the protector insulation system. The minimum checks suggested are described below.

5.5.1 Dielectric Test on Transformer Bus

1. Test transformer bus at 3750 volts for one minute. Refer to Para. 4.7.2.

   If the bus bar insulators fail — replace with retro-build kit:
   S/N8310A07G01 for 800-1875A
   S/N8310A08G01 for 2500-3000A
   S/N8310A09G01 for 3500A.

These apply only to transformer mounted units.

5.5.2 Dielectric Test on Rollout Unit

Test rollout unit at 1650 volts for one minute. Refer to Para. 4.7.2.

A. If the breaker wiring harness fails, replace with new wiring harness. Contact nearest Cutler-Hammer sales representative for ordering information, and provide nameplate information from the unit.

DANGER

IF THE BREAKER HAS A WIRING HARNESS MANUFACTURED FROM THE BRAIDEDCOTTON, CLASS A, TYPE SIS WIRE OR THE SILICON-RUBBER CONTROL WIRE IT WOULD BE NECESSARY TO DRILL MOUNTING HOLES IN THE ASBESTOS BACK PANEL FOR THE ADDITION OF WIRING CLIPS, TO FIT THE MODERN TEFLON WIRE HARNESS. THIS ACTION SHOULD NEVER BE CONSIDERED AS FREE ASBESTOS WILL BE RELEASED INTO THE ATMOSPHERE. THE ONLY COURSE OF ACTION IS TO REPLACE THE COMPLETE BREAKER ELEMENT.

B. If the breaker is equipped with the older type W auxiliary switch and this happens to fail electrically or mechanically, it can be replaced with the modern RC type of auxiliary switch assembly using S/N 310C626-GO3.

5.5.3 Lead Alloy Fuse Tension

If lead-alloy fuses are utilized they should be checked every inspection period to ensure that proper tension exists at the alloy element when installed. This is accomplished by placing the fuse on a flat surface and attempting to rock the fuse back and forth. A minimum of 1/32 inch clearance should be found under both mounting legs. (See **FIG. 26**). If the proper offset is not detected, replace the fuse with one that will exhibit the correct tension.

5.5.4 Gasket Leaks

Inspect all gaskets for leaks. Refer to Para. 4.3.1. Replace any that leak.

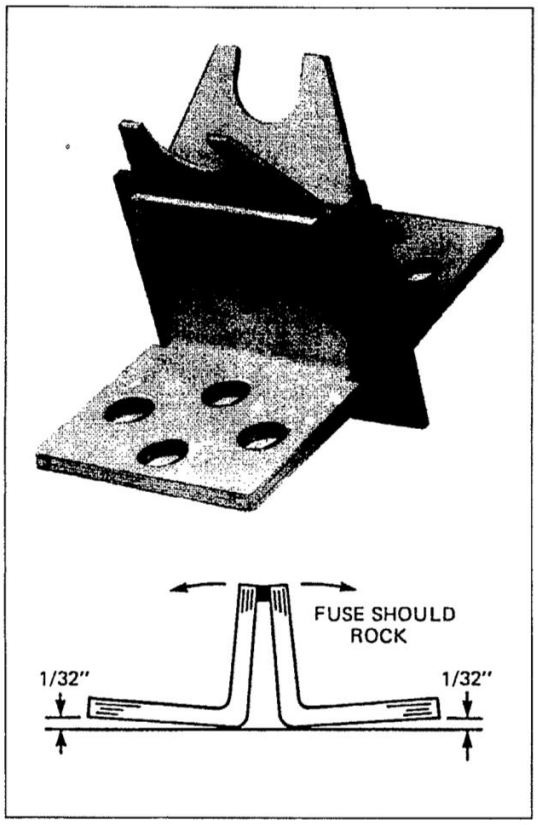

FIG. 26 *Lead-Alloy Fuse Configuration*

5.5.5 Current Transformer Style Numbers and Insulation

For optimum reliability, components with Class H insulation system are recommended. See information below.

A. Current transformers. Present S/N for Class H units are:

Ratio	Style Number
800-5A.	*745C148G01* *Multi-Ratio 1600 / 1200 / 800-5A.*
1200-5A.	*2713C37G01* *Multi-Ratio 1600 / 1200-5A.*
1600-5A.	*592C554G01*
2000-5A.	*6109C13G01*
2500-5A.	*592C556G01*
3000-5A.	*592C557G01*

B. Interphase barriers for breaker and enclosure. Refer to Cutler-Hammer for correct ordering information. The shop order number and/or style number and/or serial number of the network protector in question should be known.

OTHER REFERENCES

DB 35-550	CM-22 Descriptive Bulletin
RPD 35-550	CM-22 Renewal Parts Data
I.B. 35-556-A	Portable Test Kit Instruction Book
Supplement to I.L. 35-555.1	Portable Test Kit Instruction Book
I.B. 35-581A	Network Relays Instruction Book

I.B. 35-500-1E



Copyright Cutler-Hammer Inc., 1998.
All Rights Reserved

Cutler-Hammer
Greenwood, South Carolina U.S.A.

Effective 7/94 (Reprinted 11-98) Supersedes I.B.35-500-ID Dated 5/91
Printed in U.S.A. / CMS 3073

EVERSOURCE	TD864 Revision 2		
TD PROCEDURE	**Spot Network Supply Protection Requirements**		
Issue Date: 03/26/2015	**Effective Date:** **03/26/2015**	**Owner Department**: System Engineering **Subject Matter Expert:** James C. Martin	**Applicability:** CT

All changes to TD procedures are controlled by TD 001
"Writing, Revising, and Publishing Transmission and Distribution Procedures."

This procedure replaces and supersedes the following procedures (in whole or in part), as described in Section 3 "Summary of Changes": Spot Network Supply Protection Requirements, Rev 1, Effective 04/02/09.

Roll Out Instructions:
Prior to initial use of this procedure, each individual using this procedure is required to attend training on this procedure delivered during Bi-Monthly Safety Meeting or similar.

Approvals:

Approval Signature: *Roderick S. Kalbfleisch*

Roderick S. Kalbfleisch
Director-System Engineering

Approval Signature: *Peter A. Barsamian*

Peter A. Barsamian
Director - Strategic & National Accts

Procedure applicable only to states for which an approval signature appears above.

TABLE OF CONTENTS

1. INTRODUCTION 3
1.1 Objective 3
1.2 Applicability 3
1.3 References 3
1.4 Discussion 4
2. INSTRUCTIONS 5
2.1 208Y/120-Volt, Three-Phase, Four-Wire Service Requirements 5
2.2 480Y/277-Volt, Three-Phase, Four-Wire Services Requirements 5
2.3 480Y/277 Volt Ground Fault Protection 5
2.4 Performing Inspection and Maintenance 6
3. SUMMARY OF CHANGES 7

ATTACHMENTS

Attachment 1 Definitions 8
Attachment 2 Ground Fault Protection Philosophy 9
Attachment 3 Ground Fault Testing Methodology 10
Attachment 4 Isolated Ground Ground-Fault Protection Diagram 11
Attachment 5 Zero Sequence Ground Fault Protection Diagram 12

1. INTRODUCTION

1.1 Objective

This procedure provides instruction pertaining to standard ground fault protection requirements for spot networks to prevent customer faults from adversely affecting other customers or Company facilities. These requirements apply throughout the system to all new spot network customers and any existing spot networks if changes are made.

1.2 Applicability

Company personnel make all connections at the protector, provide and install street tie cables, if necessary, and connect to the customer's system.

The customer is responsible to design, install, own, operate, and maintain the secondary system. Provisions shall be made for street ties if deemed necessary by the company.

1.3 References

Unless otherwise specified:

- Forms are available through Lotus Notes NU Forms Catalog or NU Forms Catalog on the NUNet.

Procedures are available in the:

- Lotus Notes Field Documentation Database
- Lotus Notes Regulated Businesses Policies & Procedures database
- Distribution Engineering Standards Bookshelf

Development References
Documents used to develop this procedure and the process it controls:

- TD 001 "Writing, Revising, and Publishing Transmission & Distribution Procedures"
- OEG 252, "Spot Network Supply Protection Requirements"

Supporting References
Documents that support performance of activities directed by this procedure:

- IEEE Std C37.90 - IEEE Standard for Relays and Relay systems Associated with Electric Power Apparatus.
- IEEE Std C37.90.1 - IEEE Standard Surge Withstand Capability (SWC) Tests for Relays and Relay Systems Associated with Electric Power Apparatus.
- IEEE Std C37.90.2 - Standard for Withstand Capability of Relay Systems to Radiated Electromagnetic Interference from Transceivers.
- IEEE Std C37.90.3 - IEEE Standard Electrostatic Discharge Tests for Protective Relays

Supporting Programs and Databases
Programs and databases that support performance of activities directed by this procedure:

- TD 864 Customer Letters on NUNOTES2

1.4 Discussion

A ground fault detection and protection method is typically used to continuously monitor an AC electrical circuit for fault conditions, instantly disconnecting the power in order to minimize loss of life or equipment damage. (See Attachment 3).

For three phase AC powered loads, three separate power lines provide power to the load. The voltage waveforms on these three lines differ only in their timing, or phase relationship. A fourth wire may provide a neutral connection to the load. In the case of balanced loads, where the current in each of the three phases is equal, the current in the neutral wire will be zero. The vector sum of the currents drawn from the three phase lines will be zero with a balanced load. A non-zero sum of the current indicates an unbalanced load and that a current is returning to the generator, or current source, via an unintended path. This is the ground fault current.

Fault-protection relays include fast contact opening to reduce the fault duration and accurate sensing in a fault current environment. The ability to function is required under adverse environmental conditions and in an electromagnetic environment that may include power line interference, High Intensity Radiated Fields and induced surges due to lightning strike.

The required number and size of spot network transformers installed may result in the interrupting capacity of the protectors being exceeded. Such cases should be referred via the Circuit Zone Manager to the System Distribution Engineering Protection Section for a recommendation. Current-limiting fuses may be required.

2. INSTRUCTIONS

NOTE

In the following sub-sections, Company refers to CL&P.

2.1 208Y/120-Volt, Three-Phase, Four-Wire Service Requirements

Customer

2.1.1 If the Secondary System is cable, SUPPLY and INSTALL current limiting devices at the service end of all phase cables.

2.1.2 If the Secondary System is Bus Duct, and the cable length between the bus duct and the protector is equal to or greater than 10 feet, SUPPLY and INSTALL current limiting devices at the service end of all phase cables.

2.2 480Y/277-Volt, Three-Phase, Four-Wire Services Requirements

Customer

2.2.1 If the Secondary Systems is cable, SUPPLY and INSTALL current limiting devices at the service end of all phase cables.

2.2.2 If the Secondary Systems is Bus Duct, and the cable length between the bus duct and the protector is equal to or greater than 10 feet, SUPPLY and INSTALL current limiting devices at the service end of all phase cables.

2.3 480Y/277 Volt Ground Fault Protection

NOTE

1. This section applies to 480Y/277 volt equipment only and does not pertain to 208Y/120-volt equipment.
2. The intent of installing ground fault equipment is to protect Company equipment from damage due to a ground fault on the customer's system in the area between the customer's main overcurrent protective devices and the Company's network protectors.

Customer

2.3.1 DESIGN a ground fault protection scheme with the following considerations:

- The Company permits tripping of its network protectors by the Customer's approved ground fault protection equipment as long as there is an "a" and "b" contact (isolated) associated manual/electronic resettable lockout relay under company control for each protector.
- The control wires are run in conduit by the customer to the protector(s).
- The actual connection of the control wires to the network protector is made by Company personnel at the Company's expense.
- The ground fault protection installation must be proof tested by the Customer and witnessed by Company personnel at the customers expense

2.3.2 Prior to the installation, REQUEST approval of the ground fault protection scheme from the Company's System Distribution Engineering Protection Group.

Company

2.3.3 ENSURE compatibility of the Customer's proposed ground fault protective scheme with the Company's system and equipment.

2.3.4 Refer to TD 867, "Distribution System Protection," and ENSURE the Customer's proposed collector bus ground fault scheme conforms with the Eversource requirements.

Customer

2.3.5 Following Company approval, INSTALL ground fault protection equipment.

2.3.6 REQUEST Eversource to make the final network protector wiring connections.

2.3.7 Prior to one week of energizing, TEST the ground fault equipment and ENSURE the test is witnessed by Utility Company personnel.

2.4 Performing Inspection and Maintenance

NOTE

The testing and inspection required in this section may be performed by a private testing contractor.

Account Executive

2.4.1 CONTACT the customer with instructions to provide their ground fault protective scheme inspection and testing results.

a. In the instructions for the customer, INCLUDE a reminder to the customer about notifying the Account Executive if the ground fault system will be inoperable for longer than 24 hours.

Customer

2.4.2 If at any time the ground fault system will be inoperable for longer than 24 hours, NOTIFY Account Executive.

2.4.3 To ensure the ground-fault protection is capable of operating correctly, INSPECT and TEST the system once every two years.

2.4.4 SEND copies of the authorizing personnel's signed inspection and testing results to the designated Account Executive.

Account Executive

2.4.5 RECEIVE copies of inspection and testing results, RETAIN a copy in TD 864 Customer Letters on NUNOTES2 database and FORWARD a copy to System Distribution Engineering Protection Group for review.

3. SUMMARY OF CHANGES

Changes to TD Procedures are controlled by TD 001 "Writing, Revising, and Publishing Transmission & Distribution Procedures."

Revision 0 – Effective Date

New procedure developed from material formerly contained in OEG 252, "Spot Network Supply Protection Requirements."

Revision 1 – 04/02/09

Globally – updated cover page, format, corrected typos, and made consistent.

Added John Ferrantino to the signature page

Added Paragraph 2.4.1

Changes to TD document include text changes within Sections 2.3.1, 2.4.3, 2.4.4 and 2.4.5.

Text changes to "Ground Fault Protection Philosophy"

Revision 2– 03/26/15

- Updated Approvers
- Updated SME from Dave Vassallo to James Martin.
- *Section 1.3, References* updated to align with current template.
- *Section 1.3, Supporting Programs and Databases* updated.
- Changed *NU Account Executive* to *Account Executive* throughout document.
- Changes include text changes within Sections 2.3.2, 2.4.1, 2.4.2, 2.4.4, 2.4.5 & Attachment 2i.
- Changed section 2.3.7 to ensure customer testing BEFORE energizing
- Added to Eversource template.
- Changed NU and CL&P to Eversource where applicable.

Attachment 1
Definitions

(Sheet 1 of 1)

Spot Network – A spot network is a network service served by two or more network transformers that are not connected to the network secondary grid. The spot network typically serves a single building. The secondary voltage is commonly 480Y/277, but may also be 208Y/120.

Attachment 2
Ground Fault Protection Philosophy
(Sheet 1 of 1)

Ground fault protection for a collector bus on a 480Y/277 Volt spot network service has been a Legacy Northeast Utilities (NU) requirement for some time. The purpose of the ground fault protection is to deenergize the service when a fault occurs on the customer's collector bus. This requirement was developed because of the destructive nature of bus duct faults at the 480 volt level. These faults can result in major damage to a Customer's collector bus and to Eversource's network equipment. Once a fault occurs, one cannot enter a vault to open the protectors. Without ground fault protection to interrupt the fault, the primary supply circuits at the source would have to be tripped. This would jeopardize the remaining network circuits and may cause primary cable failures due to overloads beyond normal design contingencies which could continue to cascade.

Suitable ground fault equipment is available from many manufacturers which all have two common elements. The first element is a means to detect a collector bus fault, (note that standard protector relays do not respond to secondary faults.) The second element is the means to trip and lock open the protector.

Ground fault equipment is designed, purchased, coordinated, maintained, installed, and tested by the Customer and requires Eversource approval. Additionally, the final network protector wiring connections shall be made by Eversource.

When considering ground fault protection equipment, proper operation of system controls during brownout conditions must be considered. Two of the most commonly used and Eversource approved types of Collector Bus ground fault protection designs are the Isolated Ground and Zero Sequence ground fault detection schemes. Sample diagrams indicating general interface equipment and inter-wiring connection for both of these ground fault systems are provided in Attachment 4 and Attachment 5.

The most critical element in this system is the electrical power source for operating the lockout relay. The voltage source to operate the lockout relay may be at the location of the fault and the corresponding voltage reduction may prevent the typical AC lockout relay from operating. Special relays are available that operate on reduced voltages. An alternative to using the special relays would be a battery or UPS backup system to provide the lockout relay power. The power source used to power the ground fault shunt trip relay and to provide the means to lock open the protector shall be monitored by the customer for system integrity. Upon failure of the power source, it is the Customer responsibility to make repairs as quickly as possible and notify Eversource that the system will be inoperable for longer than 24 hours.

All proposed collector bus ground fault schemes shall be reviewed and evaluated by the appropriate Eversource personnel to ensure it conforms with the requirements of **TD 867**, "Distribution System Protection," (formally **TD 821**), not only for acceptable collector bus protection, but to prevent damage to other related equipment. GFI relay coordination settings by customer engineering consultant shall be made available to Eversource at time of protection scheme witness testing and approval.

Attachment 3
Ground Fault Testing Methodology

(Sheet 1 of 1)

There are three basic means of sensing ground faults. The most simple and direct method is the ground return (or isolated ground) method. This sensing method is based on the fact that all currents supplied by a transformer must return to that transformer. When an energized conductor faults to grounded metal, the fault current returns along the ground return path to the neutral of the source transformer. This path includes the grounding electrode conductor. A current sensor installed on this conductor will respond to ground fault currents. Normal neutral currents resulting from unbalanced loads will return along the neutral conductor and will not be detected by the ground return sensor. The current generated in the sensor is then used to actuate a ground fault relay, in turn opening the main power circuit by shunt tripping a circuit breaker, or other supply conductor isolating device.

A second method of detecting ground faults involves the use of a zero sequence sensing method. This sensing method requires a single, specially designed sensor either of a torriodial or rectangular shaped configuration. This core balance current transformer surrounds all the phase and neutral conductors in a typical 3 phase, 4-wire distribution system. The sensing method is based on the fact that the vectorial sum of the phase and neutral currents in any distribution circuit will equal zero unless a ground fault condition exists downstream from the sensor.

All currents that flow only in the circuit conducts, including balanced or unbalanced phase-to phase and phase-to neutral normal or fault currents, and harmonic currents, will result in zero sensor output. However, should any conductor become grounded, the fault current will return along the ground path - not the normal circuit conductors - and the sensor will have an unbalanced magnetic flux condition leading to an induced current flow in the sensor windings. The generated output current is then used to actuate the ground fault relay, in turn opening the main power circuit by shunt tripping a circuit breaker, fused switch, or other similar device.

A third method of detecting ground faults involves the use of multiple current sensors connected in a residual sensing method. This is a very common sensing method used with circuit breakers equipped with electronic trip units and integral ground fault protection. The three-phase sensors are required for normal phase overcurrent protection. Ground fault sensing capabilities are obtained by the addition of an identically rated sensor mounted on the neutral. The vectorial sum of the total currents in all the conductors will total zero under normal, non-ground faulted conditions.

As with the zero sequence sensing method, the resultant residual sensor output to the ground fault relay or integral ground fault tripping circuit will be zero if all currents flow only in the circuit conductors. Should a ground fault occur, the current from the faulted conductor will return along the ground path, rather than on the other circuit conductors, and the residual sum of the sensor outputs will not be zero. When the level of ground fault current exceeds the pre-set current and time delay settings, a ground fault tripping action will be initiated.

"Applied Engineering Concepts" website – www.aec-us.com

Attachment 4
Isolated Ground Ground-Fault Protection Diagram

(Sheet 1 of 1)

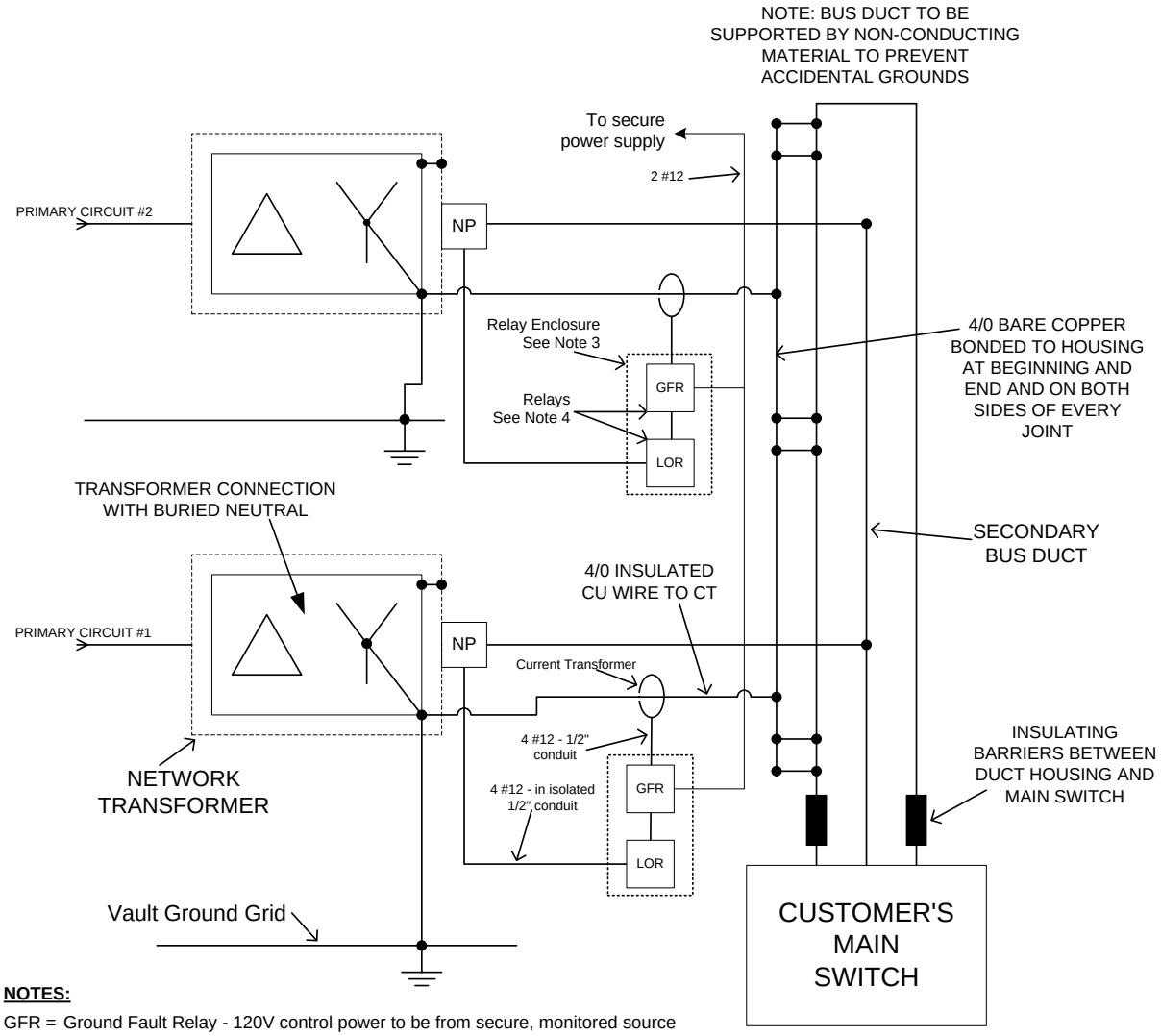

NOTES:

GFR = Ground Fault Relay - 120V control power to be from secure, monitored source

LOR = Hand-reset LockOut Relay (86) with "A" & "B" contact

NP = Network Protector - Final control wiring connection to be made by Eversource Ct Electric. "A" contact to parallel master relay trip contact. "B" contact to be in series with master relay close contact.

1. Provide engraved nameplate on each relay enclosure stating "Busway" ground fault protection system. Lock open protectors before resetting system.
2. Customer testing to verify that required current in CT will cause GFR to trip LOR. Eversource Ct Electric testing will verify that tripping LOR will cause NP to open..
3. Relay enclosure: must meet NEMA 6 specifications for watertight enclosure. Must be large enough to accommodate relays for all planned network units, including allowing for expansion.
4. Relay Specs:
   - IEEE Std C37.90 - IEEE Standard for Relays and Relay systems Associated with Electric Power Apparatus.
   - IEEE Std C37.90.1 - IEEE Standard Surge Withstand Capability (SWC) Tests for Relays and Relay Systems Associated with Electric Power Apparatus.
   - IEEE Std C37.90.2 - Standard for Withstand Capability of Relay Systems to Radiated Electromagnetic Interference from Transceivers
   - IEEE Std C37.90.3 - IEEE Standard Electrostatic Discharge Tests for Protective Relays.

Attachment 5
Zero Sequence Ground Fault Protection Diagram

(Sheet 1 of 1)

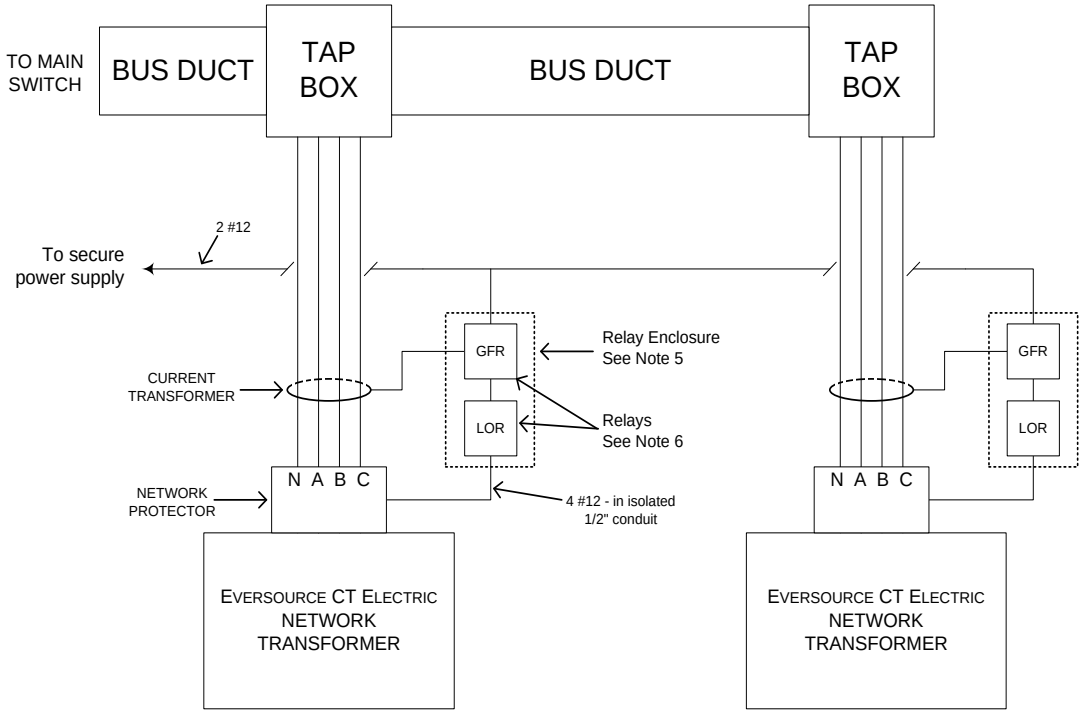

NOTES:

GFR = Ground Fault Relay - 120V control power to be from secure, monitored source

LOR = Hand-reset LockOut Relay (86) with "A" & "B" contact

NP = Network Protector - Final control wiring connection to be made by Eversource CT Electric. "A" contact to parallel master relay trip contact. "B" contact to be in series with master relay close contact.

1. Provide engraved nameplate on each relay enclosure stating "Busway" ground fault protection system. Lock open protectors before resetting system.
2. Customer testing to verify that required current in CT will cause GFR to trip LOR. CL&P testing will verify that tripping LOR will cause NP to open..
3. Do not run ground fault system conductors alongside power conductors.
4. Provide 90 ohm resistor for monitor panel test circuit to simulate ground fault current.
5. Relay enclosure: must meet NEMA 6 specifications for watertight enclosure. Must be large enough to accommodate relays for all planned network units, including allowing for expansion.
6. Relay Specs:
   - IEEE Std C37.90 - IEEE Standard for Relays and Relay systems Associated with Electric Power Apparatus.
   - IEEE Std C37.90.1 - IEEE Standard Surge Withstand Capability (SWC) Tests for Relays and Relay Systems Associated with Electric Power Apparatus.
   - IEEE Std C37.90.2 - Standard for Withstand Capability of Relay Systems to Radiated Electromagnetic Interference from Transceivers
   - IEEE Std C37.90.3 - IEEE Standard Electrostatic Discharge Tests for Protective Relays.

EVERSOURCE	WORK METHOD STANDARD ELECTRIC OPERATIONS ORGANIZATION

Westinghouse CM-22 Network Protectors Aluminum Bus

Document Number:	Issued Date:	Revised Date:	Revision:	Applicability:
WMS 56.03-23	10-Sep-20	---	0	CT/WMA

*****This Document Supersedes Technical Information Bulletin: PIB-07-001 and Policy and Procedure, Field Documentation: M4-WP-3061 *****

Scope:

This procedure details how to identify an aluminum transformer bus in Westinghouse CM-22 network protectors and provides guidance for venting suspect network protectors prior to operating the network protector's operating handle. Identification and tagging procedure for suspect network protectors is included in this work method.

Safety:

Providing a work environment, free of recognized hazards is a value at Eversource. Therefore, prior to the start of any work, ensure that you are familiar and knowledgeable with all Eversource Safety Rules, Policies and Procedures that are applicable to the work and tasks at hand and perform a job brief at the job site, prior to commencing work. PPE requirements to protect the worker shall be followed as required in the Eversource Employee Safety Manual.

Reviewed by: Approval on file — Date: August 3, 2020
Jonathan Duffy
Director, Safety

Approved by: Approval on file — Date: July 28, 2020
Jennifer Hebsch
Director, Distribution Technical

Approved by: Approval on file — Date: September 10, 2020
Bruce Bernier
Director, Electric Field Operations, CT

Approved by: Approval on file — Date: July 30, 2020
Anthony Anzalone
Director, Substation Operations, MA

Approved by: Approval on file — Date: July 29, 2020
Paul Melzen
Director, Substation Engineering, MA

Rev No.	Description	Date
0	Original Document	September 10, 2020

Table of Contents

Section		Page
1.0	Introduction	3
2.0	Reference Documents	3
3.0	General	3
4.0	Methods of identification	3
5.0	Ventilation Procedures	8
6.0	Identification and Tagging	8

1.0 Introduction

When an aluminum bus is exposed to moisture, a potentially volatile atmosphere of aluminum oxide and hydrogen gas may be formed within the network protector where an electrical ignition source exists or when energized. It has been identified that Westinghouse CM-22 network protectors, less than 2000 A and submersible enclosures manufactured in the 1950's and early 1960's, may contain an aluminum transformer bus that connects the protector to the transformer terminals. This bus runs in the back of the protector case. Instructions and procedures, outlined in this document, help positively identify if a network protector has an aluminum or copper transformer bus. All Westinghouse CM-22 submersible network protectors containing an aluminum bus shall not only be vented prior to operating protector handle, but also be identified properly in accordance with this work method.

2.0 Reference Documents

PIB-07-001	Technical Information Bulletin
M4-WP-3061	Policy and Procedure, Field Documentation
TD 211	When to Wear Arc Rated Flame Resistant Clothing
TD 877	Managing Arc Flash Hazards on Connecticut Distribution Facilities
TD 879	Managing Arc Flash Hazards on WMECO Distribution Facilities
TD 952	Protection of Personnel Entering Enclosed Spaces

Network Protector CM-22 – Major Maintenance Instructions, document number 6.29D

Safety Alert 08-2006

Attachment 1

3.0 General

3.1 Eversource safety procedures and practices shall be followed before proceeding with any of the procedures mentioned in this work method. Refer to **Section 2** for supplemental practices and procedures.

3.2 Inspect all suspect Westinghouse CM-22 submersible network protectors to determine if an aluminum or copper bus is present prior to operating the protector handle.

3.2.1 Shop Order (S.O) number labeled on the nameplate shall be checked to determine if the network protector was manufactured with an aluminum or copper bus.

3.2.2 If the nameplate cannot be located or is not legible, measure the thickness of the bus with approved insulated gauge for an alternate method of identification.

3.2.3 All suspect network protectors shall be vented prior to operation and be properly labeled for identification.

4.0 Methods of identification

4.1 There are two method to identify if the suspect Westinghouse CM-22 network protector has an aluminum or copper transformer bus.

4.1.1 The first method is to locate the Shop Order (S.O.) number found on the nameplate of the network protector.

4.1.2 The second method is to use the insulated Go / No- Go Gauge to measure the physical difference (thickness) between the aluminum and copper bus.

4.2 The S.O. number located on the nameplate of the network protectors in question contains a series combination of letters and numbers.

4.2.1 S.O. numbers starting with **30Y, 31Y, 32Y, 33Y, 35Y, 43Y, 44Y and followed by a four-digit number** indicate that the network protector may contain an aluminum bus.

4.2.2 S.O numbers starting with the same two-digit number with a subsequent letter Y, as mentioned above, but followed by a **three-digit number** indicate that the network protector may contain a copper bus.

4.2.3 Figure 1 shows an example of a nameplate of a Westinghouse CM-22 network protector that highlights one possible S.O. letter/number sequence of a network protector with aluminum bus.

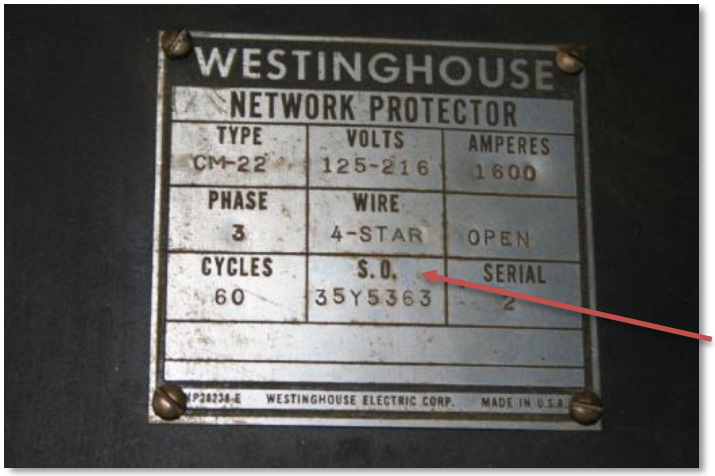

S.O number followed by four (4) digits: **35Y5363**

Figure 1 – Shop Order Number (Aluminum bus)

NOTE:

- Submersible network protectors with an aluminum bus shall be vented prior to operating the network protector handle. Refer to **Section 5**.
- If the nameplate on the network protector is missing or is not legible, the network protector shall be treated as if it contains an aluminum bus unless it has been positively identified as not containing an aluminum bus.

4.3 Positive identification of an aluminum bus may be difficult since both aluminum and copper buses are silver plated. The physical difference between aluminum and copper buses is the thickness of the bus. The aluminum bus is **1-inch** thick as shown in Figure 2 while the copper bus is **¾-inch** thick as shown in Figure 3.

NOTE: This bus will be energized if the transformer is energized.

Aluminum bus



Figure 2 – 1 inch bus (Aluminum)

Copper bus



Figure 3 – ¾ inch bus (Copper)

4.4 T&D Standards has developed an "Insulated Go / No- Go Gauge" to facilitate measuring the thickness of the bus and to replace the use of a measuring device as shown in Figures 2 and 3.

4.4.1 If the clearance between the bottom barrier board and the bus is adequate, attempt to slip the "slotted" end of the gauge onto the bus.

4.4.2 A copper bus fits into the slot of the gauge as shown in Figure 4, while an aluminum bus is too large to fit into the slot of the gauge as shown in Figure 5.

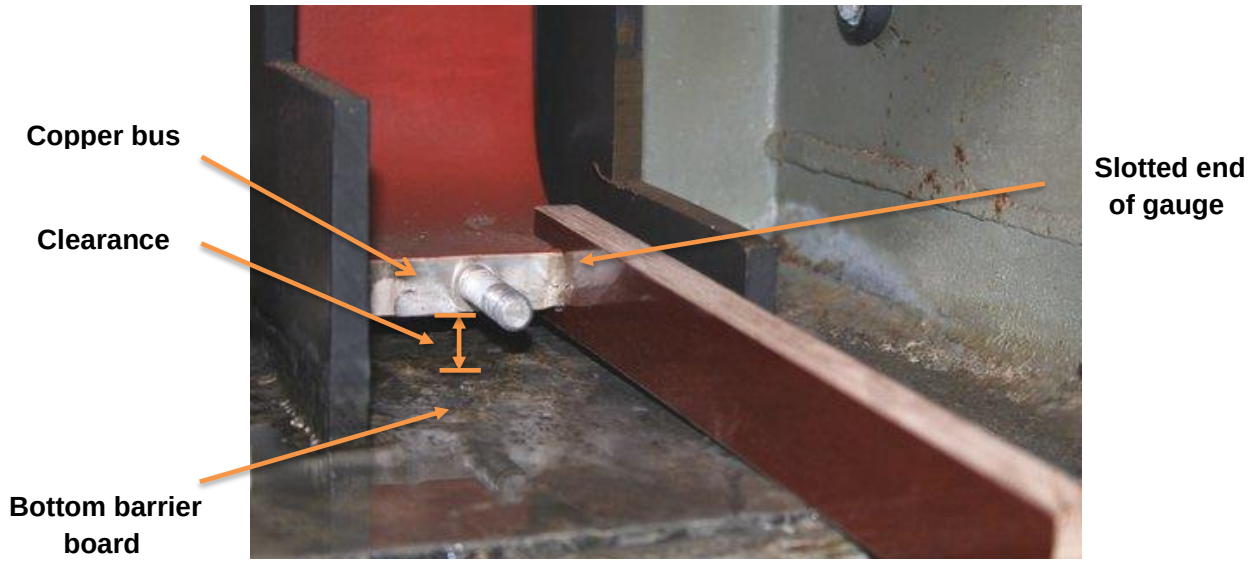

Figure 4 – Go / No- Go Gauge (Copper bus)

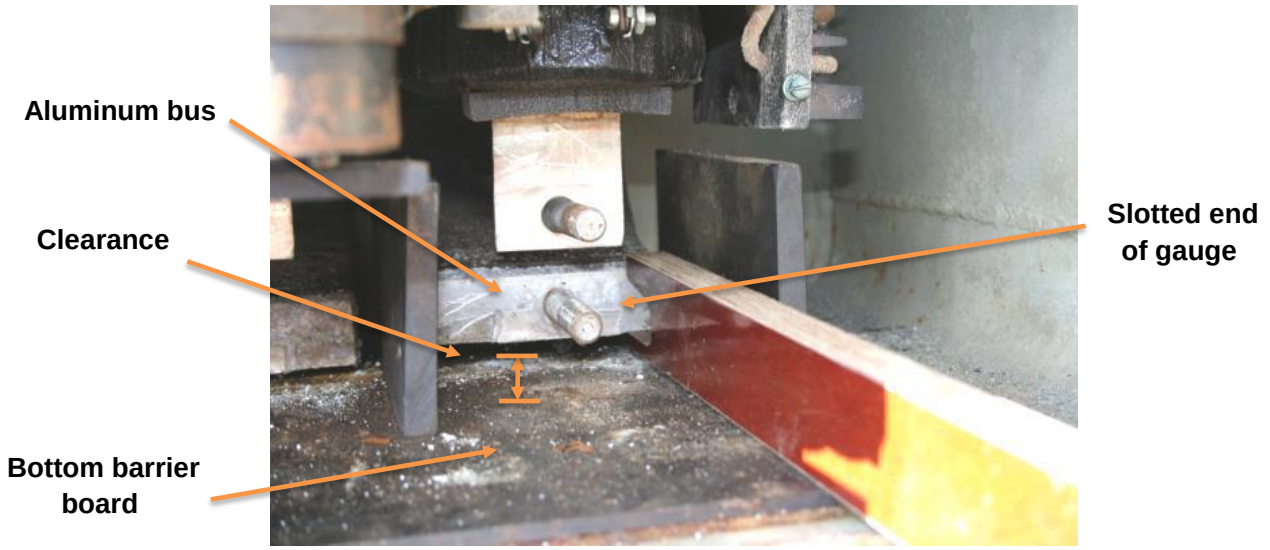

Figure 5 – Go / No- Go Gauge (Aluminum bus)

4.5 If the clearance between the bottom barrier board and the bus is tight, use the opposite end of the insulated gauge and align it with the bottom edge of the bus. As shown in Figure 6, the insulated gauge is slightly larger than the bus indicating that the bus is copper. In contrast, as shown in Figure 7, the insulated gauge is slightly smaller than the bus indicating that the bus is aluminum.



Figure 6 – Go / No- Go Gauge (Copper bus)



Figure 7 – Go / No- Go Gauge (Aluminum bus)

NOTE:

The insulated Go / No- Go Gauge will be manufactured as needed. In addition, the insulated gauge shall be maintained clean and dry. Refer to **Attachment 1** for specification of the insulated Go / No- Go Gauge.

5.0 Ventilation Procedures

5.1 Nameplates of submersible network protectors that show a S.O. number with four digits after the letter Y shall be vented prior to operating the network protector handle, unless they have been properly identified as not containing an aluminum bus. This requirement also includes network protectors that are found in the OPEN position.

5.2 The door of the network protector enclosure is opened, but remains engaged, by loosening the cover bolts located on the opposite side from the operating handle to allow a gap of approximately 1/8" to 1/4". The cover bolts are backed-off from the fully sealed position to allow for this gap.

5.3 The enclosure is vented for a minimum of two minutes.

5.4 After ventilation, the door shall be resealed by fully tightening all enclosure cover bolts. A torque of 300 pound-inches should produce a watertight seal.

5.5 The operating handle of the network protector shall be operated while standing to the side or away from the front of the protector enclosure, as much as possible.

6.0 Identification and Tagging

6.1 Any protector identified with an aluminum bus, or a potential aluminum bus (per **Section 4**) shall have a brass tag attached to the lifting eye.

6.2 A permanent brass tag with aluminum bus designation shall be attached once the unit is opened and the aluminum bus is positively identified.

Attachment 1

Go / No- Go Gauge

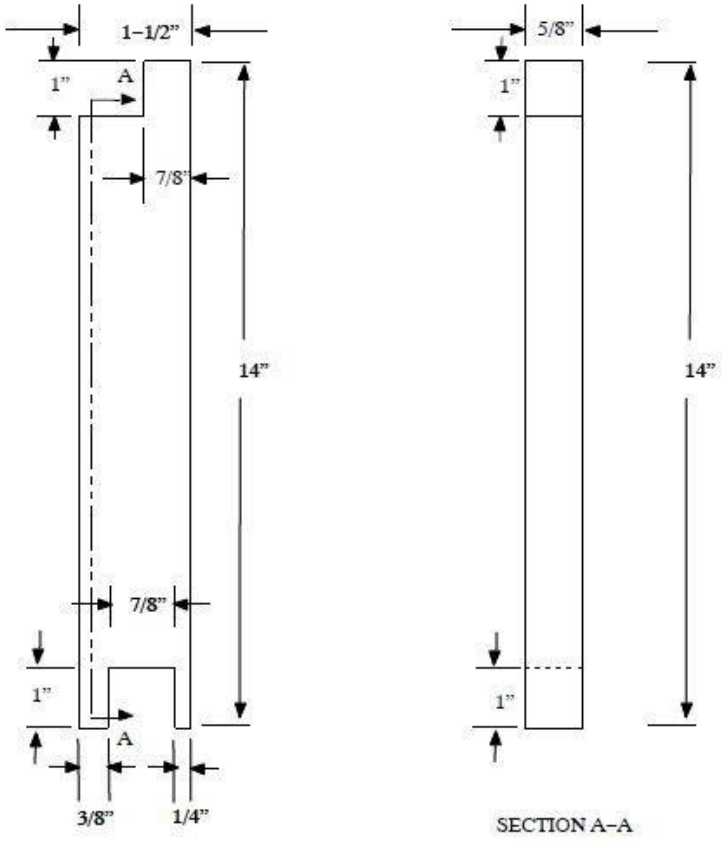

Note 1: Manufacture from Insulating Phenlic Laminate (CE or LE type)
Note 2: Drawing Not to Scale

Drawing Title: CM–22 Aluminum Bus Go / No Go Gauge	
Drawn By: C. Cory Morgan	Date: 12/18/06
DWG No: CCM–112106–1	Revision No: 1

APPENDIX 14

APPENDIX NO LONGER USED

APPENDIX 15

APPENDIX NO LONGER USED

APPENDIX 16

STREET LIGHTING

Scope:

This document outlines the Maintenance Schedule for Streetlights.

Safety:

Providing a work environment, free of recognized hazards is a value at Eversource. Therefore, prior to the start of any work, ensure that you are familiar and knowledgeable with all Eversource Safety Rules, Policies and Procedures that are applicable to the work and tasks at hand and perform a job brief at the job site, prior to commencing work. PPE requirements to protect the worker shall be followed as required in the Eversource Employee Safety Manual.

Connecticut

Approved by: *Signature on File* Date: 05-Jul-23
Barry Lashley
Director, Electric Operation

Approved by: *Signature on File* Date: 03-Jul-23
Christopher Menard
Director, Electric Operations

Approved by: *Signature on File* Date: 30-Jun-23
Jeffrey Richard
Director, Distribution Engineering

Massachusetts

Approved by: *Signature on File* Date: 03-Jul-23
Robert O'Loughlin
Director, Electric Operations

Approved by: *Signature on File* Date: 30-Mar-23
Mark Baldwin
Director, Electric Field Operations, Boston

Approved by: *Signature on File* Date: 29-Jun-23
Daryle Brown
Director, Electric Field Operations, Central

Approved by: *Signature on File* Date: 06-Jul-23
Kevin Saulnier
Director, Electric Field Operations, South

Approved by: *Signature on File* Date: 30-Jun-23
David Velez
Director, Electric Field Operations, West

New Hampshire

Approved by: *Signature on File* Date: 24-Feb-23
Jason Yergeau
Director, Electric Operations

Tri-State

Approved by: *Signature on File* Date: 15-Mar-23
Jennifer Hebsch
Director, T&D Standards Engineering

Approved by: *Signature on File* Date: 21-Jul-23
Fatou Dieng
Director, Asset Management

Rev No.	Description	Date
2	1. Reformatted to latest Eversource template. 2. Changed Approver names on the Signature page, as required. 3. Group relamping is no longer a practice at Eversource and has been removed 4. LED Maintenance interval and schedule has been included. Maintenance basis documentation and procedures have been included. 5. Inclusion of LEDs and corresponding terminology. 6. Added in Metal Streetlight Poles to document. EMP 5.51 has been retired.	July 21, 2023
1	1. Clarified 5Y and 6Y group relamping intervals. 2. Removed detail steps and referenced TD 863 for detail steps on troubleshooting and waste processing. 3. Added references to PSNH procedures CO-1081 and CO-1109 under Failure Finding and Reference Documents. 4.Added relamping requirements for municipalities under 1000 fixtures. 5. Change to Failure Finding Section.	July 15, 2011
0	Original Document.	---

1.0 Introduction 5
2.0 Reference Documents.....5
3.0 Definitions 5
4.0 Inspection and Maintenance Schedules.....5
5.0 Maintenance Categories 6
6.0 Failure Findings.....6
7.0 Streetlight Maintenance Basis Documentation.....6

Appendix A 8

1.0 Introduction

1.1 Streetlight maintenance includes the Time-Directed (preventive) and Condition-Based maintenance which includes the troubleshooting and repair of lights that have failed. This document provides the intervals for time-directed maintenance for all municipalities.

1.2 For Non-LED Streetlights:

1.2.1 The term “Lamp” refers to the bulb that actually illuminates.

1.2.2 The term “Fixture” refers to streetlights. It includes the assembly into which the lamp and photocontrols are installed.

1.3 For LED Streetlights:

1.3.1 LED streetlights do not require the use of a “Lamp” as the LEDs are integrated into the “Fixture”.

1.3.2 Photocontrols shall be installed for LED streetlights.

1.4 It is important to label the inside of the fixture with date of installation for record keeping and for an indication of maintenance check.

1.5 **Appendix A** contains the operating hours for LED streetlights and the operating hours of Optional Midnight Service respectively for all three states according to their respective currently approved rates.

2.0 Reference Documents

TD 863	Pole-top Repair of High-Pressure Sodium Luminaires and Flood Lights
TD 223	Regulated Waste Storage
DTR 21.061	Overhead Fed Luminaire Connections Wood Pole − Bracket Mounting
DTR 21.433	Metal Poles - Premium Decorative Lighting Pole W/Receptacle Metal Pole & Luminaire Wiring
ANSI/IES RP-8-21	Recommended Practice: Lighting Roadway and Parking Facilities

3.0 Definitions

3.1 The abbreviations used for the intervals are:

3.1.1 **Y** = Year, i.e. 2Y = 2 Years

3.1.2 **A/R** = As Required

4.0 Inspection and Maintenance Schedules

4.1 Any failed lamps or NON-LED fixtures shall be disposed of in accordance with **TD 223** and replaced with an equivalent LED fixture.

4.1.1 Existing inventory of NON-LED lamps and fixtures shall be depleted and used prior to installation of LED fixtures.

4.1.2 Prior to installation of any LED fixtures, each operating state shall refer to their corresponding currently approved rate to identify which LEDs are currently approved in their rates.

Table 1 – Streetlight Maintenance Intervals

LED Street Light Maintenance Schedule	Interval
Time-Directed	
Replace Fixture	15Y
Inspect Metal Streetlight Pole	15Y
Condition-Based	
Perform Troubleshooting Based on Malfunction	A/R
Replace Fixture	A/R

5.0 Maintenance Categories

5.1 Time-Directed

5.1.1 Fixtures are to be replaced on a 15 YR scheduled basis before they fail in order to provide continuous service and eliminate the cost of emergency repairs.

5.1.2 Western Massachusetts does not perform Time-Directed Maintenance; instead, they perform Condition-Based Maintenance.

5.2 Condition-Based

5.2.1 See **TD 863** for details on troubleshooting streetlight problems and the handling of waste materials.

6.0 Failure Findings

6.1 Report each fixture that has been disconnected at the end of the workday to your supervisor.

6.2 Non-LED streetlights must have the lamp removed. The lamp is to be placed in the appropriate environmental disposal container. The fixture, with no lamp, is to be disposed of in the scrap metal dumpster (or streetlight dumpster if one is available at the facility or job site).

6.3 LED fixtures are to be disposed of in the scrap metal dumpster.

6.4 Any failures found during maintenance should be recorded and provided to Supervisor and to Street Light Account Executive or Customer Service for follow-up.

6.5 The responsibility for cost of repair of lighting fixtures varies with each operating company. Documentation specific to each company should be referenced where appropriate.

7.0 Streetlight Maintenance Basis Documentation

7.1 According to RP-8-21, the industry standard for LED end of life is the point at which light output has reached a percentage of its initial output, usually 70%. This is reported as the L70 value.

7.1.1 L70 is the time (in hours) when the light output from the LED has dropped to 70 percent of its initial output.

7.1.2 The rated lumen-maintenance life of an LED is the elapsed operating time over which an LED light source maintains a given percentage of its initial light output.

7.1.3 LEDs do not typically fail outright but instead continually fade.

NOTE: The time when the rated lumen maintenance life of an LED light source is reached is dependent on many variables, including the operating temperature, the drive current, and the technology and materials used to construct the products. As such, the lumen maintenance of LEDs can vary not only from manufacturer to manufacturer, but also between different LED package types produced by a single manufacturer.

7.2 According to both currently approved manufacturers Cooper Lighting and American Electric Lighting, the operating hours of the driver in LED streetlights are 100,000 hours and LEDs' L70 value is greater than 100,000 hours at 25 degrees Celsius.

7.3 **Table 2** shows the maintenance interval based on operating hours of the driver for LED fixtures.

Table 2 – Maintenance Interval based on operating hours for LED Streetlights.

Maintenance Interval			
Connecticut	**Eastern Mass.**	**Western Mass.**	**New Hampshire**
24 years	23.8 years	24 years	25.3 years

7.4 **Table 3** shows the expected life of LED fixtures and photocontrols and their respective estimated annual failure rate based on information received from Cooper Electric Lighting.

Table 3 – Expected lifetime and Annual Failure Rate

Expected Lifetime		Annual Failure Rate	
LED Streetlights	Typically, greater than 20 years	LED Electronics	Typically, 1%
		LED Lumen Depreciation	Typically,1-2%
Photocontrol	Typically, greater than 10 years	Photocontrol	Anticipated less than 1-2%

7.5 The maintenance activities and their schedules are based on industry Standards, manufacturer's recommendations, and Field experience.

Table 4 – Streetlight Maintenance Basis Documentation

Requirement	Basis
Maintenance	• A 15Y interval is recommended by approved manufacturers • ANSI/IES RP-8-21 guidelines and industry standard L70 – LED rated lumen maintenance life of an LED light source. • In addition to the expected lifetime of LED fixtures, expected lifetime of components within or installed on the fixture were taken into consideration. Refer to **Tables 2-3** and **Appendix A**. • A shorter Time-Directed interval is optional at the discretion of each operating company.

Appendix A

Appendix A, Table 1 – Operating Hours for LED Streetlights

Month -	Operating Hours (CT) -	Operating Hours (MA)				Operating Hours (NH)* -
		Greater Boston	Cambridge	South Boston	WMA	
January	433	439	418	418	433	421
February	365 (377)	367	355	355	365 (377)	350 (362)
March	364	364	347	347	364	342
April	310	310	296	296	310	286
May	280	284	270	270	280	257
June	251	257	244	244	251	230
July	269	275	260	260	269	248
August	301	307	292	292	301	283
September	334	338	321	321	334	316
October	388	392	373	373	388	372
November	413	417	396	396	413	399
December	442	450	428	428	442	433
Total	**4,150 (4,162)**	**4,200**	**4,000**	**4,000**	**4,150 (4,162)**	**3,937 (3,949)**

NOTE: The numbers in parenthesis indicate operating hours for a leap year for each state.

* The operating hours for NH were based on rate EOL.

Appendix A, Table 2 – Operating Hours of Optional Midnight service for LED Streetlights

Month	Operating Hours (CT)	Operating Hours (WMA)*	Operating Hours (NH)**
January	224	224	213
February	185 (192)	185 (192)	175 (181)
March	187	187	150
April	164	164	120
May	153	153	106
June	137	137	91
July	144	144	97
August	161	161	116
September	181	181	138
October	213	213	170
November	225	225	214
December	236	236	226
Total	**2,210 (2217)**	**2,210 (2217)**	**1,816 (1,822)**

NOTE: The optional Midnight service can be elected by customers for those who want the fixture to turn off at midnight.

* There are no operating hours of optional midnight service for LED streetlights for Eastern Massachusetts.

** The optional midnight service operating hours for NH were based on rate EOL.

APPENDIX 17

UNDERGROUND VAULTS AND MANHOLES

EVERSOURCE	EVERSOURCE MAINTENANCE PROGRAM ELECTRIC OPERATIONS ORGANIZATION

Underground Vaults and Manholes

Document Number:	**Issued Date**:	**Revised Date**:	**Revision**:	**Applicability:**
EMP 5.59	31-Mar-14	15-Aug-23	4	All

Scope:

The purpose of this document is to outline the minimum acceptable requirements for inspecting and maintaining Eversource underground vaults and manholes that contain equipment owned by Eversource, and to ensure they provide a safe working environment for those who enter the facilities, protect the equipment from water and/or debris that may enter the vault/manhole, and to assure public safety.

The underground equipment includes transformers, cables, and switchgear that will be maintained in accordance with the appropriate chapter of the Distribution Maintenance Program.

EVERSOURCE	EVERSOURCE MAINTENANCE PROGRAM ELECTRIC OPERATIONS ORGANIZATION

Underground Vaults and Manholes

Document Number:	**Issued Date**:	**Revised Date**:	**Revision**:	**Applicability:**
EMP 5.59	31-Mar-14	15-Aug-23	4	All

Rev No.	Description	Date
4	• Reformat the document. • Consolidate the distribution manhole inspection and change the frequency from 5 years to 10 years interval. • Add attachment 1 for CT DOT letter for structural integrity inspection. • Moved C1, C2, C3, and C4 severity levels to WMS 82.01 Manholes inspections and upgrades.	August 15, 2023
3	• Changed names of the Owner, SME, and Approvers on the Signature page, as required. • Revised incorporate Transmission Level inspections every 5 years. Basis and related references included. • Revised incorporate Transmission Level inspections every 5 years. Basis and related references included. • NU Maintenance Manual replace by Eversource Maintenance Program • CL&P Replaced by Eversource Connecticut. • WMECO replaced by Eversource Western Massachusetts. • PSNH replaced by Eversource New Hampshire. • NSTAR replaced by Eversource Eastern Massachusetts. • NUMM replaced by EMP.	June 1, 2015
2	• Changed approver names on the Signature page, as required. • Provided reference to NUMM 6.59C and 6.59D. • Incorporated applicable reference from NUMM 5.53 - Underground Customer Vaults, 5.54 - Underground Corrosion, 5.59 Under Ground Cables, 5.63 Sump Pumps. • Incorporated applicable Basis information from NUMM 5.53 - Underground Customer Vaults, 5.54 - Underground Corrosion, 5.59 Under Ground Cables, 5.63 Sump Pumps.	June 1, 2014
1	• Changed approver names on the Signature page, as required. • Deleted detail steps as they are now part of Instruction 6.59, 6.59A and/or 6.59B. • Extended Maintenance interval for routine inspection from 5 years to 10 years. • Added details for CL&P only that this References NUMM 6.59A and 6.59B. • Added references to PSNH Procedure CO-1004 and TD 921.	March 31, 2014

EVERSOURCE	EVERSOURCE MAINTENANCE PROGRAM ELECTRIC OPERATIONS ORGANIZATION

Underground Vaults and Manholes

Document Number:	**Issued Date**:	**Revised Date**:	**Revision**:	**Applicability:**
EMP 5.59	31-Mar-14	15-Aug-23	4	All

Approved by: *Signature on File* Date: 12-Apr-23
Jennifer J. Hebsch
Director, T&D Standards Engineering

Reviewed by: *Signature on File* Date: 08-Dec-22
Christopher P Soderman
Director, Transmission Engineering

Reviewed by: *Signature on File* Date: 08-Dec-22
John Di Paola-Tromba
Director, Asset Management

Reviewed by: *Signature on File* Date: 08-Dec-22
Wayne D. Gagnon
Director, Station Operations, CT

Approved by: *Signature on File* Date: 17-Apr-23
Anthony A. Anzalone
Director, Station Operations, MA

Approved by: *Signature on file* Date: 22-Nov-22
Eric R. Sutton
Director, Station Operations & Field Engineering, NH

Approved by: *Signature on file* Date: 09-Jan-23
Jason M Yergeau
Director, Electric Operations NH

EVERSOURCE	EVERSOURCE MAINTENANCE PROGRAM ELECTRIC OPERATIONS ORGANIZATION

Underground Vaults and Manholes

Document Number:	**Issued Date**:	**Revised Date**:	**Revision**:	**Applicability:**
EMP 5.59	31-Mar-14	15-Aug-23	4	All

Approved by: *Signature on File* Date: 02-Feb-23
Guerlemps Jean
Director, Field Engineering, MA

Approved by: *Signature on File* Date: 08-Dec-22
Mark P Baldwin
Director, Electric Operations, MA

Reviewed by: *Signature on File* Date: 08-Dec-22
Christopher A Menard
Director, Electric Operations, CT

Reviewed by: *Signature on File* Date: 08-Dec-22
Clifford G Williams
Director, Electric Operations, CT

Reviewed by: *Signature on File* Date: 08-Dec-22
Barry C Lashley
Director, Electric Operations, CT

Reviewed by: *Signature on File* Date: 08-Dec-22
Daryle L Brown
Director, Electric Operations, MA

Reviewed by: *Signature on File* Date: 08-Dec-22
Kevin R Saulnier
Director, Electric Operations, MA

Approved by: *Signature on File* Date: 30-Nov-22
David C Velez
Director, Electric Operations, MA

Table of Contents

Section		Page
1.0	Abbreviations	6
2.0	Maintenance Basis Documentation	6
3.0	Reference Documents	7
4.0	General	7
5.0	Inspection and Preventative Maintenance Schedule	7
6.0	Condition Based Maintenance (CBM)	8
7.0	Failure Finding	8

ATTACHMENT 1 – CT DOT Letter for Structural Integrity Inspections....9

1.0 Abbreviations

1.1 CT-DOT: State of Connecticut – Department of Transportations.

2.0 Maintenance Basis Documentation

2.1 The preventative maintenance activities and schedules outlined within this document are based on industry experience and/or best practice, manufacturer's recommendations, past company practices and inputs from Subject Matter Experts from Engineering, Operations, Field Engineering and T&D Standards.

2.2 Maintenance Activity Basis

Requirement	Basis
Major Distribution Level Inspection	Eversource Distribution manhole/vault and their equipment shall be inspected at a frequency of 10 years in Eversource system except for Boston proper, where the frequency is 4 years[1]. Routine Inspections of vault and manhole structures, anodes, and sump pumps (if exist) shall be visual inspections. Hammer testing may be used as needed. This inspection should be performed coincident with equipment maintenance frequencies. The inspection schedules and reports shall be maintained in **MAXIMO**.
Major Transmission Level Inspection	The inspection frequency to perform civil structural manhole/vault and cable system is 5 years in Eversource system except for Boston proper, where the frequency is 4 years[1]. **Note**: The inspection of the manholes listed by CT-DOT letter (see attachment 1) shall include hammer testing and approved by a CT Licensed Professional Engineer. All other Manhole/Vault structure's routine inspections, anodes, and sump pumps (if exist) shall be visual inspections; however, hammer testing may be used as needed. The inspection schedules and reports shall be maintained in **CASCADE**.
Routine Inspection – As Required	Inspection is performed to determine the condition of the structure and identifies the severity level of the required repairs (C1 through C4) in accordance with WMS 82.01.
Inspection/maintenance of customer-owned manhole/vaults	Customer-owned manholes/vaults shall be inspected coincident with Eversource manhole/vault maintenance frequencies.
Inspection/maintenance of Anodes	Inspection of the anodes shall be planned coincident with existing equipment inspections.

[1] Per DPU Docket EFSB22-01

3.0 Reference Documents

Eversource revised letter to CT-DOT dated March 31st, 2010, agreeing to perform structural integrity inspections of specific vaults located within CT-DOT paved roadways.

MA-DPU Docket number EFSB 22-01.

ESOP100 Switching and Tagging

WMS 82.01 Manhole Inspections and Upgrades

WMS 81.13 Underground Cable and Equipment Thermography

WMS 86.03 Vault Inspection

4.0 General

4.1 All equipment drawings and reference materials shall be reviewed prior to the work in manholes and vaults.

5.0 Inspection and Preventative Maintenance Schedule

Inspection & Maintenance Schedule (Note 1)					
Inspection Type	**Inspection Interval**				
	CT	**NH**	**WMA**	**EMA**	**BOSTON PROPER**
Time-Directed Maintenance (PM & Inspections)					
Major Distribution Level Inspection	10Y	10Y	10Y	10Y	4Y
Major Transmission Level Inspection	5Y	5Y	5Y	5Y	4Y
Condition-Based Maintenance					
C1 Vaults/Manholes – Major Maintenance	A/R	A/R	A/R	A/R	A/R
C2 Vaults/Manholes – Major Maintenance	A/R	A/R	A/R	A/R	A/R
C3 Vaults/Manholes – Major Maintenance	A/R	A/R	A/R	A/R	A/R
C4 Vaults/Manholes – Major Maintenance	A/R	A/R	A/R	A/R	A/R
Routine Inspection (**Note 2**)	A/R	A/R	A/R	A/R	A/R
Correct any defects found during Routine Inspection, if possible	A/R	A/R	A/R	A/R	A/R
Change Condition Rating of work site	A/R	A/R	A/R	A/R	A/R
Condition Monitoring					
Condition Monitoring	N/A	N/A	N/A	N/A	N/A
Failure Finding					
Report defect conditions for underground vaults and manholes	A/R	A/R	A/R	A/R	A/R

Note 1:	Defects found during planned maintenance and/or inspection may result in reclassification of the structure conditions as C1, C2 or C3 severity levels as defined in WMS 82.01.

Note 2:	**IN NO CASE** shall the period between inspections exceed the frequencies defined in the table above.

6.0 Condition Based Maintenance (CBM)

6.1 Test, assess and prepare the underground vaults and manholes to be safe for entry.

6.2 Condition Based Maintenance shall not exceed the frequency required to ensure the safety of those workers who enter the facilities and the protection of the equipment within.

6.3 Equipment (Cable, switches, Transformers and splices and accessories) shall be performed visually and/or by non- invasive (IR imaging).

7.0 Failure Finding

A failure report shall be completed and placed in the appropriate failure tracking system (Maximo, Cascade, etc.).

ATTACHMENT 1 – CT DOT Letter for Structural Integrity Inspections

Connecticut
Light & Power
The Northeast Utilities System

The Connecticut Light and Power Company
P.O. Box 270
Hartford, CT 06141-0270
(860) 947-2000
www.cl-p.com

March 31, 2010

Mr. Thomas A. Harley, Chief Engineer
Connecticut Department of Transportation
Bureau of Engineering and Highway Operations
2800 Berlin Turnpike
Newington, CT 06131-7546

RE: Splice Vault Structural Integrity Inspection Program for the Existing 345/115 kV Transmission Vaults Under Dockets 217, 272, and 292

Dear Mr. Harley:

Attached is the Splice Vault Structural Integrity Inspection Program that we sent to the Department on December 16, 2008, revised to address the design load rating of the splice vaults for the Bethel-Norwalk project (Docket 217). This project was designed prior to the Department initiating the Design Operating Vehicle load requirement, therefore the splice vaults were designed to accommodate the AASHTO HS-20 design vehicle.

Regards,

Anne Bartosewicz
Project Director

c: Joseph Obara – ConnDOT
Sohrab Afrazi – ConnDOT

SPLICE VAULT STRUCTURAL INTEGRITY INSPECTION PROGRAM FOR NORTHEAST UTILITIES VAULTS LOCATED WITHIN ConnDOT ROADWAYS for the MIDDLETOWN-NORWALK 345-KV PROJECT, GLENBROOK CABLES 115-KV PROJECT, and BETHEL-NORWALK 345-KV PROJECT

For splice vaults for the Middletown-Norwalk (MN) and Glenbrook Cables (GC) projects located within ConnDOT roadways, the design and inspection program is to comply with the requirements outlined in the ConnDOT letter dated November 1, 2005 from Art Gruhn, ConnDOT Bureau Chief, to Anne Bartosewicz, NU's Project Director. In summary, the splice vault design for the MN and GC projects shall at minimum accommodate the AASHTO HS-20 design vehicle, and shall be checked for ConnDOT's Design Operating Vehicle, which is a 204 kip, 8-axle vehicle. The Design Operating Vehicle is the critical loading condition and additionally it satisfies the AASHTO HS-25 design vehicle loading condition. The splice vaults for the Bethel-Norwalk (BN) project were designed at a minimum to accommodate the AASHTO HS-20 design vehicle. ConnDOT instituted the Design Operating Vehicle requirement after the BN project was designed and therefore it was not considered in the BN vault design. The inspection requirements include the preparation of inspection reports by a Connecticut licensed professional engineer, and submission of the reports to ConnDOT, all in accordance with ConnDOT's Bridge Inspection Manual (in particular, the Culvert section of the Manual). These inspection requirements are addressed in the following section and apply to the vaults identified in Exhibit A attached hereto, which also includes the vaults installed within the paved roadway of a State highway for the BN project.

INSPECTION FOR STRUCTURAL INTEGRITY

The splice vault inspection for structural integrity will be conducted at an interval no greater than 5 years, with an increased frequency should a defect be identified, and the report shall be signed and sealed by a Connecticut licensed professional engineer. Such an inspection cycle will provide a continuous condition evaluation record of the vault. Should defects be discovered that present a hazard to the safe passage across the vault, ConnDOT is to be immediately notified and appropriate follow-up actions are to be taken. As part of the inspection program, the load rating (live load carrying capacity) is to be computed using the Load Factor Method and updated incorporating the effects of any structural deficiencies. Future ConnDOT requirements may change the load rating computation method to the Load and Resistance Factor Rating method.

The components of the vault are to be evaluated for their current physical state and rated in accordance with the Condition Rating Coding System in ConnDOT's Bridge Inspection Manual. The visual inspection may find signs of distress, distortions, latent defects, loss of section, or deterioration. All exposed surfaces of concrete should be tapped with a hammer to locate delaminations or other deficiencies. Special attention must be given to not damage the electric cables and equipment in the vaults during the hammer testing.

All observed deficiencies and deteriorations should be documented with the dimensions of the length, width, height, depth of loss, orientation and location relative to a fixed, easily identifiable point. Particular care shall be given to documenting any increase in quantity or size of deterioration which have changed since the last inspection.

Photographs shall be taken of all components of the vault and detailed photographs shall be taken of all deficient areas.

In some instances of deterioration additional non-destructive testing may be required to correctly determine the extent of the deficiency. A vault with known deficiencies and/or questionable conditions may require more frequent inspections.

To record the findings of each inspection, a prepared set of drawings will be provided to the inspecting engineer for delineating any and all deficiencies. These drawings will become part of the inspection report. The structural integrity inspection may occur concurrently with the utilities' periodic inspection of their electric facilities.

EXHIBIT A

LIST OF VAULTS IN CONNDOT ROADWAYS
SUBJECT TO STRUCTURAL INTEGRITY INSPECTION PROGRAM

MIDDLETOWN-NORWALK PROJECT (CSC Docket # 272)
25 Vaults

Vault #s	Location	Municipality
4901, 5801	Housatonic River boat ramp near I-95	Milford
6407, 7507	159 Westport Avenue (US 1)	Norwalk
6416, 7516	245 Post Road East (US 1)	Westport
6421, 7521	1050 Post Road East (US 1)	Westport
6422, 7522	1200 Post Road East (US 1)	Westport
6431, 7531	2269 Post Road (US 1)	Fairfield
6432, 7532	1949 Post Road (US 1)	Fairfield
6433, 7533	1643 Post Road (US 1)	Fairfield
6435, 7535	1055 Post Road (US 1)	Fairfield
6438, 7538	122 Post Road (RTE 130)	Fairfield
6440, 7540	Fairfield Avenue (RTE 130) & Gilman Street	Bridgeport
6441	2704 Fairfield Avenue (RTE 130)	Bridgeport
6443, 7543	2098 Fairfield Avenue (RTE 130)	Bridgeport

GLENBROOK PROJECT (CSC Docket # 292)
29 Vaults

Vault #s	Location	Municipality
4000, 6200	MNRR Property on Hamilton Avenue	Stamford
4004, 5004, 6204	Darien Service Area	Darien
4005, 5005, 6205	Darien Service Area	Darien
4007, 5007, 6207	MNRR Noroton Heights Parking Lot	Darien
4013, 5013, 6213	MNRR Mechanics Street Parking Lot	Darien
4015, 5015, 6215	455 Post Road (US 1)	Darien
4017, 5017, 6217	54 Post Road (US 1)	Darien
4022, 5022, 6222	247 Post Road (US 1)	Norwalk
4023, 5023, 6223	147 Post Road (US 1)	Norwalk
4027, 5027, 6227	29 Van Buren Avenue (US 1)	Norwalk

3 of 4

Revised 3/31/10

EXHIBIT A

LIST OF VAULTS IN CONNDOT ROADWAYS
SUBJECT TO STRUCTURAL INTEGRITY INSPECTION PROGRAM

BETHEL-NORWALK PROJECT (CSC Docket # 217)
26 Vaults

Vault #	Location	Municipality
2511	Putnam Park Road (RTE 58) 1820' south of Dodgington Road (RTE 302)	Bethel
2512	Putnam Park Road (RTE 58) 1860' south of Dodgington Road (RTE 302)	Bethel
2519	Redding Road (RTE 107) 540' south of Peaceable Street	Redding
2520	Redding Road (RTE 107) 820' north of Meadow Ridge	Redding
2523	RTE 7 3460' south of RTE 107	Redding
2301	RTE 7 680' south of Wilton Acres	Wilton
2302	RTE 7 290' south of Hollyhock Lane	Wilton
2303	RTE 7 830' south of Kensett Avenue	Wilton
2304	RTE 7 410' south of Heathcote Road	Norwalk
2305	RTE 7 (Main Avenue) north of Grist Mill Road	Norwalk
2306	RTE 7 (Main Avenue) 600' north of Valley View Road	Norwalk
2307	RTE 7 (Main Avenue) 810' north of O'Donnell Road	Norwalk
2308	RTE 7 (Main Avenue) at Merritt Parkway (east) exit ramp	Norwalk
2309	RTE 7 (Main Avenue) 200' north of Linden Street	Norwalk
2310	RTE 7 (Main Avenue) 350' north of Broad Street	Norwalk
2002	Putnam Park Road (RTE 58) 1100' south of Hoyts Hill Road	Bethel
2003	Putnam Park Road (RTE 58) 2820' south of Hoyts Hill Road	Bethel
2004	Putnam Park Road (RTE 58) 420' north of Sunset Hill Road	Bethel
2005	Putnam Park Road (RTE 58) 3000' south of Sunset Hill Road	Bethel
2006	Putnam Park Road (RTE 58) 4650' south of Sunset Hill Road	Bethel
2007	Putnam Park Road (RTE 58) 1600' north of Putnam Park entrance	Redding
2009	RTE 107 1730' south of Putnam Park entrance	Redding
2010	RTE 107 700' south of Musket Lane	Redding
2011	RTE 107 1000' south of Lonetown Road	Redding
2012	RTE 107 at John Reed Road	Redding
2013	RTE 107 1970' south of John Reed Road	Redding

4 of 4

Revised 3/31/10

EVERSOURCE	WORK METHOD STANDARD ELECTRIC OPERATIONS ORGANIZATION

Underground Cable & Equipment Thermography

Document Number:	Issued Date:	Revised Date:	Revision:	Applicability:
WMS 81.13-234	15-Aug-23	---	0	CT/WMA/NH

Scope:

This standard outlines the proper methods used to perform thermography on distribution Underground (UG) equipment, including cable and cable accessories inside manholes and vaults.

Safety:

Providing a work environment, free of recognized hazards is a value at Eversource. Therefore, prior to the start of any work, ensure that you are familiar and knowledgeable with all Eversource Safety Rules, Policies and Procedures that are applicable to the work and tasks at hand and perform a job brief at the job site, prior to commencing work. PPE requirements to protect the worker shall be followed as required in the Eversource Employee Safety Manual.

Rev No.	Description	Date
0	Original Document.	August 15, 2023

EVERSOURCE	WORK METHOD STANDARD ELECTRIC OPERATIONS ORGANIZATION

Underground Cable & Equipment Thermography

Document Number:	Issued Date:	Revised Date:	Revision:	Applicability:
WMS 81.13-234	15-Aug-23	---	0	CT/WMA/NH

Reviewed by: *Signature on File* Date: 27-Apr-23
Jonathan Duffy
Director, Safety

Approved by: *Signature on File* Date: 15-Mar-23
Jennifer Hebsch
Director, T&D Standards Engineering

Approved by: *Signature on File* Date: 24-Apr-23
Umair Zia
Director, Distribution Engineering

Approved by: *Signature on File* Date: 01-May-23
Jay Yergeau
Director, Electric Operations - NH

Approved by: *Signature on File* Date: 09-Aug-23
David Velez
Director, Electric Operations – WMA

Approved by: *Signature on File* Date: 31-Jul-23
Christopher Menard
Director, Electric Operations – CT, Central

Approved by: *Signature on File* Date: 09-Aug-23
Barry Lashley
Director, Electric Operations – CT, Eastern

Approved by: *Signature on File* Date: 10-Aug-23
Clifford Williams
Director, Electric Operations – CT, Western

Table of Contents

Section **Page**

1.0 Introduction 4
2.0 Reference Documents....4
3.0 Bill of Materials....4
4.0 Definitions 4
5.0 General 5
6.0 Non-targeted (Planned Entry for Scheduled Work) 6
7.0 Targeted (Preventative Maintenance Inspection) 6
8.0 Prerequisites 6
9.0 Camera Setup 7
10.0 Camera Operation....9
11.0 Energized Cable Inspection 9
12.0 Energized UG Equipment....11
13.0 Document Findings 11
14.0 Corrective Actions for Temperature....12
15.0 Connection Measurement Points 14

Attachment 1 – Example Form OP-5121 for UG Thermography 1

1.0 Introduction

1.1 Thermal analysis allows for non-intrusive analysis of thermal characteristics of equipment. Early detection permits more effective maintenance and scheduling of outages.

1.2 Heat is produced in all energized equipment. Temperatures will rise at different levels based on load level and equipment operational conditions and age.

1.2.1 Infrared (IR) thermography can measure the temperature around the equipment and is a proven predictive maintenance technique.

1.3 Determining the existing condition of cable and cable accessories is an essential step in reducing the risk of failure. A study of the current loading on UG equipment will show increased heat for higher rated equipment.

1.4 The thermography camera will quickly detect hot spots and localized heating caused by bad connections, splices, terminations, blocked oil flow, radiator obstruction, cable degradation, etc.

2.0 Reference Documents

Form OP-5121	Underground Thermography Form (form database)
TD 853	Infrared Thermographic Inspections
TD 955	Confined Space Requirements
WMS 82.01-234	Manhole Inspections & Upgrades
Owner's Manuals	FLIR E76, Fluke Ti401 PRO

3.0 Bill of Materials

Ref. #	Description	Eversource Item No.
1	FLIR Camera Model E76	620291
2	Fluke Ti401 PRO	620313

NOTE: For thermographic cameras not included in the "Bill of Materials", follow the manufacturers' instructions as it pertains to the camera setup and operation.

4.0 Definitions

4.1 Abnormality – Refers to localized heating or a "hot spot" on cables/equipment and cable accessories.

NOTE: Cables should exhibit consistent temperatures or minor temperature change along its length within a manhole or vault under normal conditions.

4.2 Cable Accessories – Refers to joints, elbows and terminations which can be constructed from tape, pre-mold, heat shrink, or cold shrink technology.

4.3 Emissivity – A term representing how much radiation an object emits. The opposite of emissivity is reflectivity. The emissivity determines how much of the radiation originates from the object as opposed to being reflected by it.

4.4 Hot Spot Temperature – A localized portion of a cable circuit or piece of equipment that exhibited a higher temperature over a small surface area compared to the reference temperature. This could be taken using the thermal camera's laser pointer, generally considering the emissivity of the object.

4.5 Non-targeted (Planned Entry for Scheduled Work) – Refers to trouble work or a safety inspection for a quick sweep and visual analysis of the location. Inspection form not required.

4.6 Reference Temperature – The temperature of the cable or equipment surface measured one (1) foot from the duct entrance. This temperature should be the same across the joint towards the opposite duct entrance.

4.7 Reflected Temperature/Reflectivity – The temperature parameter/term which is used when compensating for the radiation from the surroundings reflected by the object into the camera. This property of the object is called "reflectivity".

4.8 Targeted (Preventative Maintenance Inspection) – Refers to the entire IR thermography process to be followed. Inspection form is to be filled out.

4.9 Temperature Differential (ΔT) – The temperature difference between the hot spot point and the reference temperature.

4.10 Thermography – A technique used to translate heat radiated by an object in the infrared spectrum into the visible spectrum.

5.0 General

5.1 Only employees who have practiced thermography shall perform thermal imaging on cable, UG equipment, and cable accessories in manholes and vaults.

5.2 Thermographic inspections shall be performed where surroundings allow for the thermographer to not contact any equipment.

5.3 Thermal scans provide information regarding the thermal condition of surrounding energized cables, UG equipment, and cable accessories prior to performing work.

5.4 Circuit loading must be considered when inspecting the cable or cable accessory.

5.4.1 Comparative inspections should be done under similar loading as the last inspection.

5.4.2 Contact the System Control Center for cable/equipment loading or use an amp meter onsite.

5.5 Comparing the IR image and the current flowing in a phase of a circuit to the other phases, of the same circuit, is important to find abnormalities. Make sure:

5.5.1 The materials are similar.

5.5.2 All phases are the same distance from the thermal camera.

5.5.3 All phases should have a temperature differential acceptable from that shown in Table 2.

5.6 Operate a thermal camera in accordance with their operating manual instructions.

5.6.1 There is a minimum five minute warm up period for thermal cameras.

5.7 Thermal scans shall only be performed on energized cable, cable accessories and electrical equipment that are in service carrying load current.

CAUTION: De-energized equipment does not emit proper temperatures to detect abnormal conditions.

5.8 Cable and cable accessories that have been submerged in water (a heat sink) may experience a rise in temperatures as the water is removed. The thermal camera is not designed to scan cables underwater.

6.0 Non-targeted (Planned Entry for Scheduled Work)

6.1 Refers to a non-targeted, trouble work, or a safety inspection for a quick sweep and visual analysis of the location.

6.1.1 This includes unplanned power restoration, leak-locating, or fault-locating activities.

6.1.2 All requirements regarding prerequisites and camera setup sections of this document shall be completed prior to entry.

6.2 Scan cable runs from the point they enter a structure to the point they exit the structure looking for abnormalities.

6.3 The inspection form in Attachment 1 is NOT required to be filled out for non-targeted inspections.

6.3.1 If a hot spot temperature is found, and the temperature differential is classified as a priority according to Table 2, then a form shall be filled out.

7.0 Targeted (Preventative Maintenance Inspection)

7.1 Refers to a targeted inspection, where the entire IR thermography process is to be followed.

7.1.1 All requirements regarding prerequisites and camera setup sections of this document shall be completed prior to entry.

7.2 The inspection form in Attachment 1 shall be completed each time a “targeted or planned” thermographic inspection is performed.

8.0 Prerequisites

8.1 Prior to entering a manhole or vault, review and follow the requirements set forth in **TD955** (confined space requirements).

8.2 The thermal camera can only measure surface temperature for objects within the camera’s field of view.

8.2.1 For cable or equipment that are hard to reach or access, consult your applicable supervision for additional provisions that may need to be made to perform the thermal scan.

8.3 To prevent eye damage and personal injury:

8.3.1 Do not look into the laser.

8.3.2 Do not point the laser directly at persons or animals or indirectly off reflective surfaces.

NOTE: All thermal images taken by the camera carries with it two images when downloaded; the "natural" light or normal photo and its thermal photo. There is no need to shut off the thermal colors for a normal shot.

9.0 Camera Setup

** Prior to performing a thermographic inspection, setup the camera accordingly:*

9.1 Check Basics

9.1.1 Ensure the memory card is installed.

9.1.2 Check that the battery is charged.

9.2 Defaults

9.2.1 Camera default parameters are shown in Table 1.

Table 1 – Default Parameters

Parameter	Value *
Object Distance (approx.)	3.3 ft (1 m)
Atmospheric Temperature	20° C (69° F)
Relative Humidity	50%
Reflected Temperature	20° C (69° F)
Emissivity	0.95

* If you are unsure about the values, the following are defaulted.

9.3 Adjust Settings

9.3.1 Set current date and time.

9.3.2 Turn ON the "IR Fusion" setting by selecting "IR 100%".

9.3.3 Turn ON the "Spot Markers" setting (preferred) shows 3 temps on one image.

Space Intentionally Left Blank

9.3.4 Set the image adjustment mode to “Manual”.

.4.1. Select (Settings) > Device settings > User interface options

.4.2. Then, select Temperature Scale and Manual.

NOTE: In manual mode, it is more possible to detect abnormalities and smaller temperature differences in the part of the image of interest, for two reasons. Refer to Figure 1.

a. The temperature scale/range can be manually adjustable to values close to the temperature of a specific object in the image. Rather than the camera continuously adjusting the range for the best image presentation.

b. The colors are distributed evenly from the lowest to the highest temperature, referred to as “linear color distribution”. Rather than colors distributed based on the thermal content of the image, referred to as “histogram color distribution”.

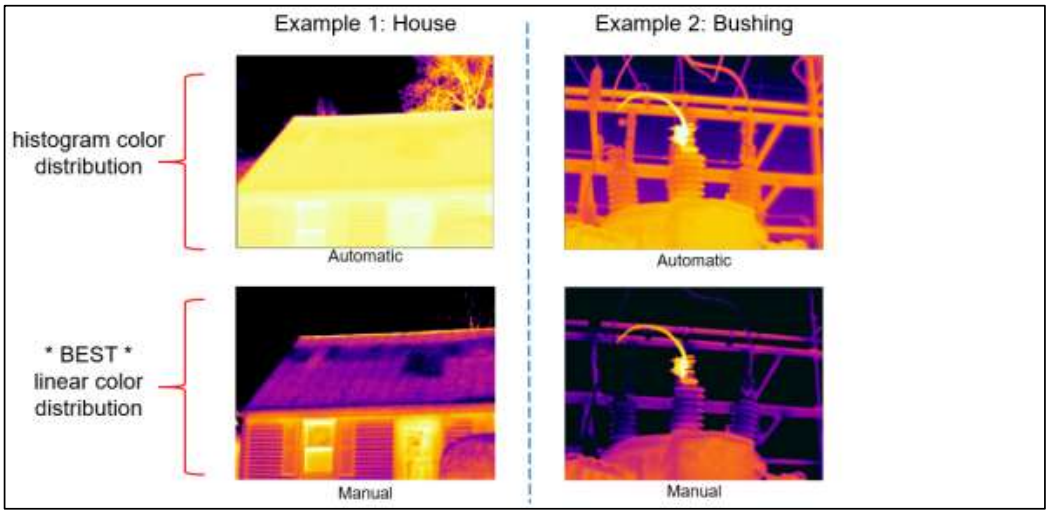

Figure 1 – Manual Mode is Best

9.3.5 Set the ambient or background (BG) temperature.

.5.1. Get by pointing laser at a non-electrical surface, then change “BG” to it.

9.3.6 Check the emissivity value is 0.95, which the camera should be defaulted to.

NOTE: If the emissivity is set to a low value, the reflected temperature becomes important. Emissivity and reflected temperature are the two most important measurement parameters to set correctly in the camera.

9.4 Always focus the camera before recording the thermal image. Poorly focused images will not give the correct temperatures.

9.4.1 Staying back 2 feet helps for focusing.

9.4.2 The camera can be focused manually with the focus ring or by using the auto focus feature.

10.0 Camera Operation

10.1 Let the camera warm up for a minimum of five minutes.

10.2 Point the thermal imaging camera as close to perpendicular to the target surface as possible. See Figure 2.

10.3 Measurement points are shown by red circles in Figures 4 through 9 (section 15.0).

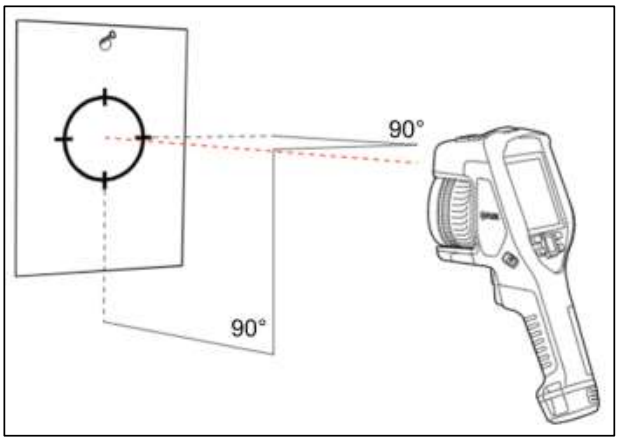

Figure 2 – Position of Thermal Camera to Target

10.4 For joints, the cable on both sides of the joint shall be included in the image for temperature differential identification.

10.5 For terminations, the cable and the connecting equipment shall be included in the image for temperature differential identification.

10.6 Identify and/or verify each abnormality by duct placement, where practicable, and/or by using maps, geographic location, and other equipment as reference points.

10.7 For each abnormality found, record and save two (2) images.

10.7.1 Record a focused thermal image at the localized hot spot.

10.7.2 Record a focused natural light image.

11.0 Energized Cable Inspection

11.1 Surface temperatures above 194° F (90° C) indicate that the cable is operating above its maximum conductor temperature rating.

11.1.1 Load level shall be checked if the cable is operating above its maximum conductor temperature.

11.1.2 It is a sign of cable degradation if the loading level is below the cable ampacity.

11.2 Scan cable runs from the point they enter a structure to the point they exit the structure looking for abnormalities.

STOP *Stop here if performing a Non-targeted inspection.* STOP

11.3 Take thermal images of three (3) locations for each cable run, refer to the illustration in the Form:

11.3.1 Cable entering conduit 1-foot off wall.

11.3.2 Joint/Splice connector.

11.3.3 Cable exiting conduit 1-foot off wall.

11.4 For a three-phase run, scan nine (9) surface temperature differentials (alternative see NOTE box below), labeled as Cable 1 (C1), Cable 2 (C2), and Cable (C3). Refer to Figure 3.

11.4.1 C1: Cable Entering, C2: Cable Entering, C3: Cable Entering

11.4.2 C1: Joint, C2: Joint, C3: Joint

11.4.3 C1: Cable Exiting, C2: Cable Exiting, C3: Cable Exiting

NOTE:	For triplex cables with a tight lay, three (3) scans will suffice for surface temperature differentials.

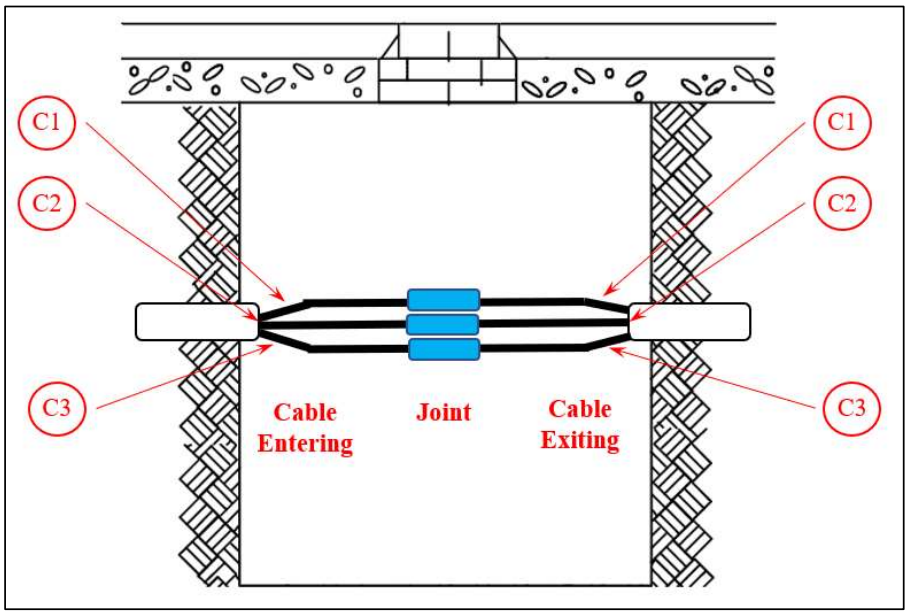

Figure 3 – UG Cable Scanning Locations

11.5 Scan cables and cable accessories to determine the surface temperature.

11.5.1 Scan cables from a point 1-foot off entering the structure to a point 1-foot off exiting the structure.

11.5.2 Scan the splice point of the cable(s), the joint connector.

11.6 A localized temperature rise over the rest of the cable may point out signs of possible deterioration that could lead to a future failure. Refer to section 14.0 of this standard.

12.0 Energized UG Equipment

12.1 Underground equipment (i.e. switchgear & oil-filled transformers) can exhibit external and internal connection problems, the thermal camera will be used to look at external components.

NOTE:	For thermography to be effective in pinpointing an internal transformer problem, the malfunction must generate enough heat to be detectable on the outside i.e. internal bushing connections, tap changers.

12.2 Use the thermal camera to scan components of UG equipment such as:

12.2.1 High and low voltage bushing/elbow connections

12.2.2 Terminal Lugs

12.2.3 Transformer Surface

12.2.4 Cooling tubes

STOP *Stop here if performing a Non-targeted inspection.* STOP

12.3 Scan all connections, ground points, neutrals, and components listed above if applicable. See the Form in the back of this standard for details.

NOTE:	Overheating in a connection indicates high resistance and that the connection is loose or dirty. Look for unbalance and overloading between phases. Cooling tubes will normally appear warm. If one or more tubes are comparatively cool, oil flow is being restricted and the root cause of the problem needs to be determined.

12.4 The top oil temperature shall NOT exceed 203° F (95° C). The life cycle of transformer may be impacted and damage could occur.

12.4.1 A 18° F (10° C) oil temperature rise above 203° F (95° C) will reduce a transformer's life by 50 percent.

12.4.2 If the top oil temperature measurement exceeds 203° F (95° C), notify your applicable supervision. Action to reduce the load is required.

13.0 Document Findings

13.1 Refer to Attachment 1 as an example for the form used to document findings.

13.2 Search the Forms Management database for form number OP-5121.

13.2.1 Enter the results to the form.

NOTE:	The tool and/or means for accepting an electronic touch screen form is not setup. Eversource is transitioning away from the bandwidth limited ClickMobile tool and eventually replacing it with, and implementing, the new tool called IFS cloud solutions.

13.3 Consult appropriate supervision for placement of thermal images taken and corresponding form(s) from your inspection.

13.4 Follow agreed upon local work practices to export all images from the camera to a computer.

13.4.1 Use the camera's provided cable to connect to a computer or download images from the micro SD card directly.

13.5 Search the Eversource intranet SharePoint folder for image and form repository per State.

13.6 Transfer images and form(s) to the appropriate folder and label consistently.

13.6.1 Rename and save the files as follows, separated by underscores:

- Operating Company _ Year.Month _ MH/VLT # _ Circuit #

14.0 Corrective Actions for Temperature

14.1 When the thermographic inspection is complete, determine if corrective actions are required, refer to Table 2.

14.1.1 For abnormalities and/or "hot spots", check the temperature differential column using your scanned results.

14.2 Recommended responses are listed for temperature differentials. See Table 2.

Table 2 –Temperature & Recommended Response

Infrared Classification	Temperature [1] Differential Range (Hot Spot - Reference)	Eversource Recommended Action
Priority 4	13° F to 25° F (7° C to 14° C)	Monitor quarterly going forward
Priority 3	26° F to 40° F (14° C to 22°C)	Indicates probable deficiency; Monitor monthly going forward, repair as time allows
Priority 2	41° F to 165° F (23° C to 92° C)	Major discrepancy; repair within 30 days
Priority 1	> 166° F (92° C)	Major discrepancy; repair within 5 days

Notes:
(1) For cable, do not exceed the reference maximum conductor temperature of **194° F (90° C)** at any point along the cable run. Notify your Supervisor because the load level shall be checked if the cable is operating above its maximum conductor temperature. It is a sign of cable degradation if the loading level is below the cable ampacity.

(2) When secondary cables are found deficient and time permits, repairs should be made.

14.3 If there are any questions about the Eversource recommended action contact your Supervisor.

14.4 The consulted appropriate supervision may elevate required actions based on factors that included but are not limited to:

14.4.1 Size of space where the anomality is found.

14.4.2 Placement of the anomality in relationship to the worker.

14.4.3 Position or condition of the anomality (stress, bending, pitting, corrosion issues).

14.4.4 Abnormalities that could lead to or be an indication of an impending fault.

14.4.5 A rising trend in temperature during monitoring.

14.5 For a temperature differential greater than 166 °F:

14.5.1 Exit workspace and reduce loading.

14.5.2 When abnormal conditions are found, requiring the immediate evacuation of a manhole or vault, appropriate supervision shall be notified as soon as possible, to determine the necessary corrective action.

14.5.3 After discussion with an Underground Construction & Maintenance supervisor or manager, notify the applicable Designated Authority.

NOTE: Feeder off-loading (load shedding) may be necessary if it cannot be de-energized.

15.0 Connection Measurement Points

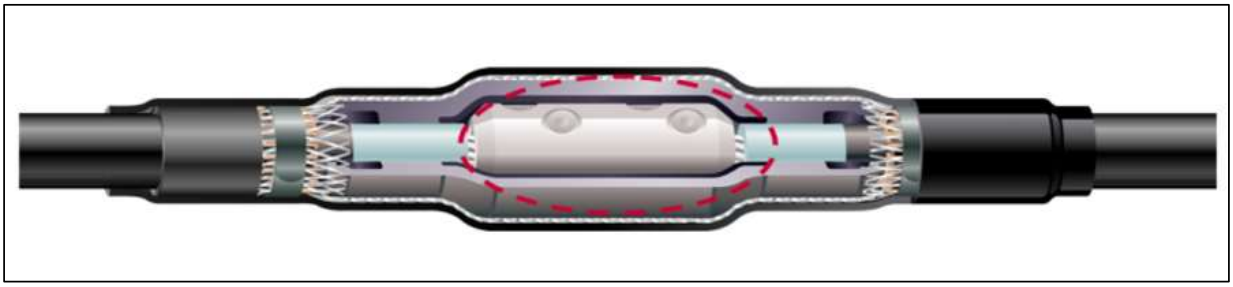

Figure 4 – Cold Applied Joint Connection Measurement Point

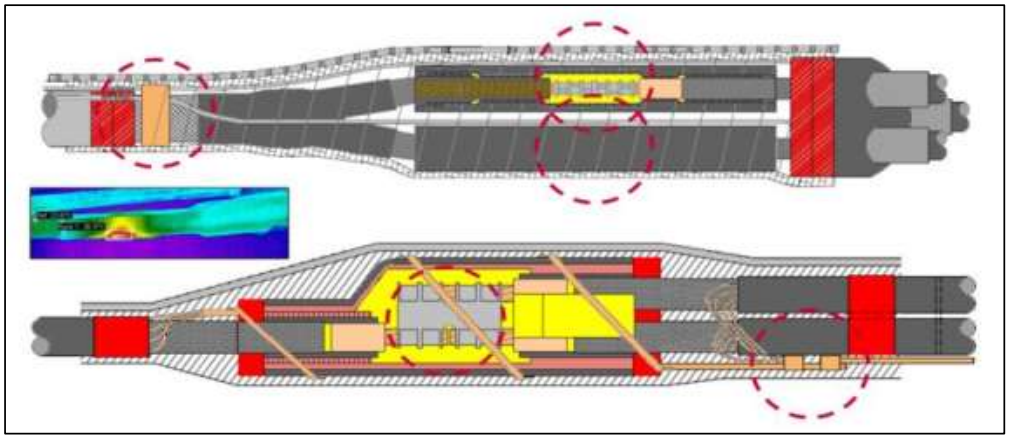

Figure 5 – Heat Shrink Joint Connection Measurement Point

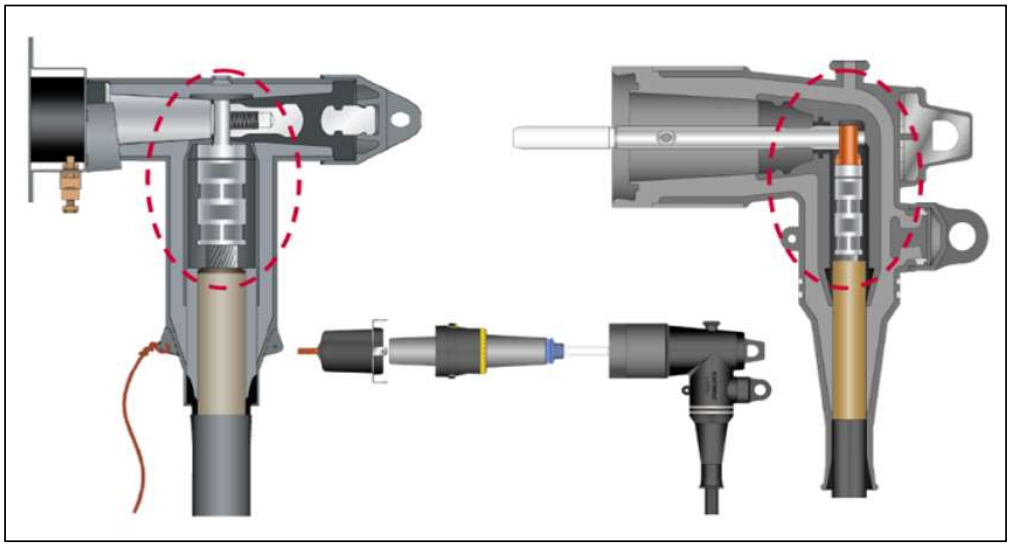

Figure 6 – Elbow Connectors

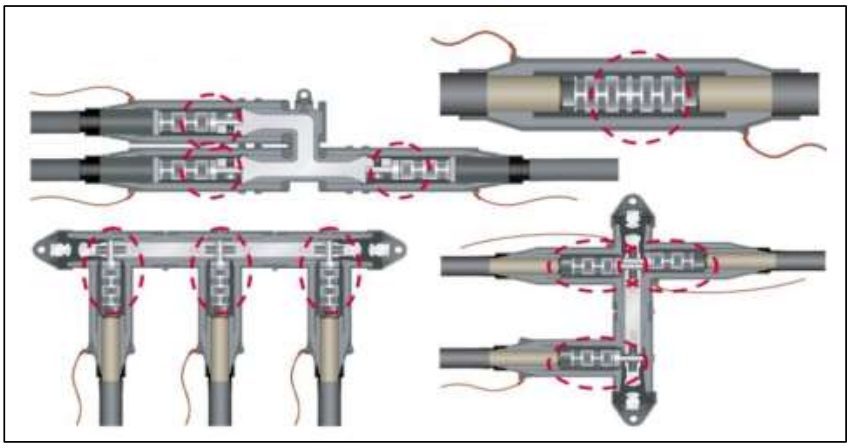

Figure 7 – Pre-molded Joints / Disconnectable

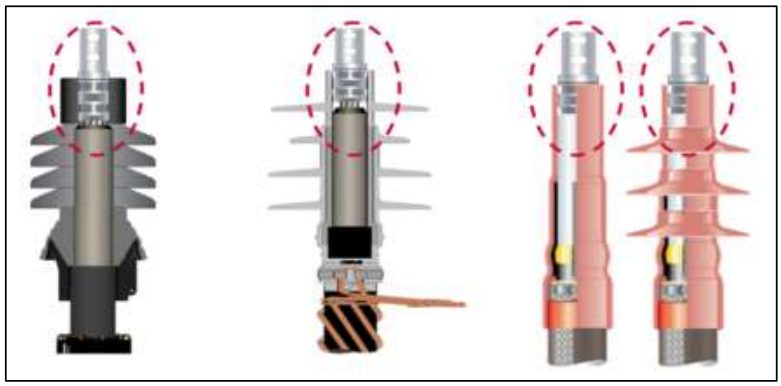

* The bolted lug is a direct measurement (exposed & non-insulated).
** The crimped connector is an indirect measurement.

Figure 8 – Terminations / Risers



Figure 9 – Surge Arresters

Attachment 1 – Example Form OP-5121 for UG Thermography

EVERSOURCE

MH # | WO # | Date ___ / ___ / ____

Street | Employee #

Town | Circuit # | (other) crt #

UG Division/Area | Inspected By

Time of Day : | Outside Temp ° F | Other (write in)

IR Camera Used O FLIR E76 O Fluke Ti401 PRO

VISUAL INSPECTION: **INTRO**

MH Cover Type: (fill one) O Vented O Solid

MH Evaluation/Congestion: O Good O Moderate O Poor O Severe

MH Water Pumped: O Yes O No

UG Equipment Present: O Yes O No If yes, explain: (i.e. 1-phase/3-phase, qty each)

UG Equipment Scanning: O Yes O No

Equipment Type: O Oil-filled O Air Insulated O SF6 Gas O Solid Dielectric O Other (write above)

Equipment Manufacturer: (write in)

Equipment Condition: O Good O Moderate O Poor O Severe

(explain) look for mud, rust, corroded bolts and pins, and motor linkage damage.

Cable Joint Scanning O Yes O No

Joint Type: O Heat Shrink O Cold Applied O Pre-mold/Quick-splice

Joint Voltage: O 5 kV O 15 kV O 25 kV O 35 kV

Joint Makeup: O Straight Joint, (1/C to 1/C or 3/C to 3/C)

O Transition Straight Joint, (1/C lead to 1/C rubber)

O Transition Trifurcating Joint, (3/C lead to 3-1/C rubber or lead)

O Branch, Y-Type (Wye), Single Multiple

O Branch, H-Type, Double Multiple

EXAMPLE

**** IR scans shall only be performed on **energized** primary cable, cable accessories and electrical equipment that are in service carrying load current ****

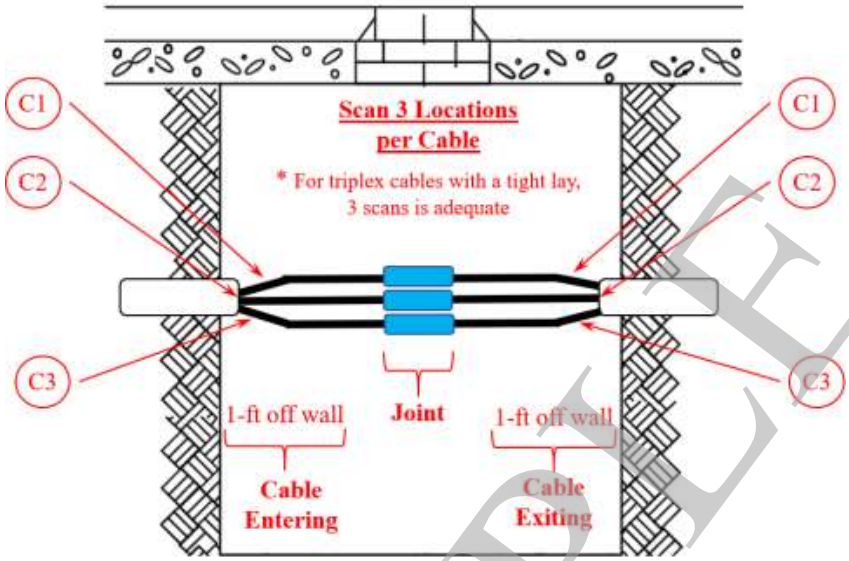

CABLE 1: (for Triplex cables with a tight lay, only finish Part 1)					**C1**
Use IR Camera to Scan & Capture Temperature: (Check 3 Locations)			C1: Reference Temperature		
Temperatures					
C1: Cable Entering	C1: Joint	C1: Cable Exiting	C1: Cable Loading	C1: Cable Size	

CABLE 2: (middle phase)					**C2**
Use IR Camera to Scan & Capture Temperature: (Check 3 Locations)			C2: Reference Temperature		
Temperatures					
C2: Cable Entering	C2: Joint	C2: Cable Exiting	C2: Cable Loading	C2: Cable Size	

CABLE 3:					**C3**
Use IR Camera to Scan & Capture Temperature: (Check 3 Locations)			C3: Reference Temperature		
Temperatures					
C3: Cable Entering	C3: Joint	C3: Cable Exiting	C3: Cable Loading	C3: Cable Size	

EXAMPLE

**** IR scans shall only be performed on* ***energized*** *primary cable, cable accessories and electrical equipment that are in service carrying load current* *********

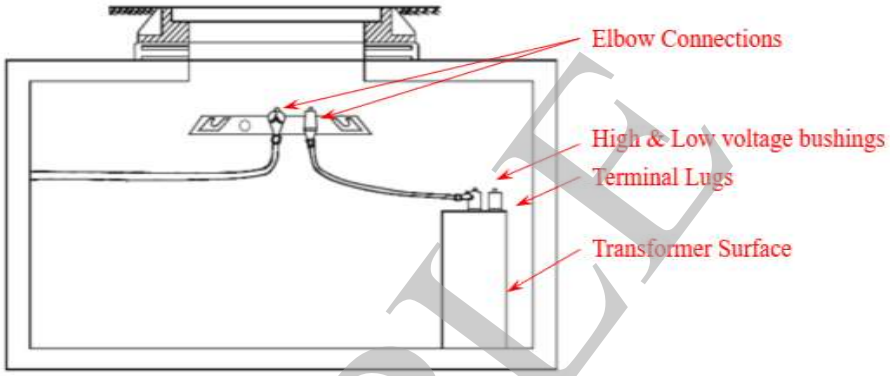

EQUIPMENT:	**E1**
Use IR Camera to Scan & Capture Temperature:	
What did you Scan? (explain)	E1: Temperature / E1: Reference Temperature

EQUIPMENT:	**E2**
Use IR Camera to Scan & Capture Temperature:	
What did you Scan? (explain)	E1: Temperature / E1: Reference Temperature

EQUIPMENT:	**E3**
Use IR Camera to Scan & Capture Temperature:	
What did you Scan? (explain)	E1: Temperature / E1: Reference Temperature

EQUIPMENT:	**E4**
Use IR Camera to Scan & Capture Temperature:	
What did you Scan? (explain)	E1: Temperature / E1: Reference Temperature

EXAMPLE

OTHER EQUIPMENT: **EXTRA**

Use IR Camera to Scan & Capture Temperature: (circle one)

O Elbow Connector	O Termination/Riser	O Premolded Joint/Disconnectable	O Misc.

REPORT ANY ABNORMAL CONDITIONS:

EXAMPLE

EVERSOURCE	WORK METHOD STANDARD ELECTRIC OPERATIONS ORGANIZATION

Vault Inspections

Document Number:	Issued Date:	Revised Date:	Revision:	Applicability:
WMS 86.03-234	15-Aug-23	---	0	CT/WMA/NH

*****This Document Supersedes EMP 6.59A & EMP 6.59C.*****

Scope:

This document details the minimum acceptable inspection and maintenance methods to be performed in network building and subsurface vaults.

Safety:

Providing a work environment, free of recognized hazards is a value at Eversource. Therefore, prior to the start of any work, ensure that you are familiar and knowledgeable with all Eversource Safety Rules, Policies and Procedures that are applicable to the work and tasks at hand and perform a job brief at the job site, prior to commencing work. PPE requirements to protect the worker shall be followed as required in the Eversource Employee Safety Manual.

Rev No.	Description	Date
0	Original Document	August 15, 2023

EVERSOURCE	WORK METHOD STANDARD ELECTRIC OPERATIONS ORGANIZATION

Vault Inspections

Document Number:	Issued Date:	Revised Date:	Revision:	Applicability:
WMS 86.03-234	15-Aug-23	---	0	CT/WMA/NH

Approved by: *Signature on File* Date: 10-Jul-23
Christopher A Menard
Director, Electric Operation

Approved by: *Signature on File* Date: 10-Jul-23
Clifford G Williams
Director, Electric Operation

Approved by: *Signature on File* Date: 15-Aug-23
Anthony A Anzalone
Director, Electric Operation

Approved by: *Signature on File* Date: 13-Aupr-23
Jason M Yergeau
Director, Electric Operation

Approved by: *Signature on File* Date: 09-Aug-23
Jonathan B Duffy
Director, Safety

Approved by: *Signature on File* Date: 11-Aug-23
Jennifer J Hebsch
Director, T&D Standards Engineering

Table of Contents

Section		Page
1.0	Introduction	4
2.0	Reference Documents	4
3.0	Definitions	4
4.0	General	5
5.0	Pre-Entry Inspection and Setup	6
6.0	Planned Entry for Scheduled Work Inspection	7
7.0	Preventative Maintenance Inspection	8
8.0	Structural Integrity Inspection	11
9.0	Exiting Inspection and Completion	11
10.0	Follow-Up Preventative Maintenance	12

Appendix A – Vault Inspection Form Example 13
Appendix B – CTDOT Structural Vault Inspection Letter 15

1.0 Introduction

1.1 Network building and subsurface vault inspections help ensure the structural and the electrical integrity of Eversource's network system.

1.1.1 Inspection results are used to proactively repair and/or upgrade the system.

1.2 Work in vaults that contain network transformers and equipment may include the following tasks:

1.2.1 Installing or removing transformer links and network fuses

1.2.2 Rolling or racking out the protector

1.2.3 Phasing protectors

2.0 Reference Documents

ESOP 100	Switching and Tagging
EMP 5.59	Underground Vaults and Manholes
OP-5142	Vault Inspection Form
WMS 81.13-234	Underground Thermography of Cables & Cable Accessories in Manholes & Vaults
TD 955	Confined Space Requirements
WMS 82.01-234	Manhole Inspections & Upgrades
WMS 88.11-234	Substation Work Area Identification
WMS 90.01-3	Method for Checking Stray Voltage Sources
WMS 90.18-234	Substation Transformer Insulating Fluid Sampling and Testing

3.0 Definitions

3.1 Manhole – A subsurface enclosed space with an entry cover that personnel may enter and that is used for installing, operating, and maintaining submersible equipment or UG cable.

3.2 Planned Entry – Any entry being made to a vault or manhole for the purpose of performing scheduled maintenance on any piece of equipment located within the vault or manhole. This includes, but is not limited to, routine maintenance, cable installation, and/or cable splicing.

3.3 Preventative Maintenance – Any entry being made to a vault or manhole to perform Major Distribution Level Inspection or Major Transmission Level Inspection as specified in **EMP 5.59**.

3.4 Vault – An enclosed space with a door or hatch along with a second escape hatch, above or below ground, that personnel may enter and that is used for installing, operating, or maintaining equipment or cable.

4.0 General

4.1 Inspection forms (digital or paper) shall be completed when performing inspections.

4.1.1 All the form information MUST be completed for the inspection to be complete.

4.2 It is recommended to review previous maintenance record prior to accessing or working in the vault to identify major deficiencies and/or maintenance completed.

4.3 Minor repairs may be completed immediately. Repairs requiring more extensive work are noted on inspection form.

4.3.1 Follow-up preventative and corrective maintenance shall be scheduled for a later date.

4.4 The deficiencies described below, require the primary circuit to be de-energized:

4.4.1 "Below Low" insulating fluid level in the primary switch or transformer (as shown in **WMS 90.18-234**) or dielectric quality of insulating fluid below acceptable level.

4.4.2 Any other significant defect or abnormal condition that may affect the safe operation of the network protector or transformer, such as:

.2.1. Excessive damage / corrosion in the network protector.

.2.2. Other defects that require immediate repair to return to service.

Space Intentionally Left Blank

5.0 Pre-Entry Inspection and Setup

5.1 The Safety and Pre-Entry inspection shall be completed regardless of reason of the entry.

CAUTION: If dangerous or hazardous conditions are or become present, as define in **TD 955,** immediately notify your Supervisor and the System Control Center.

5.2 For sub-surface vaults, complete all entry and rescue requirements as stated in **TD 955**.

5.3 Indicate if known or suspected asbestos-containing materials are present in the vault.

5.3.1 If known or suspected asbestos-containing materials (ACM) are present and will be impacted by work in the vault; contact the Sustainability & Environmental Affairs Department Asbestos Program Coordinator or an approved Asbestos Abatement Contractor to abate the material(s).

NOTE: All known or suspected ACM must be disturbed only by a licensed asbestos abatement contractor.

5.3.2 For planned work, the Sustainability & Environmental Affairs Department Asbestos Program Coordinator can provide sampling services to determine whether suspect materials contain asbestos.

5.3.3 If asbestos-containing material (ACM) is in good condition and will not be impacted by work, it can remain in place

5.4 Prior to entering vault, test the vault door, frame, and/or hatch for stray voltage using a voltage sensor, refer to **WMS 90.01-3**.

5.4.1 Record the measured voltage, even if it is zero, on the Vault Inspection Form.

5.4.2 If voltage is detected, contact your Supervisor or the System Control Center immediately for corrective action.

5.5 Inspect and document the following on the Vault Inspection form, **OP#5142:**

5.5.1 Doors/Hatches – check for damage, signs of forced entry, vandalism.

.1.1. Verify that they can be opened properly and secured in the open position.

.1.2. Verify properly grounded.

5.5.2 Slabs/Door Casements – check for damage/vandalism.

.2.1. Verify that the ground is in satisfactory condition.

5.5.3 Ladders – Where applicable, check for structural integrity & satisfactory condition.

.3.1. Verify all ladders are set up properly and grounded to system

5.5.4 Moisture/Liquid – check from outside the vault and indicate if pumping is required.

5.5.5 Hazardous debris – check for trash, hypodermic needles, etc.

6.0 Planned Entry for Scheduled Work Inspection

6.1 This inspection shall be completed whenever entering a vault to perform scheduled maintenance on equipment located within the vault.

6.2 Record the required information on the Vault Inspection form, **OP#5142**.

6.3 Complete the Pre-Entry Inspection and Setup section of this standard.

6.4 If necessary, complete an infrared (IR) thermography inspection per **WMS 81.13-234**.

6.5 Transformers – If present, inspect and document all of the following information for each unit on **OP#5142**:

6.5.1 Observed temperature – measured from the temperature gauge

6.5.2 Max temperature – measured from the temperature gauge. This will be the maximum temperature observed since the transformer was previously checked.

.2.1. Reset the gauge once max temperature is recorded.

6.5.3 Main Tank Fluid Level.

.3.1. Verify the insulating fluid (oil) is at an acceptable level.

.3.2. View the fluid level through the sight glasses or by confirming the oil gauge does NOT indicate low oil, refer to **WMS 90.18-234**.

.3.3. Verify the main tank fluid level gauge reads approximately 25 deg C.

6.5.4 Primary Switch

.4.1. Verify the insulating fluid (oil) is at an acceptable level.

.4.2. View the fluid level through the sight glasses or by confirming the oil gauge does NOT indicate low oil, refer to **WMS 90.18-234**.

.4.3. Indicate the position of the three (3) position switch, if applicable.

NOTE: If any transformer's and/or primary switch's insulating fluid is below low, DO NOT operate the protector. Contact your Supervisor for further instructions.

6.5.5 Overall condition of the Transformer(s)

.5.1. Ground is present and in good condition

.5.2. Damage, vandalism, and defects

.5.3. Overloaded conditions

6.5.6 Interlock Position – The interlock should be in the locked position, for energized transformers.

.6.1. Verify the lock free indicator is indicating "Locked".

6.6 Verify all lighting in the vault is in good working order.

6.7 Perform Structural Integrity Inspection section of this standard.

6.8 Perform Exiting Inspection and Completion section of this standard.

7.0 Preventative Maintenance Inspection

7.1 This inspection and associated form shall be completed per schedule requirements outlined in **EMP 5.59**.

7.2 Record all results digitally through form software or on the Vault Inspection form, **OP#5142**.

7.2.1 Additional repair work shall be noted on the digital or hardcopy Vault Inspection Form.

.1.1. Digital forms will automatically update Maximo record data and open additional work orders if necessary.

.1.2. Hardcopy forms require manual entry.

7.3 Complete the Pre-Entry Inspection and Setup section of this standard.

7.4 If necessary, complete the infrared thermography inspection per **WMS 81.13-234**.

7.5 Transformer – If present, inspect all transformers in the vault for the following:

7.5.1 Observed temperature – measured from the temperature gauge

7.5.2 Max temperature – measured from the temperature gauge. This will be the maximum temperature observed since the transformer was previously checked.

.2.1. Reset the gauge once max temperature is recorded.

7.5.3 Main Tank Fluid Level.

.3.1. Verify the insulating fluid (oil) is at an acceptable level.

.3.2. View the fluid level through the sight glasses or by confirming the oil gauge does NOT indicate low oil, refer to **WMS 90.18-234**.

.3.3. Verify the main tank fluid level gauge reads approximately 25 degrees C.

7.5.4 Primary Switch

.4.1. Verify the insulating fluid (oil) is at an acceptable level.

.4.2. View the fluid level through the sight glasses or by confirming the oil gauge does NOT indicate low oil, refer to **WMS 90.18-234**.

.4.3. Indicate the position of the three (3) position switch, if applicable.

NOTE: If any transformer's and/or primary switch's insulating fluid is below low, DO NOT operate the protector. Contact your Supervisor for further instructions.

7.5.5 Overall condition of the Transformer(s)

.5.1. Ground is present and in good condition

.5.2. Damage, vandalism, and defects

.5.3. Overloaded conditions

7.5.6 Interlock Position – The interlock should be in the locked position, for energized transformers.

.6.1. Verify the lock free indicator is indicating "Locked".

7.6 Protectors – Inspect the following aspects of all protectors contained within the vault:

7.6.1 Protector Case – Inspect the protector case verify it is in good condition.

7.6.2 Fuse(s) – When possible, inspect the fuse to verify it is in satisfactory condition.

7.6.3 Counter Reading – Record the protector counter reading.

7.6.4 Position Indicator – Open / Closed

7.6.5 Position of Protector Handle – Indicate the position of the protector handle.

7.7 Inspect the following:

7.7.1 Limiters – If replacement is needed indicate limiter size.

.1.1. Use clamp-on ammeter to verify current in each phase of each conductor.

7.7.2 Fault Indicators (if applicable) – Check condition, clean, and replace if necessary.

7.7.3 Equipment Status Indicators – Check condition, clean, and replace if necessary

7.7.4 Unistrut/Hangers – Inspect for damage and rust. Check to see if they are pulling away from vault walls.

.4.1. Visually inspect plastic inserts to ensure cables are properly supported. If broken plastic inserts are found, record the location(s) on the inspection form and replace if necessary.

7.7.5 Duct (Conduit) – Verify all ducts that enter vaults and contain cables have duct shields/fairleaders and are sealed.

.5.1. Missing fairleaders/unsealed ducts shall have their locations documented on the inspection form.

7.7.6 Arc proofing – Required for the entire length of distribution cable contained within the vault (not used on asbestos insulated or low voltage cables). Install or replace, where required.

7.7.7 Primary and Secondary Cables – Inspect all cables contained within the vault for signs of damage, including but not limited to:

.7.1. Missing or melted insulation

.7.2. Burn marks

.7.3. Insulation swelling

.7.4. Exterior lead sheath cracking on or around cable bends

.7.5. Damage to pipe surface coating

.7.6. Grounding/bonding

.7.7. All cable(s) are properly labeled.

.7.8. List all issues in the comment section.

7.7.8 Primary and Secondary Joints – Inspect primary joints in vault for obvious signs of damage including, but not limited to:

.8.1. Missing insulation

.8.2. Melted insulation

.8.3. Burn marks

.8.4. Insulation swelling

.8.5. Arc proofing, duct to duct

.8.6. Leaking high voltage compound

.8.7. Leaking cable insulation oil

.8.8. Cracked wipes

.8.9. Abnormalities in sleeve shape

.8.10. Holes in lead sleeve

.8.11. Improperly attached bond wire to lead sleeve

.8.12. List all issues in the comment section.

7.7.9 Secondary Bus – Record the type of secondary bus and its condition.

7.7.10 Grounding – Verify all other equipment within the vault is properly grounded.

7.7.11 Ground Bus – Inspect the ground bus for obvious signs of damage and corrosion.

7.7.12 Fiberoptic Cable – Visually inspect cable for signs of damage and confirm that it is racked and secure.

.12.1. If damaged fiber optic cables are found, contact the System Desk Supervisor.

7.7.13 Switches – Inspect for oil leaks, defects, and/or overloaded condition

7.7.14 Sumps & Drains – If present, check to ensure the following:

.14.1. Signs of excessive water entering the facility are noted and that the presence of any water sheen, unusual odor, water discoloration, or any significant sludge buildup is noted

.14.2. Drains are not blocked

.14.3. Drains have a functional trap

.14.4. Gravity sumps are clean

.14.5. Sump pumps, if present, are working and installed properly

.14.6. Proper operation of installed the oil-water separator if present

NOTE: If dielectric fluid/oil is identified, contact your supervisor, and refer to applicable work procedures related to any required water management prior to entry. Should the oil be a release from electrical equipment (including cables), notify SOC/Dispatch who will notify the on call environmental coordinator to coordinate any required additional assessment and cleanup actions.

7.7.15 Lighting – Verify all lighting is in good working order.

7.7.16 Convenience Outlet – Check the convenience outlet for damage and verify it is working.

7.7.17 Vent Fans – If applicable, verify the vent fans are working properly.

7.8 Perform Structural Integrity Inspection section of this standard.

7.9 Perform Exiting Inspection and Completion section of this standard.

8.0 Structural Integrity Inspection

8.1 Record the structural integrity inspection details in Maximo or on the Vault Inspection Form, **OP#5142**.

8.2 Inspect the walls and ceiling; frames and covers for any signs of:

8.2.1 Excessive cracking or flaking concrete

8.2.2 Exposed or corroded reinforcing steel

8.2.3 Severely rusted I-beams

8.2.4 Severely pitted or rusty structural components, etc.

8.2.5 Signs of bowing out

8.2.6 Corrosion and spalling on horizontal and vertical concrete beams

8.2.7 Fatigue on the bottom steel beam flanges

8.3 Inspect Beam Pockets to ensure:

8.3.1 Sufficient bearing surface

8.3.2 Beams lay flat in the pocket, with no torsion

8.3.3 Shims, concrete, and bearing surfaces are in good condition

8.3.4 Beams have proper embedment into the pocket

8.4 Inspect the vault for excessive mid-span deflection of:

8.4.1 Walls

8.4.2 Floors

8.4.3 Lids

8.4.4 Supports

8.5 Check pulling eyes for corrosion and condition of hardware.

9.0 Exiting Inspection and Completion

9.1 Upon the completion of work:

9.1.1 The working space shall be left clean and free of all debris (e.g., trash, excess cable, platforms, cable insulation, etc.).

9.1.2 Securely fasten all entry covers and/or doors.

9.2 If there are communication lines within vault that are creating a hazard, verify Eversource Communications team has been alerted to contact responsible party.

9.3 After exiting the vault, test the door and casting for stray voltage.

9.4 If a hardcopy form is used, forward the completed Vault Inspection Form to the Supervisor for review and Maximo entry.

NOTE: Manholes listed in the CTDOT Structural Vault Inspection Letter shall be conducted hammer testing.

10.0 Follow-Up Preventative Maintenance

10.1 When the digital form is deemed completed, the form is automatically saved within the form software program.

10.1.1 When the digital form indicates findings/issues of inspection items, follow-up work requests will automatically generate in Maximo.

.1.1. The Supervisor shall review the work requests and decide to approve or cancel.

.1.1a. Approved Work Requests will automatically create a new follow-up Work Order.

.1.1b. Canceled Work Requests will remove it from queue and no further action required.

10.1.2 When the digital form indicates no findings/issues, then the form is automatically uploaded and saved to Maximo.

.2.1. No further action required.

10.1.3 Based on structural integrity classification, follow-up work from civil or structural engineer may be required.

10.2 When the hard copy form is deemed completed, the Supervisor shall review the inspection form and recommended preventative maintenance action items documented on the inspection form.

10.2.1 The Supervisor shall sign the form and deliver to the Maximo Administrators to update in system.

10.2.2 Maximo Administrators, if needed, will create follow-up work orders.

10.3 Based on structural integrity classification, follow-up work from civil or structural engineer may be required.

Space Intentionally Left Blank

Appendix A – Vault Inspection Form Example

EVERSOURCE

DISTRIBUTION OR NETWORK VAULT INSPECTION

Vault #:_____
Region: CT EMA WMA NH

Reviewed By:		ID #	Date:
Signature		Follow-up Work Required?	◯ Yes ◯ No

Inspection W.O. #	Task	Project	Description

***Prior to the start of the inspection, review the details defined in Work Method Standard WMS 86.03.*

General Information:

Station # _____ Start Date/Time: _____
Inspected By: _____ End Date/Time: _____
Employee ID#: _____ Cross Street: _____
Address: _____ City/Town: _____

Pre-Entry Items marked with an asterisk (*) are to be inspected whenever entering a manhole.

	Inspection	Circle One	
*1	Stray / Contact Voltage Present?	Yes	No
*2	Is gas present in Vault? (Test per WMS 88.02)	Yes	No
3	Is known or suspected asbestos present in vault?	Yes	No
*4	Condition of Door/hatch frame satisfactory?	Yes	No
*5	Condition of Vault door/hatch satisfactory?	Yes	No
*5a	Door/ladder properly grounded?	Yes	No
*6	Condition of ladder satisfactory?	Yes	No
*6a	Is Pumping Required?	Yes	No
*6b	Is Dielectric Fluid/Oil Present in the Vault? *If Yes, list how the fluid is to be abated in the comments. Follow instructions in Sec 5.8.1 of WMS 86.03*	Yes	No
7	Infrared Inspection per WMS 81.13 satisfactory?	Yes	No

When an abnormal condition is found detail the condition in the comment section; include the line item and the reason.

8 Transformer The following items are inspected per Network Transformer

	Feeder:		Feeder:		Feeder:		Feeder:	
Observed Temp								
Max Temp								
Main Tank Oil Level Satisfactory	Yes	No	Yes	No	Yes	No	Yes	No
Overall Condition Satisfactory	Yes	No	Yes	No	Yes	No	Yes	No
Liquid Level Gauges	Yes	No	Yes	No	Yes	No	Yes	No
3 Pos Switch (Open, XFMR, or Gnd)								
Interlock Position	Free	Lock	Free	Lock	Free	Lock	Free	Lock

FORM # OP-#### Page 1/2 Rev 08-Mar-23

EXAMPLE

EVERSOURCE

DISTRIBUTION OR NETWORK VAULT INSPECTION

Vault #:_____
Region: CT EMA WMA NH

9 Protector The following items are inspected per Network Protector

		Feeder:		Feeder:		Feeder:		Feeder:	
Case Condition Satisfactory		Yes	No	Yes	No	Yes	No	Yes	No
Fuse Condition Satisfactory (when possible)	N/A	Yes	No	Yes	No	Yes	No	Yes	No
Counter Reading									
Position Indicator		Open	Closed	Open	Closed	Open	Closed	Open	Closed
Handle Position (Open, Closed Auto)									

	Inspection Items	Work Completed Quantity	Satisfactory	Onsite Repairs Completed	Un-satisfactory	Not Applicable
14	Limiters		S	R	U	N/A
15	Fault Indicators		S	R	U	N/A
16	Equipmen Status Indicators		S	R	U	N/A
17	Unistrut/Hangers		S	R	U	N/A
18	Ducts/Conduit		S	R	U	N/A
19	Arc Proofing		S	R	U	N/A
20	Primary Cables, Joints		S	R	U	N/A
21	Secondary Cables, Joints, Bus		S	R	U	N/A
22	Grounding Wires and Bus		S	R	U	N/A
23	Fiberoptic Cable		S	R	U	N/A
24	Switches		S	R	U	N/A
25	Sumps & Drains		S	R	U	N/A
*26	Lighting		S	R	U	N/A
27	Convenience Outlet		S	R	U	N/A
28	Ventilation Fans		S	R	U	N/A
29	Secondary Sheath Voltage Testing		S	R	U	N/A
30	Structural Integrity Inspection		S	R	U	N/A

When an abnormal conditions is found detail the condition in the comment section; include the line item and the reason.

Exiting

*31	Vault Left Clean?	Yes	No
*32	Vault Door/Hatch Secured?	Yes	No
*33	Follow up work required?	Yes	No

List Issues Found, Repairs Made or Any Additional Comments

FORM # OP-#### Page 2/2 Rev 08-Mar-23

EXAMPLE

Appendix B – CTDOT Structural Vault Inspection Letter

Connecticut
Light & Power
The Northeast Utilities System

The Connecticut Light and Power Company
P.O. Box 270
Hartford, CT 06141-0270
(860) 947-2000
www.cl-pcom

March 31, 2010

Mr. Thomas A. Harley, Chief Engineer
Connecticut Department of Transportation
Bureau of Engineering and Highway Operations
2800 Berlin Turnpike
Newington, CT 06131-7546

RE: Splice Vault Structural Integrity Inspection Program for the Existing 345/115 kV Transmission Vaults Under Dockets 217, 272, and 292

Dear Mr. Harley:

Attached is the Splice Vault Structural Integrity Inspection Program that we sent to the Department on December 16, 2008, revised to address the design load rating of the splice vaults for the Bethel-Norwalk project (Docket 217). This project was designed prior to the Department initiating the Design Operating Vehicle load requirement, therefore the splice vaults were designed to accommodate the AASHTO HS-20 design vehicle.

Regards,

Anne Bartosewicz
Project Director

c: Joseph Obara – ConnDOT
Sohrab Afrazi – ConnDOT

SPLICE VAULT STRUCTURAL INTEGRITY INSPECTION PROGRAM FOR NORTHEAST UTILITIES VAULTS LOCATED WITHIN ConnDOT ROADWAYS for the MIDDLETOWN-NORWALK 345-KV PROJECT, GLENBROOK CABLES 115-KV PROJECT, and BETHEL-NORWALK 345-KV PROJECT

For splice vaults for the Middletown-Norwalk (MN) and Glenbrook Cables (GC) projects located within ConnDOT roadways, the design and inspection program is to comply with the requirements outlined in the ConnDOT letter dated November 1, 2005 from Art Gruhn, ConnDOT Bureau Chief, to Anne Bartosewicz, NU's Project Director. In summary, the splice vault design for the MN and GC projects shall at minimum accommodate the AASHTO HS-20 design vehicle, and shall be checked for ConnDOT's Design Operating Vehicle, which is a 204 kip, 8-axle vehicle. The Design Operating Vehicle is the critical loading condition and additionally it satisfies the AASHTO HS-25 design vehicle loading condition. The splice vaults for the Bethel-Norwalk (BN) project were designed at a minimum to accommodate the AASHTO HS-20 design vehicle. ConnDOT instituted the Design Operating Vehicle requirement after the BN project was designed and therefore it was not considered in the BN vault design. The inspection requirements include the preparation of inspection reports by a Connecticut licensed professional engineer, and submission of the reports to ConnDOT, all in accordance with ConnDOT's Bridge Inspection Manual (in particular, the Culvert section of the Manual). These inspection requirements are addressed in the following section and apply to the vaults identified in Exhibit A attached hereto, which also includes the vaults installed within the paved roadway of a State highway for the BN project.

INSPECTION FOR STRUCTURAL INTEGRITY

The splice vault inspection for structural integrity will be conducted at an interval no greater than 5 years, with an increased frequency should a defect be identified, and the report shall be signed and sealed by a Connecticut licensed professional engineer. Such an inspection cycle will provide a continuous condition evaluation record of the vault. Should defects be discovered that present a hazard to the safe passage across the vault, ConnDOT is to be immediately notified and appropriate follow-up actions are to be taken. As part of the inspection program, the load rating (live load carrying capacity) is to be computed using the Load Factor Method and updated incorporating the effects of any structural deficiencies. Future ConnDOT requirements may change the load rating computation method to the Load and Resistance Factor Rating method.

The components of the vault are to be evaluated for their current physical state and rated in accordance with the Condition Rating Coding System in ConnDOT's Bridge Inspection Manual. The visual inspection may find signs of distress, distortions, latent defects, loss of section, or deterioration. All exposed surfaces of concrete should be tapped with a hammer to locate delaminations or other deficiencies. Special attention must be given to not damage the electric cables and equipment in the vaults during the hammer testing.

All observed deficiencies and deteriorations should be documented with the dimensions of the length, width, height, depth of loss, orientation and location relative to a fixed, easily identifiable point. Particular care shall be given to documenting any increase in quantity or size of deterioration which have changed since the last inspection.

Photographs shall be taken of all components of the vault and detailed photographs shall be taken of all deficient areas.

In some instances of deterioration additional non-destructive testing may be required to correctly determine the extent of the deficiency. A vault with known deficiencies and/or questionable conditions may require more frequent inspections.

To record the findings of each inspection, a prepared set of drawings will be provided to the inspecting engineer for delineating any and all deficiencies. These drawings will become part of the inspection report. The structural integrity inspection may occur concurrently with the utilities' periodic inspection of their electric facilities.

EXHIBIT A

LIST OF VAULTS IN CONNDOT ROADWAYS SUBJECT TO STRUCTURAL INTEGRITY INSPECTION PROGRAM

MIDDLETOWN-NORWALK PROJECT (CSC Docket # 272)

25 Vaults

Vault #s	Location	Municipality
4901, 5801	Housatonic River boat ramp near I-95	Milford
6407, 7507	159 Westport Avenue (US 1)	Norwalk
6416, 7516	245 Post Road East (US 1)	Westport
6421, 7521	1050 Post Road East (US 1)	Westport
6422, 7522	1200 Post Road East (US 1)	Westport
6431, 7531	2269 Post Road (US 1)	Fairfield
6432, 7532	1949 Post Road (US 1)	Fairfield
6433, 7533	1643 Post Road (US 1)	Fairfield
6435, 7535	1055 Post Road (US 1)	Fairfield
6438, 7538	122 Post Road (RTE 130)	Fairfield
6440, 7540	Fairfield Avenue (RTE 130) & Gilman Street	Bridgeport
6441	2704 Fairfield Avenue (RTE 130)	Bridgeport
6443, 7543	2098 Fairfield Avenue (RTE 130)	Bridgeport

GLENBROOK PROJECT (CSC Docket # 292)

29 Vaults

Vault #s	Location	Municipality
4000, 6200	MNRR Property on Hamilton Avenue	Stamford
4004, 5004, 6204	Darien Service Area	Darien
4005, 5005, 6205	Darien Service Area	Darien
4007, 5007, 6207	MNRR Noroton Heights Parking Lot	Darien
4013, 5013, 6213	MNRR Mechanics Street Parking Lot	Darien
4015, 5015, 6215	455 Post Road (US 1)	Darien
4017, 5017, 6217	54 Post Road (US 1)	Darien
4022, 5022, 6222	247 Post Road (US 1)	Norwalk
4023, 5023, 6223	147 Post Road (US 1)	Norwalk
4027, 5027, 6227	29 Van Buren Avenue (US 1)	Norwalk

EXHIBIT A

LIST OF VAULTS IN CONNDOT ROADWAYS SUBJECT TO STRUCTURAL INTEGRITY INSPECTION PROGRAM

BETHEL-NORWALK PROJECT (CSC Docket # 217)

26 Vaults

Vault #	Location	Municipality
2511	Putnam Park Road (RTE 58) 1820' south of Dodgington Road (RTE 302)	Bethel
2512	Putnam Park Road (RTE 58) 1860' south of Dodgington Road (RTE 302)	Bethel
2519	Redding Road (RTE 107) 540' south of Peaceable Street	Redding
2520	Redding Road (RTE 107) 820' north of Meadow Ridge	Redding
2523	RTE 7 3460' south of RTE 107	Redding
2301	RTE 7 680' south of Wilton Acres	Wilton
2302	RTE 7 290' south of Hollyhock Lane	Wilton
2303	RTE 7 830' south of Kensett Avenue	Wilton
2304	RTE 7 410' south of Heathcote Road	Norwalk
2305	RTE 7 (Main Avenue) north of Grist Mill Road	Norwalk
2306	RTE 7 (Main Avenue) 600' north of Valley View Road	Norwalk
2307	RTE 7 (Main Avenue) 810' north of O'Donnell Road	Norwalk
2308	RTE 7 (Main Avenue) at Merritt Parkway (east) exit ramp	Norwalk
2309	RTE 7 (Main Avenue) 200' north of Linden Street	Norwalk
2310	RTE 7 (Main Avenue) 350' north of Broad Street	Norwalk
2002	Putnam Park Road (RTE 58) 1100' south of Hoyts Hill Road	Bethel
2003	Putnam Park Road (RTE 58) 2820' south of Hoyts Hill Road	Bethel
2004	Putnam Park Road (RTE 58) 420' north of Sunset Hill Road	Bethel
2005	Putnam Park Road (RTE 58) 3000' south of Sunset Hill Road	Bethel
2006	Putnam Park Road (RTE 58) 4650' south of Sunset Hill Road	Bethel
2007	Putnam Park Road (RTE 58) 1600' north of Putnam Park entrance	Redding
2009	RTE 107 1730' south of Putnam Park entrance	Redding
2010	RTE 107 700' south of Musket Lane	Redding
2011	RTE 107 1000' south of Lonetown Road	Redding
2012	RTE 107 at John Reed Road	Redding
2013	RTE 107 1970' south of John Reed Road	Redding

APPENDIX 18

APPENDIX NO LONGER USED

APPENDIX 19

INFRARED SURVEY PROGRAM

Scope:

This document details the maintenance of Infrared Inspection.

Safety:

Providing a work environment, free of recognized hazards is a value at Eversource. Therefore, prior to the start of any work, ensure that you are familiar and knowledgeable with all Eversource Safety Rules, Policies and Procedures that are applicable to the work and tasks at hand and perform a job brief at the job site, prior to commencing work. PPE requirements to protect the worker shall be followed as required in the Eversource Employee Safety Manual.

Connecticut

Approved by: *Signature on File* Date: 29-Jun-23
Kevin Harris
Director, Field Engineering /Communications

Approved by: *Signature on File* Date: 28-Jun-23
Wayne Gagnon
Director, Station Operations

Approved by: *Signature on File* Date: 05-Jul-23
Barry Lashley
Director, Electric Operations

Approved by: *Signature on File* Date: 03-Jul-23
Christopher Menard
Director, Electric Operations

Approved by: *Signature on File* Date: 05-Jul-23
Clifford Williams
Director, Electric Field Operations

Approved by: *Signature on File* Date: 28-Jun-23
Jeffrey Richard
Director, Distribution Engineering

Massachusetts

Approved by: *Signature on File* Date: 05-Jul-23
Umair Zia
Director, Distribution Engineering

Approved by: *Signature on File* Date: 03-Jul-23
Robert O'Loughlin
Director, Electric Operations

Approved by: *Signature on File* Date: 28-Jun-23
Anthony Anzalone
Director, Station Operations

Approved by: *Signature on File* Date: 06-Jul-23
Guerlemps Jean
Director, Field Engineering /Communications

Approved by: *Signature on File* Date: 28-Jun-23
Mark Baldwin
Director, Electric Field Operations, Boston

Approved by: *Signature on File* Date: 29-Jun-23
Daryle Brown
Director, Electric Field Operations, Central

Approved by: *Signature on File* Date: 06-Jul-23
Kevin Saulnier
Director, Electric Field Operations, South

Approved by: *Signature on File* Date: 30-Jun-23
David Velez
Director, Electric Field Operations, West

New Hampshire

Approved by: *Signature on File* Date: 28-Jun-23
Jason Yergeau
Director, Electric Operations

Approved by: *Signature on File* Date: 28-Jun-23
Eric Sutton
Director, Station Operations

Approved by: *Signature on File* Date: 28-Jun-23
Russel Johnson
Director, Distribution Engineering

Tri-State

Approved by: *Signature on File* Date: 28-Jun-23
Jennifer Hebsch
Director, T&D Standards Engineering

Approved by: *Signature on File* Date: 01-Aug-23
Fatou Dieng
Director, Asset Management

Approved by: *Signature on File* Date: 03-Jul-23
Demetrios Sakellaris
Director, Substation Technical Engineering

Rev No.	Description	Date
6	1. Added reference to NFPA 70B. 2. Under References, removed ED 3017 and EMP 6.22. 3. Added Note 3 to Table 1 – Infrared Survey Intervals. 4. Added Table 2 – Infrared Survey Interval Exceptions to re-align all EMP documents with this document. 5. Updated the list of equipment in Section 4 – Facilities and Equipment. 6. Changed names of the Approvers on the Signature page, as required.	August 1, 2023
5	1. Changed names of the Owner, SME, and Approvers on the Signature page, as required. 2. Incorporated the following global replacements: • NU Maintenance Manual replace by Eversource Maintenance Program • CL&P replaced by Eversource Connecticut • WMECO replaced by Eversource Western Massachusetts • PSNH replaced by Eversource New Hampshire • NSTAR replaced by Eversource Eastern Massachusetts • NUMM replaced by EMP 3. Revised procedure as necessary to change Infrared Survey – Distribution 4. Substation to Infrared Survey – Substation to account for transmission. 5. Revised procedure as necessary to add Infrared Survey – Transmission Overhead Lines. 6. Added reference to Eversource Employee Safety Manual.	Jule 1, 2015
4	1. Changed approver names on the Signature page, as required.	October 1, 2014
3	1. Changed approver names on the Signature page, as required. 2. Added Note 2 to Table 1 – Infrared Survey Intervals to clarify that Infrared inspections of three phase OH backbone on right-of ways are NOT performed unless other conditions identified during the routine visual inspection warrant further investigation.	October 17, 2013
2	1. Added that TD 853 has been endorsed by all three operating companies. 2. Changed approver names on the Signature page, as required.	October 5, 2011
1	1. Under Routine Inspection, made reference to TD 853 in Step 2 in order to analyze the findings of the surveys, prioritize the actions to be taken, and distribute reports. 2. Under Routine Inspection, removed table for classifying IR findings. 3. Under Routine Inspection, removed previous Step 3 for recording and reporting findings.	March 17, 2010
0	1. Original Document	---

1.0 Introduction 7
2.0 Reference Documents.....7
3.0 Definitions 7
4.0 Facilities/Equipment 8
5.0 Inspection and Maintenance Activity Schedules 9
6.0 Maintenance Categories 9
7.0 Infrared Inspection Maintenance Basis Documentation 10

1.0 Introduction

1.1 The Infrared (IR) Survey Program utilizes technology known as Thermography to identify degraded components. Thermography is a non-destructive test method that remotely measures heat emitted from a component, allowing a temperature comparison between the component, and adjacent or contiguous materials. A significant rise in temperature on a specific component referred to as a “hot spot” or “finding,” indicates that the component is in a degraded condition. The magnitude of the temperature rise is in part proportional to the relative resistance of the device and is an indicator of the severity of the degradation.

1.2 In classifying the severity of a finding, the Thermographer must also consider a variety of factors that influence the measured temperature. The emissivity and reflectivity attributes of the material of the item being scanned impact the readings obtained by the thermal imaging equipment. Whenever possible, comparisons should be made between components made of like material. The relative load on the circuit must be considered since higher load will result in a higher temperature rise. In addition to the above, environmental conditions (e.g., direct sunlight, overcast, precipitation, ambient temperature, wind speed, etc.) must also be considered, as they relate to cooling being provided to the component.

1.3 The type of component is a factor in determining appropriate corrective actions. Passive, air-cooled components, such as hot-line clamps or splices, can typically tolerate higher temperatures before failure becomes imminent and are generally allowed more latitude in terms of response/repair time. Oil filled or active devices, such as Capacitors, Reclosers, and oil filled bushings cannot tolerate very high temperatures; corrective action must be taken at relatively low magnitudes of temperature rise for these components.

2.0 Reference Documents

EMP 5.78	Transmission Overhead
TD 853	Infrared Thermographic Inspections
WMS 60.10-1	Substation Transformer Thermography
WMS 60.10-234	Substation Transformer Thermography
ASTM E 1934-99a	Standard Guide for Examining Electrical and Mechanical Equipment with Infrared Thermography (2018)
NFPA 70B	Standard for Electrical Equipment Maintenance

3.0 Definitions

3.1 The abbreviations used for the intervals are:

3.1.1 Y = Year, i.e. 2Y = 2 Years

3.1.2 M = Month

3.1.3 A/R = As Required

4.0 Facilities/Equipment

4.1 An Infrared Survey is performed on all Distribution three-phase overhead backbone circuitry, Distribution substation equipment, and other equipment deemed necessary.

4.1.1 Three-Phase overhead circuitry for distribution backbone and transmission circuitry, which includes:

- Capacitors (Pole-top)
- Lightning Arrestors
- Potential Transformers
- Regulators
- Sectionalizers and Switches
- Disconnects
- Overhead Circuit Inspection
- Reclosers
- Transformers (Pole-top)
- Fuses

4.1.2 Substation equipment, which includes:

- Capacitors (Substation)
- Circuit Switchers
- Lightning Arresters
- Oil Circuit Breakers
- Regulators
- Capacitor Switches (Vacuum)
- Disconnect Switches
- Load Tap Changers
- Potential Transformers
- Transformers (Substation)

4.1.3 Other equipment (as deemed necessary), which includes:

- Air Circuit Breaker
- SF6 Gas Circuit Breakers
- Underground Switches
- Vacuum Circuit Breakers
- Pad-Mounted Switchgear
- Underground Cables
- Underground Transformers
- Other DB Equipment

4.2 Survey Findings

4.2.1 The findings are classified as “Minor,” “Serious,” and “Emergency” in increasing order of severity. Refer to **TD 853 –** Infrared Thermographic Inspections for details. This TD has been endorsed by all three operating companies.

5.0 Inspection and Maintenance Activity Schedules

Table 1 – Infrared Survey Maintenance Intervals

Infrared Survey Maintenance Schedule	Interval
Time-Directed	
Infrared Survey – Substation	6M
Infrared Survey – Three-Phase Distribution Overhead Backbone	1Y (Note 1)
Infrared Survey – Transmission, Overhead	See **EMP 5.78**
Condition-Based	
Perform follow-up based on analysis of IR surveys	A/R
Failure Finding	
Report Emergency level findings immediately to the appropriate AWC personnel	A/R

NOTE: 1. Infrared inspections of three-phase distribution OH backbone on right of ways is NOT performed unless other conditions identified during the routine visual inspection warrant further investigation.

2. Perform an equipment visual and mechanical inspection prior to performing an infrared survey when applicable.

6.0 Maintenance Categories

6.1 Condition Monitoring

6.1.1 Not Applicable

6.2 Time-Directed

6.2.1 Routine Inspection

.1.1. Perform infrared surveys on all Distribution overhead three-phase backbone, Transmission overhead circuits and all substation equipment.

.1.2. Analyze the findings of the surveys, prioritize the actions to be taken, and distribute reports in accordance with **TD 853** - Infrared Thermographic Inspections.

.1.3. If deemed necessary, an oil sample can be taken to confirm an abnormally high and unacceptable temperature.

.1.4. Priority and response recommendations provided by the Thermographer are based solely on evaluated equipment condition and may be adjusted by maintenance management and/or work management personnel as necessary to accommodate scheduling concerns.

6.3 **Condition-Based**

6.3.1 Actions Based on Findings:

.1.1. Infrared surveys may find temperatures that indicate minor to serious conditions that require action ranging from more frequent inspection to immediate repair or replacement of the component.

7.0 Infrared Inspection Maintenance Basis Documentation

7.1 The maintenance activities and their schedules are based on industry experience, feedback from the Infrared Test Specialists, and subject matter experts.

Table 3 – Infrared Inspection Maintenance Basis Documentation

Requirement	Basis
Infrared Survey – 1Y	Industry Best Practices show that an annual Infrared survey provides reliable, continuous service in a cost-efficient manner.
Condition-Based Maintenance	Perform follow-up actions as required based on the results of survey analysis.

APPENDIX 20

NO LONGER USED