CL&P'S STANDARD FORM WIRELESS POLE ATTACHMENT AGREEMENT BETWEEN THE CONNECTICUT LIGHT AND POWER COMPANY DBA EVERSOURCE ENERGY AND THE FOR THE INSTALLATION OF MUNICIPAL EQUIPMENT

THIS AGREEMENT, made as of the date it is signed by Licensor ("Effective Date" or "effective date") by and between **The Connecticut Light and Power Company dba Eversource Energy**, a specially chartered Connecticut corporation with an office at 107 Selden Street, Berlin, CT 06037 (hereinafter called "Licensor"), and The City of Hartford, a municipal corporation existing under the laws of the State of Connecticut, having its government center located at 550 Main Street, Hartford, CT 06103 (hereinafter called "Licensee"). Collectively Licensor and Licensee are referred to herein as the "Parties" or singularly as a "Party".

WITNESSETH:

WHEREAS, Connecticut General Statute Section 16-247 has encouraged the shared use of existing facilities where possible; and

WHEREAS, this Agreement governs the terms and conditions under which the Licensor agrees to allow Licensee to attach certain specific Facilities (as said term is defined in Article II) to the Licensor's utility poles located in Connecticut; and

WHEREAS, the Licensor is willing to grant limited and restricted rights to the Licensee pursuant to applicable federal, state and local law and the terms of this Agreement for Licensee to attach its Facilities (as said term is defined in Article II) to such poles provided such attachments will not adversely affect the public service responsibilities or other public utility operations of the Licensor (as said term is defined in Article II), and provided that the Licensor is reimbursed for its costs and protected from liability which may arise there from; and

Capitalized terms used herein have the meaning assigned to such terms in Article II.

NOW THEREFORE, in consideration of the mutual covenants, terms and conditions herein contained, the Parties hereto do hereby covenant and agree as follows:

ARTICLE I
SCOPE

1. Subject to the provisions of this Agreement, Licensor will issue to Licensee a revocable, nonexclusive license authorizing the attachment of Licensee's Attachments and Facilities to Poles within the (i) public right-of-way and (ii) within those electric distribution easement areas located on private property that have been approved by Licensor, which approval by Licensor will not be unreasonably withheld; and Licensee's proposed installations shall be set forth in more detail in Licensee's application to Licensor for permission to attach to Poles. The Licensee understands that Licensor and Other Owners jointly own certain Poles, and with respect to such Poles that are jointly owned by Licensor and Other Owners, the Licensee shall be responsible for complying with (a) this Agreement and (b) the terms, conditions, policies, procedures and agreements of such Other Owners.

2. Notwithstanding any provision hereof to the contrary, (i) this Agreement is being entered into between Licensor and Licensee for the sole purpose of allowing Licensee, on a temporary basis, to install municipal devices (which are hereinafter included in the definition of Attachments) in the so-called "unusable" space on Poles in accordance with the terms of this Agreement; and (ii) the term of this Agreement shall commence on the Effective Date and continue thereafter until terminated in accordance with Article IX, Section 7, provided that the Licensee's obligations owed to Licensor that arose or accrued prior to the termination date, including Licensee's obligations hereunder for indemnification, defense, hold harmless, removal of its Attachments and to reimburse Licensor for the removal of Licensee's Attachments, shall survive the termination of this Agreement.

ARTICLE II
DEFINITIONS

0. Affiliate

An entity under common ownership or control with Licensee.

1. Anchor

A facility consisting of an assembly of a rod secured to a fixed object or plate designed to resist the pull of a guy strand or strands.

2. Appurtenance

Any article of equipment attached to a point on a Pole not normally occupied by a strand attachment (i.e., equipment cabinets, terminals, power supplies, etc.).

3. Attachment or Pole Attachment

An Attachment shall consist of one (1) municipal device and bolts, lags, screws, extension arms (only with specific approval of Licensor on an individual case basis), or other hardware necessary to attach one municipal device to a Pole as approved in advance in writing by Licensor pursuant to the terms of this Agreement, including but not limited to Licensor's standards for telecommunications devices in **Exhibit F** hereto, as applicable, and all supplements and amendments thereto adopted by Licensor from time to time even if copies of such supplements or amendments are not attached to this Agreement unless otherwise specified in this Agreement or in any License issued pursuant to this Agreement. The term "municipal device" includes a License Plate Reader system, Wi-Fi equipment, a security camera, or any public safety-related device to be attached on the approved pole at the approved location.

4. Days.

For purposes of this Agreement, all references to Day or Days shall be to calendar days.

5. Facilities or Licensee's Facilities

Attachments and all associated equipment, hardware and Appurtenances of Licensee (i) which Licensor has authorized in writing to be attached to one or more Poles pursuant to the terms of this Agreement and (ii) which have been installed for the sole use of the Licensee for any lawful purpose, excluding any wireline cable television or telecommunications facility used to provide backhaul because such wireline facilities are subject to, and governed by, a separate wireline pole attachment agreement between Licensor and Licensee. The singular term for Facilities is "Facility".

6. Guy Strand

A metal cable which is attached to a Pole and Anchor (or another Pole) for the purpose of reducing Pole stress.

7. Law

Any and all applicable federal, state and local laws, rules and regulations, orders, ordinances of a governmental authority, including but not limited to orders, rules, tariffs, policies, procedures and regulations of the Connecticut Public Utilities Regulatory Authority which was formerly known as the Department of Public Utility Control or its successor(s) (the "PURA"), including but not limited to the Setpember 29, 2010 decision in Docket No. 08-06-19 concerning the pole attachment make-ready process and June 30, 2010 decision in CL&P's rate case in Docket No. 09-12-05. All references herein to said PURA decisions include all amendments, supplements and clarifications thereto resulting from PURA decisions and/or from PURA-

monitored working groups.

8. Licensee

The person, corporation or other legal entity authorized by the Licensor under this Agreement to attach its Facilities to Poles and the party responsible for compliance with applicable Law and Licensor's rules, tariffs, policies, procedures and regulations regarding such accommodations.

9. Licensor

The Connecticut Light and Power Company dba Eversource Energy ("CL&P") and its successors and assigns.

10. Make-Ready Work (Initial/Additional)

All work performed by Licensor, the Other Owners and/or Other Licensees permitted to attach to Poles, including but not limited to, rearrangements and/or transfers of existing facilities, replacement of a Pole or any other work required to accommodate the attachment of Licensee's Facilities to a Pole. Similar work required after initial attachment to a Pole solely because of the existence of the Licensee's Faciliites shall be referred to as "additional Make-Ready Work."

11. Non-Conforming Construction/Shifting Fee

Has the meaning provided in Article VIII of this Agreement.

12. Other Licensees

Any person, corporation, or other legal entity, other than the Licensee herein, to whom the Licensor and/or Other Owners has or hereafter shall extend an authorization to attach facilities to a Pole.

13. Other Owners

Telephone companies that have joint ownership of Poles with Licensor and/or those telephone companies that have authorized CL&P to license attachment of Facilities and Appurtenances on such telephone companies' Poles or jointly owned Poles.

14. Periodic Inspection

Inspections conducted by Licensor on portions of Licensee's Facilities, to determine that Attachments and Facilities are authorized and that Attachments and Facilities are maintained in conformance with this Agreement.

15. Pole or Utility Pole

A pole solely owned or jointly owned by the Licensor and/or by an Other Owner and used to support Licensor's facilities, as well as the facilities of an Other Owner, Licensee and/or Other Licensees.

16. Post-Construction Inspection

The work operations and functions performed by Licensor to measure and/or visually observe Licensee's Attachments and/or Facilities within forty-five days after completion of the construction of such Attachments and/or Facilities, to determine that all Attachments and/or Facilities have been authorized and constructed in conformance with the standards required by this Agreement.

17. Pre-Construction Survey

The work operations and functions performed by Licensor to process Licensee's application for Pole Attachments to the point just prior to performing any necessary Make-Ready Work. There are two elements of the Pre-Construction Survey: (1) field inspection of the existing facilities, and (2) administrative effort required to process the Licensee's application and prepare the Make-Ready Work.

18. Unit Cost

A dollar amount subject to periodic revision, applicable to specified work operations and functions, including materials and labor costs.

19. Unauthorized or Non-Conforming Charges

Has the meaning provided in Article VIII of this Agreement.

ARTICLE III
PERMITS AND CONSENTS

1. Permits and Consents

a. The Poles covered by this Agreement shall be only such Poles that fall within the scope of this Agreement (as said scope if defined in Article I) with respect to which Licensor has the power and privilege of granting licenses. Licensee shall be responsible for obtaining from Other Owners, private and/or public authority any necessary easement, right of way, license, permit, permission, certification or franchise to construct, operate and/or maintain its facilities on private and public property at the location of the Pole to which Licensee seeks to attach its Facilities. Licensee shall furnish proof of any such easement, right of way, license, permit, permission, certification, or franchise within thirty (30) days of request by Licensor. The Licensor does not warrant the validity or apportionability of any rights it may hold to place facilities in the public right-of-way and on private property. The license granted to Licensee under this Agreement is granted on an "AS IS" basis, subject to applicable Law and existing and future rights of third parties; Licensor makes no representation, covenant or warranty as the quality of, scope of, and title to, the rights granted to Licensee under this Agreement.

b. The Licensee expressly recognizes that Poles are used and are to continue to be used primarily for the Licensor's electric utility-related purposes. Additionally, any licenses for Attachments and/or Facilities under this Agreement are personal to Licensee and are not for use by any entity other than Licensee for its own business purposes unless otherwise agreed to in writing by Licensor. Except as otherwise provided in this Agreement, the Licensee agrees that it will pay, as additional charges under this Agreement, all the costs incurred by the Licensor in connection with any work performed by the Licensor in order to provide or maintain space on any Pole for the Licensee's Attachments and/or Facilities, and any other costs incurred by the Licensor arising out of this Agreement, as hereinafter provided.

2. Requirement to Construct and Maintain a Pole and Anchor

Nothing contained herein shall be construed to compel the Licensor to construct, reconstruct, retain, extend, repair, place, replace or maintain any Pole or Anchor or other facility not needed for the Licensor's own service requirements. In the event that Licensor abandons any Pole to which Licensee's Facilities are attached, Licensor shall provide Licensee notice of such abandonment.

ARTICLE IV
PROCEDURES

1. Application for Authorization

a. In General. Licensor grants Licensee a non-exclusive right on an "AS IS" basis to attach its Facilities to any Poles for which Licensor has the power and privilege of granting licenses within Licensor's operating territory in the State of Connecticut in accordance with all applicable Law and the terms of this Agreement.

b. Application for Authorization for Proposed Third-Party Overlashings by Sub Licensee(s).

Intentionally blank.

c. Application for Authorization for Licensee's Proposed Attachments.

(i) Whenever the Licensee wishes a license to attach its Attachments and Facilities to any Poles, it shall make an application therefore on the forms, copies of which are appended to this Agreement as **Exhibits A and B** and Internet access to such forms is intended to be made available on a Licensor's website; *provided, however*, Licensor currently utilizes pole management software system called "AldenOne" to facilitate pole management practices, and therefore, Licensee shall be required to submit at Licensee's expense appropriate data (in the format and content as directed by Licensor) concerning Licensee's Attachments and Facilities into the AldenOne system or such other replacement electronic pole data management system that Licensor elects to utilize. The Licensee shall specify the location of the Pole or Poles involved and shall specify what Attachments and Facilities it wishes to attach to each Pole. Licensee must receive authorization from Licensor prior to commencing any attachment work. Licensee shall furnish Licensor with such engineering data as requested by Licensor including whether services charged at the telecommunications rate under Connecticut law are being carried. Each application shall include the Application Fee as set forth in Article VIII, Rates and Charges. Licensee shall file each application for such authorizations in blocks of five (5) Poles or fewer per application and all of the Poles in a single application must be located within the geographic boundary of a single municipality. If multiple applications are filed at one time, Licensee shall designate a desired priority.

(ii). Licensor shall process applications, perform any required engineering and surveys, perform any Make-Ready Work, and perform any other required functions on a first come first serve basis and in accordance with the PURA's September 29, 2010 decision in Docket No. 08-06-19 and aplicable Law. Licensor shall be under no obligation to grant any license, or if a license has already been granted, may cancel any such license on sixty (60) days' written notice, if in Licensor's judgment reasonably exercised the grant (i) would be or is in non-compliance with applicable Law or the requirements and specifications as denoted in Article IV, Section 2, or (ii) in instances of insufficient capacity, or for reasons of safety, reliability, or generally applicable engineering standards.

(iii) Licensor shall be under no obligation to grant or continue any license for an Attachment or Facility if Licensee has any outstanding and overdue payments owing to Licensor under this Agreement or any agreement with Licensor for the provision of Pole Attachments and/or installation of other facilities.

(iv). In accordance with the September 29, 2010 decision in Docket No. 08-06-19, Licensor shall have forty-five (45) days from (i) Licensor's receipt of a completed Pole Attachment application and all required application fees from Licensee and (ii) Licensee's satisfaction of the applicable provisions in this Agreement to prepare an estimate of the Make-Ready Work that is necessary to process Licensee's Pole Attachment application or issue a license.

d. Process Governing Proposed Overlashing by Licensee.

Intentionally blank.

2. Standards & Specifications for Attachments and Facilities.

a. Technical Standards Governing Licensee's Attachments and Facilities.

(i) Licensee's Attachments and Facilities shall be placed, maintained, relocated or removed in accordance with the requirements and specifications of applicable Law, the current editions of the Bell Operating Companies Manual of Construction Procedures (Blue Book), the National Electrical Code (NEC), the National Electrical Safety Code (NESC), the rules and regulations of the Occupational Safety and Health Act (OSHA), the Environmental Protection Agency (EPA), PURA and the Department of Energy and Environmental Protection (DEEP), any town ordinances, and the rules and regulation of any other governing authority having jurisdiction. Licensee's activities and Licensee's Attachments and Facilities shall also comply with Licensor's standards, polices, practices and procedures governing pole attachments, including the standards in **Exhibit F** hereto and Licensor's safety, reliability, construction and engineering requirements, each as may be updated from time to time which are included by reference herein and which shall be applied on a non-discriminatory basis. Where a difference in specification may exist, the more stringent shall apply. Licensee's Attachments and Facilities shall not physically, electronically, inductively, or otherwise interfere with the facilities of Licensor, Other Owners and Other Licensees. Licensee shall always maintain a twelve (12) inch (30.48cm) separation from any existing communications facilities. Attachments may only be located on the approved pole at the approved location which shall be no lower than 14'6" from the roadway. The municipal device will need a 120V service to be provided by the Licensee in accordance with **Exhibit F** that will run to the Licensee's enclosure to energize the municipal device. Municipal devices can only be installed in the specific geographic locations shown in **Exhibit G** hereto and any written supplements thereto approved by Licensor and Licensee from time to time.

(ii) The Licensee's Attachments and Facilities must also contain a manual shut-off device that is deemed to be acceptable by Licensor. When necessary, as determined by Licensor in its sole discretion, the Licensor, its employees or agents may turn-off Licensee's Attachments and Facilities in order to safely perform work. Neither Licensor, its employees or agents shall be liable to Licensee or any third party for any damages whatsoever whenever Licensee's Attachments and Facilities are turned-off in order to safely perform work or when Licensor is performing work on or near Poles in response to emergency situations or restoring electric service following storms and other weather events.

b. Additional Standards Governing Licensee's Attachments and Facilities.

(i) Licensee shall exercise all necessary precautions to avoid damage to facilities of Licensor, Other Owners, Other Licensees and of others occupying space on said Poles, and hereby assumes all responsibility for any and all loss from damage caused by Licensee. The Licensee shall make an immediate report to Licensor of the occurrence of any damage and, within 60 days of Licensee's receipt of a request for reimbursement, Licensee hereby agrees to reimburse Licensor, Other Owners and/or Other Licensees, as applicable, for any damage caused by Licensee.

(ii) Except in cases of emergency, Licensee shall not at any time make any additions to, or changes in, the location of its Attachments and/or Facilities covered by this Agreement without the prior written consent of Licensor. Where additions or changes are made without prior written consent and consent is otherwise required by this Agreement, permission shall be subsequently requested and confirmed in writing.

(iii) Licensee shall place a color coded (as determined by Licensor) label designating its ownership of any Facilities at each Pole. Such label must be recognizable by Licensor from ground level. If Licensee had existing licensed Facilities pursuant to a former agreement with Licensor and/or any Other Owner, Licensee shall label such existing Facilities. For all Facilities made or installed by Licensee after the Effective Date of this Agreement, the placement of such labels shall be

made by Licensee at the time each such post-Effective Date attachment or installation is made by Licensee; and with respect to those Facilites installed by Licensee prior to the Effective Date of this Agreement, the placement of such labels shall be made by Licensee in the ordinary course of work by Licensee on Poles containing such pre-Effective Date installations.

3. Pre-Construction Surveys and Make-Ready Work.

a. A Pre-Construction Survey will be required for each Pole for which attachment is requested to determine the adequacy of the Pole to accommodate Licensee's Facilities. The field inspection will be performed by representatives of the Licensor with optional participation by Other Owner(s), Other Licensees and the Licensee. Licensor shall use commercially reasonable efforts to provide advance notice to allow such optional participation.

b. (i) In the event the Licensor determines that a Pole to which Licensee desires to make attachments likely cannot accommodate Licensee's proposed Attachment(s) and/or Facility(ies) or needs rearrangement of the existing facilities thereon to accommodate Licensee's proposed Attachment(s) and/or Facility(ies), the Licensor will inform Licensee in writing of the cost of the required Make-Ready Work; (ii) charges for Make-Ready Work shall be as specified in Article VIII, Rates and Charges; and (iii) any costs directly related to the construction and installation of the new Pole, and the removal and disposal of the prior Pole, shall be considered Make-Ready Work charges; *provided, however*, notwithstanding the foregoing, if a Pole was not compliant with applicable Law or the standards set forth in Section IV(2)(a) of this Agreement prior to Licensee's request and if Licensee was not responsible in any way for such non-compliance, then any costs associated with changes required to bring such Pole into compliance shall not be charged to Licensee, and *provided further*, that this paragraph shall not constitute a release or waiver by Licensor of any claim that Licensor has or may have to recover the cost of correcting any non-compliance caused by Licensee.

c. Licensor shall specify the point of attachment on each of the Poles to be occupied by Licensee's Attachments and Facilities.

d. Licensee shall have forty-five (45) days from the receipt of written notification from the Licensor of the costs of Make-Ready Work to accept and pay all Make-Ready Work costs; provided, however, that if the Licensor receives a request from an Other Licensee for an authorization to attach to a Pole for which a written notification of Make-Ready Work costs has been sent to Licensee, then Licensee must accept the Make-Ready Work costs, within fifteen (15) days after receipt of notification from the Licensor of the other attachment request or by the end of the forty-five (45) day period, whichever period of time is shorter.

e. In accordance with the September 29, 2010 decision in Docket No. 08-06-19, Licensor shall have forty-five (45) days from (A) Licensor's receipt of full payment of the charges for Make-Ready Work and (B) Licensee's satisfaction of the applicable provisions in this Agreement to complete the Licensor's Make-Ready Work that is necessary to process Licensee's Pole Attachment application; *provided, however*, that (X) if any Other Owner or any third party must perform make-ready work in order to accommodate Licensee's proposed Pole Attachment, then (i) Licensor shall use commercially reasonable efforts to coordinate Licensor's Make-Ready Work with the make-ready work of such other entities so that such other entities have sufficient time within said 45-day period to perform their respective make-ready work and (ii) Licensor is not responsible for any delays in the performance of Licensor's Make-Ready Work if such delays are attributable to the failure of Other Owner(s) and/or any third party to timely perform shift or perform make-ready work on the facilities of such Other Owner(s)' and/or third party(ies); (Y) the April 30, 2008 decision in Docket No. 07-02-13, which was incorporated into the September 29, 2010 decision in Docket No. 08-06-19, extended such 45-day period by an additional 35 days if any Pole replacement is required to facilitate Licensee's proposed Pole Attachment; and (Z) Page 19 of the April 30, 2008 decision in Docket No. 07-02-13, which was incorporated into the September 29, 2010 decision in Docket No. 08-06-19, further extended such 45-day period (or 80-day period pursuant to subsection (Y) above) in the event "special situations . . . (e.g., inclement weather and emergency situations)" exist.

f. If the Licensor requires modifications to its facilities including, but not limited to, the replacement of a Pole, and if such modifications are necessary or appropriate for Licensor's electric utility-related purposes, and if such modifications would not be necessary except for the Licensee's Attachment to the Pole and/or Facilities, Licensee shall perform any such required modifications of its Attachments or Facilities at its sole cost and expense.

g. Upon notice from the Licensor, Licensee shall promptly perform (within the time period specified by Licensor) any make-ready work necessary on Licensee's Attachments and/or Facilities to accommodate an Other Licensee's attachment to a Pole and each such Other Licensee shall pay all costs for such make-ready work, provided, however, that Licensee is responsible for invoicing each such Other Licensee and collecting from each such Other Licensee payment for the costs incurred by Licensee to perform said make-ready work. The Licensor shall not be liable for any such expense. If Licensee fails to perform such make-ready work within the time period specified by Licensor, then the Licensor shall have (i) the right to assess the Non-Conforming Construction/Shifting Fee in accordance with Article VIII, Rates and Charges or (ii) the right, but not the obligation, to perform the make-ready work and charge Other Licensee the cost of performing such work.

h. Licensee shall reimburse Licensor for all traffic control costs incurred by Licensor to accommodate Licensee's Facilities and/or Attachments to Poles. When traffic control is necessary for Licensee during the performance of Licensee's make-ready work to accommodate attachments from Other Licensees to Poles, then such traffic control shall be arranged for by Licensee.

i. Licensee shall notify the Licensor in writing before adding to, relocating, replacing, adjusting or otherwise modifying its Attachments and/or Facilities on a Pole.

j. All tree trimming made necessary, by Licensee's proposed Attachments and/or Facilities shall be performed by Licensee or its contractors at the sole cost and expense of Licensee. Costs incured by Licensor for tree trimming associated with emergency and storm conditions shall be shared fully among all parties on a Pole, including Licensee; and costs for the performance of tree trimming associated with emergency and storm conditions are currenlty not recovered from Licensee in Licensor's semi-annual pole attachment rental charge in **Exhibit E** hereto.

k. All costs incurred by Licensor to accommodate Licensee's proposed Attachments and/or Facilities to Poles shall be reimbursed by Licensee to Licensor within 45 days of Licensor's request therefore. Such costs shall include, but are not limited to (i) costs directly related to the purchase, construction, removal and/or environmental disposal of Poles, and (ii) costs incurred in complying with applicable Law and/or town ordinances, decisions, directions, permitting requirements or ordinances of the EPA, DEEP, PURA or other governmental body having jurisdiction.

4. Inspections of Licensee's Facilities

a. Licensee shall provide written notice to the Licensor, at least twenty (20) days in advance of starting work, of the exact Pole locations where Licensee proposes to place its Attachments and Facilities. Licensee shall also notify the Licensor in writing within five (5) days of the date(s) of attachment of Licensee's Attachments and/or Facilities to the Poles.

b. The Licensor reserves the right to make Post-Construction and Periodic Inspections (of any part or all) of Licensee's Facilities and/or Attachments attached to Poles.

c. **Intentionally blank.**

d. The making of Post-Construction and/or Periodic Inspections or the failure to do so shall not operate to relieve Licensee of any responsibility, obligation or liability specified in this Agreement.

e. The costs of inspection made during construction and/or the initial Post-Construction Inspection are included in the Make-Ready Work charges. The costs of Periodic Inspections or any inspections found necessary due to the existence or potential existence of substandard, non-conforming or unauthorized Attachments and/or Facilities are the responsibility of the Licensee. Costs attributable to Periodic Inspections for unauthorized Attachments and/or Facilities, or non-conforming conditions, will be charged to the party responsible for the unauthorized Attachments and/or Facilities, or non-conforming condition in addition to Unauthorized or Non-Conforming Charges provided that no such costs can be collected from Licensee if any such cost is already recovered in the semi-annual Pole attachment rental rate that Licensor charges to Licensee pursuant to **Exhibit E** hereto.

5. Non-Conforming Conditions

a. (i) Any Attachment or Facility of Licensee that does not comply with the requirements of Article IV, Section 2(a) shall be deemed to be "non-conforming". Licensee shall be obligated to correct any non-conforming conditions within thirty (30) days of the date of the written notice from the Licensor and shall perform such correction itself or designate an Other Licensee to perform such correction (but no such designation of an Other Licensee to perform such work shall relieve Licensee of its obligations hereunder); provided, however, that: (A) the Licensee shall remedy each such non-conforming condition within the accelerated time period specified by Licensor if the Licensor determines that the non-conforming condition (i) constitutes a material threat to the public safety or the safety of the Licensor's employees, Other Owner's employees or Other Licensees, (ii) interferes with the performance of the Licensor's or Other Owner's service obligations, (iii) poses an immediate threat to the physical integrity of the Pole plant or (iv) must be corrected sooner than 30 days per applicable Law, including the April 30, 2008 decision in Docket No. 07-02-13 and September 29, 2010 decision in Docket No. 08-06-19, then Licensee shall remedy each such non-conforming condition within the accelerated time period specified by Licensor; and (B) if any non-conforming condition is deemed by Licensor to not to be "material", then Licensee shall have a total of 180 days to correct such non-conformance. Notwithstanding the foregoing, where correction cannot reasonably be completed within the applicable time period, Licensee shall be obligated to commence correction within thirty (30) days and to work diligently to complete correction as promptly as possible.

(ii) If the Licensee fails to correct any such non-conforming condition within the applicable time period then:

(A) the Licensee's permission to attach its Attachments and/or Facilities to the Poles in question shall be revoked forthwith, and/or

(B) Licensor shall have the right, but not the obligation, to correct said conditions and Licensee shall pay to the Licensor the cost of performing such work.

b. When such non-conforming conditions pose a material threat to the public safety or the safety of the Licensor's employees, Other Owner's employees or Other Licensees, interfere with the performance of the Licensor's or Other Owner's service obligations, or pose an immediate threat to the physical integrity of the Pole plant, the Licensor may perform such work and/or take such action that the Licensor deems necessary upon notice when practicable to Licensee and without any liability to Licensee or its customers, other than for Licensor's willful misconduct or gross negligence. If prior notice is not practicable, Licensor shall notify Licensee as soon as reasonably practicable after taking any such action. The cost of said work and/or actions shall be borne by Licensee.

c. Licensee shall be liable to Licensor for the Non-Conforming Construction/Shifting Fee set forth in Article VIII, Rates and Charges, for each Attachment and Facility for each day beyond the applicable time period described in Article IV, Section 5(a) above that the non-conforming condition remains uncorrected subject to the cap established herein.

6. Unauthorized Attachments

a. Licensee must receive prior written authorization from Licensor for any of the

following:

(i) attachment of any Appurtenances, Attachment and/or Facilities to Poles;

(ii) Sublicense or assignment of authorization as provided in Article IX, Section 5

b. Pre-Effective Date unauthorized Attachments Facilities. Intentionally blank.

c. Unauthorized Attachments Facilities and/or Third Party Overlashing. The following terms and conditions apply to unauthorized Attachments and Facilities. The Licensor, without prejudice to its other rights or remedies under this Agreement, including revocation or otherwise, may charge an Unauthorized Attachment Fee per Pole for each unauthorized Attachment and/or Facility, as specified in Article VIII, Section (4). Licensor will require the Licensee to submit in writing, a Pole Attachment application for all unauthorized Attachments andFacilities. If such application or notice, as appropriate, is not received by the Licensor within thirty (30) days after receipt of written notice by the Licensor of the unauthorized condition, Licensor may, in its sole discretion, require Licensee to remove its unauthorized Attachment and/or Facility within ten (10) days of the final date for submitting the required application, or the Licensor may remove each such unauthorized Licensee's Attachment and/or Facility without liability, and the cost of such removal shall be borne by the Licensee.

d. No act or failure to act by the Licensor with regard to any unauthorized Attachment and/or Facility shall be deemed as the authorization of such unauthorized Attachment and/or Facility; and, if any authorization should be subsequently issued, said authorization shall not operate retroactively or constitute a waiver by the Licensor of any of its rights or privileges under this Agreement, or otherwise, provided, however, that Licensee shall be subject to all liabilities, obligations and responsibilities of this Agreement in regard to said unauthorized Attachment and Facility from its inception.

7. Rearrangements and Shifting

a. (i) Licensor may elect to perform all rearrangements and shifting of Licensee's Attachments and/or Facilities as required in emergency or storm restoration conditions, vehicular accidents, threat to general public, public work projects and/or in order to comply with applicable Law, to accommodate Licensor, Other Owners, or Other Licensees, and during normal Pole moves, maintenance, and replacements provided that, to the extent practicable under the circumstances (as detemined by Licensor), prior notice and an opportunity to perform the rearrangement and shifting is provided to Licensee. With respect to any damage to Licensee's Attachments and/or Facilities caused by Licensor during or arising out of an emergency or storm restoration conditions, vehicular accidents, threat to general public, public work projects, Licensor shall not be liable therefore unless such damage was caused by Licensor's gross negligence or willful misconduct.

(ii) Licensor may rearrange and reattach Licensee's Attachments and/or Facilities as needed under emergency conditions, but is under no obligation to do so. If Licensor is unable to perform the rearrangement or shifting at its sole determination, in non-emergency conditions, for reasons including but not limited to technical concerns, safety concerns or risk of damage or interference with Licensees' Attachments and/or Facilities, Licensor shall contact Licensee and Licensee shall (A) perform any such rearrangement or shifting within the time period required by applicable Law (and if no time period is required by applicable Law then the time period shall be established by Licensor) and provide notice to Licensor of completion of such rearrangement or shifting or (B) authorize an Other Licensee to perform such rearrangement or shifting (but no such designation of an Other Licensee to perform such work shall relieve Licensee of its obligations hereunder). If Licensee fails to perform such rearrangement or shifting and provide notice to Licensor of completion within the applicable time period, the Non-Conforming Construction/Shifting Fee as set forth in Article VIII, Rates and Charges, will apply on a daily basis per rearrangement or shift location until notification from the Licensee that the work has been completed.

b. The costs of rearrangements and shifting, including the cost of traffic control, performed by Licensor on behalf of the Licensee will be borne by the Licensee as set forth in Article VIII, Rates and Charges.

c. Licensee shall arrange and pay the cost of any rearrangement or shifting, including traffic control, during rearrangements or shifting for which Licensee is responsible.

8. Extraordinary Events

In the event or circumstances beyond the control of either Party, including but not limited to severe storms, natural disasters, or other extraordinary events, which cause damage to Licensee's Attachments and/or Facilities, Licensor's facilities, Other Owner's facilities, Other Licensee's facilities and/or to Poles, or require replacement of Poles, Licensee shall be responsible for removing and/or reattaching its Attachments and Facilities to the Pole(s).

ARTICLE V
OTHER OBLIGATIONS OF LICENSEES

1. Insurance

a. Licensee shall carry insurance policies issued by an insurance carrier licensed to operate in the State of Connecticut or be otherwise self-insured as provided in subsection (g) of this section to protect the Licensor, as named or additional insured, from and against any and all claims, demands, actions, judgments, costs, and/or expenses, including attorney's fees, and liabilities which may arise or result, directly or indirectly, from or by reason of such loss, injury or damage for the amounts specified as follows:

b. The amounts of such insurance:

(i) against liability due to injury or to death of persons shall be not less than $1,000,000 as to any one person and $1,000,000 as to any one occurrence, and

(ii) against liability due to damage to property shall be not less than $1,000,000 as to any one occurrence.

c. Licensee shall also carry such insurance as will protect Licensee from all claims under any Worker's Compensation Law in effect that may be applicable.

d. All insurance must be effective before the Licensor shall issue authorizations for attachment of Licensee's Attachments, Overlashings and Facilities to any Pole, and shall remain in force as long as Licensee's Attachments, Overlashings and Facilities remain attached to any Pole. In the event that Licensee shall fail to maintain the required insurance coverage, the Licensor may pay any premiums thereon falling due and the Licensee shall reimburse the Licensor for any such payments made.

e. At the time the Licensee submits payment to Licensor for the most recent semi-annual rental charges/rates owed by Licensee to Licensor, the Licensee shall submit to the Licensor certificate(s) by each company insuring Licensee for all liabilities of Licensee referred to hereunder. Licensee shall ensure that its insurance policies provide that they will not cancel each such policy of insurance issued to Licensee except after thirty (30) days' prior written notice to the named insured parties. Licensor shall be named as additional insureds on such policy(ies) of insurance.

f. Licensee shall promptly advise the Licensor of all claims relating to damage to property or injury to or death of persons, arising or alleged to have arisen in any manner, directly or indirectly, by the erection, maintenance, repair, replacement, presence, use or removal of the Licensee's Facilities on Poles by Licensee or its assigns, agents and/or employees. Copies of all accident reports and statements related to such

claims made to the insurer by the Licensee, or others, shall be maintained and made available to the Licensor upon request.

g. Licensee shall be entitled to satisfy all or any portion of the insurance requirements set forth in this Article V through a valid self-insurance program, as long as Licensee provides Licensor with written proof of such self-insurance and such self-insurance complies with the requirements of this Article V.

2. Collateral (Surety Bond, etc.)

Intentionally Blank

ARTICLE VI
LIABILITY AND DAMAGES

1. Licensee (each an "Indemnifying Party") shall indemnify, hold harmless and defend Licensor and its officers, directors, employees, attorneys, agents and affiliates (collectively, the "Indemnified Party") from and against any and all claims, demands, causes of action and costs (including reasonable attorney's fees) ("Claims") for any damages to property or persons caused by the acts or omissions of the Indemnifying Party, its agents, contractors, employees or sublicenses; provided, however, that the indemnification obligations set forth in this Section VI(1) are limited to Claims arising out of, or associated with, the subject matter governed by this Agreement. An Indemnified Party shall notify the Indemnifying Party of any such claims, demands, causes of action and costs as soon as is reasonably practicable and shall cooperate in the defense of such matters.

2. In the event Licensee or Licensee's Attachments and/or Facilities physically or electronically damage or interfere with Licensor's, Other Licensee's or Other Owner's facilities, (i) Licensee shall promptly repair such damage and eliminate such interference at Licensee's expense and (ii) Licensee shall reimburse Licensor (within 30 days of Licensor's request for reimbursement) for all actual, consequential, indirect and special damages, costs, fees and expenses, including lost business profits and business interruption damages, sustained by Licensor, its employees, agents and/or Licensor's electric customers.

3. Should the Licensor remove Licensee's Attachments and/or Facilities from a Pole under Article VII, Revocation of Authorizations, the Licensor will deliver to the Licensee the Attachments and/or Facilities so removed upon payment by Licensee of the cost of removal, storage and delivery, and all other amounts due the Licensor. In the event that Licensee does not reimburse Licensor for the cost of removal, Licensor shall have the right to sell such removed Licensee Attachments and/or Facilities, with a power of public or private sale, to cover any amounts due the Licensor. Such remedy shall not operate to prevent the Licensor from pursuing, at its option, any other remedy in Law, equity or otherwise.

4. Licensor assumes no liability for failure to inspect any of Licensee's Attachments and/or Facilities.

ARTICLE VII
REVOCATION OF AUTHORIZATIONS; DISPUTE RESOLUTION

1. In addition to rights of termination provided to the Licensor under other provisions of this Agreement, the Licensor shall have the right to revoke authorizations for the attachment of Attachment(s) or Facility(ies) previously granted to Licensee (but not the right to terminate this Agreement)where:

a. the Licensee's Attachment(s) and/or Facility(ies) are maintained or used in violation of any Law, regulation or in aid of any unlawful act or undertaking; or

b. the Licensee ceases to have authority to construct and operate its Attachment(s), and/or Facility(ies) on public or private property at the location of the particular Pole covered by the authorization;

or

c. the Licensee fails to comply with any of the terms and conditions of this Agreement or defaults in any of its obligations hereunder and the applicable cure period, if any, has expired; or

d. the Licensee attaches to a Pole without having first been issued written authorization therefore; or

e. the Licensee, subject to the provisions specified in Article IX (5), Assignment of Rights, should cease to provide its services; or

f. the Licensees' Attachment(s) and/or Facility(ies) are used by others not a party to this Agreement and who have not been authorized by Licensor as specified in Article IV, Section 6, Unauthorized Attachments or Article IX, Section 5, Assignment of Rights; or

g. the Licensee sublicenses a portion of a licensed Attachment(s) and/or Facility(ies) to an entity not a party to this Agreement without permission from Licensor.

2. The Licensor will promptly notify the Licensee in writing of any instances cited in Article VII(1) preceding, upon its determination of the same. The Licensee shall take corrective action as necessary to eliminate the non-compliance with Article VII(1) and shall confirm in writing to the Licensor within thirty (30) days following such written notice that the non-compliance has ceased or been corrected. If Licensee fails to discontinue such non-compliance or to correct same and fails to give the required written confirmation to the Licensor within the time stated above, in addition to any other rights of Licensor under this Agreement, the Licensor may elect to (i) revoke the authorizations granted hereunder for Poles as to which such non-compliance continues to occur, or (ii) cure Licensee's non-compliance, in which case Licensee shall reimburse Licensor (within 30 days of Licensor's request for reimbursement) for all costs incurred by Licensor to cure Licensee's non-compliance with Article VII(1), and Licensee shall indemnify Licensor from any damage caused to Licensee's Attachment(s) and/or Facilities and/or other property resulting from Licensor's curative actions except that such indemnificaion shall not extend to any damage directly resulting from Licensor's willful misconduct or gross negligence.

3. This entire Agreement and all authorizations and rights granted under this Agreement may be immediately terminated by the Licensor if:

a. The Licensee's insurance carrier shall at any time notify the Licensor that the policy or policies of insurance as required in Article V, Other Obligations of Licensee, will be or have been canceled or amended so that those requirements will no longer be satisfied.

b. The Licensee shall fail to pay any sum due or to deposit any sum required under this Agreement, or shall fail to maintain satisfactory security as required in Article V, Other Obligations of Licensee, Section 2.

c. Any authorization which may be required by any Law, governmental or private authority for the construction, operation and maintenance of the Licensee's Attachment(s) and/or Facility(ies) on a Pole is denied, revoked, or canceled in a final, non-appealable order.

d. Upon evidence from the Licensor to the Licensee that the use of any Pole or Poles is forbidden by Law and/or federal or state authorities, permission to attach to such Pole or Poles shall be immediately revoked and the Attachment(s) and/or Facility(ies) of the Licensee shall be removed at once from the affected Pole or Poles by the Licensee.

e. The Licensor determines that any Attachment or Facility of Licensee does not contain the safety shut-off device(s) required by Licensor.

4. Licensee may at any time remove its Attachment(s) and/or Facility(ies) from a Pole after first

giving the Licensor written notice of Licensee's intention to so remove. Before any Attachment(s) and/or Facility(ies) can be removed from a Pole, Licensee shall provide Licensor with completed copies of the forms in **Exhibits C and D** hereto which identify each Pole affected by Licensee's request to remove; *provided, however*, Licensor currently utilizes pole management software system called "AldenOne" to facilitate pole management practices, and therefore, Licensee shall be required to submit at Licensee's expense appropriate data (in the format and content as directed by Licensor) concerning Licensee's Attachments and Facilities into the AldenOne system or such other replacement electronic pole data management system that Licensor elects to utilize.

5. In the event of termination of any of the Licensee's authorizations hereunder, the Licensee will remove its Attachment(s) and/or Facility(ies) from the Poles within a reasonable period in light of the number of attachments (and if a reasonable period of time cannot be mutually approved by Licensor and Licensee, then Licensee shall have one year from the date of termination of this Agreement to perform such removal work); provided, however, that Licensee shall be liable for and pay all fees and charges pursuant to provisions of this Agreement to the Licensor until Licensee's Attachment(s) and/or Facility(ies) are actually removed from the Poles. If the Licensee fails to remove its Attachment(s) and/or Facility(ies) within the specified period, the Licensor shall have the right, but not the obligation, to remove such Attachment(s) and/or Facility(ies) at the Licensee's expense and without any liability on the part of the Licensor for damage or injury to such facilities or interruption of Licensee's services. In the event Licensor removes any of Licensee's equipment from Poles pursuant to this Section, Licensor may hold such equipment as security for the payment of any sums due under this Agreement or may sell such equipment at a public or private sale without notice to the Licensee or may turn such equipment over to the Licensee, or may do any combination of these things. In the event that Licensor sells any of the Licensee's equipment, Licensor shall apply the proceeds to the payment of sums due under this Agreement and shall turn the balance, if any, over to the Licensee.

6. When Licensee's Attachment(s) and/or Facility(ies) are removed from a Pole, no Attachment to the same Pole shall be made until the Licensee has first complied with all of the provisions of this Agreement as though no such Pole attachment had been previously made and all outstanding charges due to the Licensor for such Pole attachment have been paid in full.

7. Dispute Resolution.

Either Party may, at any time, submit a dispute for resolution by PURA. If PURA (i) declines to exercise jurisdiction over the dispute or (ii) fails to issue a decision or order within 180 days of the submission of the dispute to PURA, then at any time thereafter either Party can seek relief from a court located in the State of Connecticut or agency of competent jurisdiction located in Connecticut. Nothing herein shall prevent Licensee or Licensor from filing a complaint with PURA or another agency located in Connecticut or court of competent jurisdiction located in Connecticut at any time.

ARTICLE VIII
RATES AND CHARGES

The Licensee is responsible for payment of all rates and charges as specified elsewhere in this Agreement and as set forth below. Licensee shall be responsible for payment of the Application Fee and all charges for Make-Ready Work, in advance for work performed or expenses incurred by the Licensor regardless of whether Licensee subsequently withdraws its application for Attachment authorizations for the Poles on which such work was performed.

Licensee agrees that, in the event Licensee fails to pay an amount due and payable within the period of time set forth for payment in this Agreement, interest shall accrue on the unpaid balance thereof at the rate of 1 and 1/2% per month for each month from the expiration of such period until payment is received by Licensor or the maximum interest rate permitted by Law, whichever is the lesser amount.

1. Agreement Establishment Fee

The Agreement Establishment Fee as specified in **Exhibit E** shall be due and payable upon the execution of this Agreement. Licensor shall be under no obligation to process Pole attachment applications prior to receipt of payment of this fee.

2. Application Fee

The Application Fee shall be included with each application submitted by Licensee to Licensor. The Application Fee includes Licensor's provision of engineering and Pre-Construction Survey. The Application Fee is comprised of two rate elements, a non-recurring charge per application and a per Pole charge. Licensor shall be under no obligation to accept any application without the Application Fee as specified in **Exhibit E**.

3. Pole Attachment License Fee

a. The Pole Attachment License Fee will be assessed on a per Attachment basis as set forth in the current schedule of rates in **Exhibit E**.

b. Intentionally omitted.

c. Intentionally omitted.

4. Unauthorized Attachment

The Unauthorized Attachment Fee specified in **Exhibit E** will be charged on a per Pole basis for any post-Effective Date (i) unauthorized Attachment and/or unauthorized Facility, or (ii) unauthorized use of a Pole Attachment or Facility; provided, however, the Licensee's total Unauthorized Attachment fee for an individual Attachment or Facility attached to a Pole shall not exceed the cap established

5. Charges for Make-Ready Work, Rearrangement/Shifting, Post-Construction Inspection and Periodic Inspection

Make-Ready Work charges shall be billed and shall be payable up to forty-five (45) days prior to the commencement of work on individual Poles, according to the current Schedule of Rates in **Exhibit E**. Make-Ready Work Charges for proposed Attachments will reflect Licensor's provision of Post-Construction Inspections. Rearrangement/Shifting charges and Periodic Inspection charges incurred by Licensor for Attachments and Overlashings will be billed according to the current Schedule of Rates in **Exhibit E**.

6. Bill Detail

Bills shall include sufficient detail of the fees and charges set forth therein.

7. Non-Conforming Construction/Shifting Fee

The Non-Conforming Construction/Shifting Fee specified in **Exhibit E**, will be charged on a per day and per Pole basis for (a) any non-conforming construction performed by the Licensee which is not brought into conformance within the applicable time period identified in Article IV, Section 5 or (b) for any failure to timely perform rearrangements and shifting as set forth in Article IV, Section 7 or (c) pursuant to Article IV, Section 3(g) for Licensee's failure to timely shift or perform make-ready work on Licensee Attachment(s) and/or Facility(ies) in order to accommodate a request to attach to Pole(s) by any third party in accordance with the make-ready work and pole shifting time periods set forth in applicable Law, including in the April 30, 2008 decision in Docket No. 07-02-13 and September 29, 2010 decision in Docket No. 08-06-19, as amended; provided, however, notwithstanding the foregoing, (y) Licensee's total Non-Conforming Construction/Shifting Fee for an individual Attachment and/or Facility to a Pole shall not exceed the cap established by the PURA in **Exhibit H** hereto, as it may be amended by the PURA or pursuant to applicable Law; and (z) Licensee will not be assessed a Non-Conforming Construction/Shifting Fee for each day during which (i) it is impossible for Licensee to timely shift or perform make-ready work on Licensee Attachment(s) and/or Facility(ies) due to the attachments of Licensor or a third party who is unaffiliated with Licensee and over whom Licensee has no control and (ii) during the period in which Licensee claims it was unable to perform such shifting and/or make-ready work and Licensee has used commercially reasonable efforts to notify Licensor or the third party of the impediment caused by Licensor or such third party.

8. Payment of Rates and Charges

Unless otherwise provided elsewhere in this Agreement, Licensee shall pay all rates and charges, as specified in the Agreement, within thirty (30) days from the dates of billing thereof. If Licensee disputes any amount invoiced by Licensor, Licensee shall make payment of the invoice in full and shall notify Licensor in writing of the disputed amount. Licensee may dispute any amount within ninety (90) days after the date that payment has been made. Licensee shall include any documentation supporting its position in such written notification. The Parties shall work together to resolve the dispute in an expeditious manner. In the event the dispute is resolved in the favor of the Licensee, or Licensor, then the other Party shall include interest calculated at the rate set forth above in Article VIII, Rates and Charges.

9. Amounts Due to Other Owners

Any references in this Agreement to payment, compensation, or reimbursement due to an Other Owner are separate from the rates and charges set forth in this Article VIII and **Exhibit E**, and shall remain payable by Licensee regardless of the rates and charges described herein.

10. Amendment of Rates and Charges

With respect to the rates and charges set forth in this Agreement, including but not limited to those rates and charges set forth in this Article VIII and in **Exhibit E** hereto, the Licensor may elect to amend such rates and charges using either of the following two different approaches: (i) if Licensor determines that it is unnecessary to obtain approval from any governmental authority, including the PURA, to amend such rates or changes, then Licensor may elect to amend such rates or charges upon providing thirty (30) days prior written notice thereof to Licensee and each such amended rate or charge shall automatically take effect upon the 30th day after Licensee receives such notice; or (ii) if Licensor determines that it is necessary to obtain approval from any governmental authority, including the PURA, to amend such rates or charges, then such rates or charges shall automatically take effect on the date that the appropriate governmental authority has approved the Licensor's request to amend such rates or charges. In the event of any conflict between the terms of this paragraph and the other provisions or Exhibits in this Agreement, then the terms of this paragraph shall control.

11. Electric Service Fee.

Electric service to Attachments and Facilities (or any other Licensee equipment whether or not such equipment was authorized under this Agreement) shall be paid by the Licensee to Licensor on a monthly basis in accordance with the Licensor's terms and conditions, rates and riders approved by PURA and as may be amended from time to time and also in accordance with the then most applicable tariff rate of Licensor. As of the Effective Date, the current most applicable tariff rate is the Licensor's "Rate 115" on file with PURA. Licensee acknowledges and agrees (i) that this electric service fee is a fee separate and distinct from the semi-annual Pole rental charges, application fees and make-ready expenses described in **Exhibit E** hereto and (ii) that a separate security deposit relating to the electric service fee and calculated (and, if applicable, refundable) in accordance with the applicable state regulations shall be due and payable by the Licensee and that deposit shall be in addition to the security required under this Agreement.

ARTICLE IX
GENERAL TERMS AND CONDITION

1. Compliance with Applicable Laws

The Licensee and the Licensor shall at all times observe and comply with, and the provisions of this Agreement are subject to all applicable Laws, which in any manner affect the rights and obligations of the Parties; any such applicable Law shall automatically supersede any conflicting provisions in this Agreement; and should any term of this Agreement be determined by a court or other entity with competent jurisdiction to be unenforceable, all other terms of this Agreement shall remain in full force and effect.

Each Party shall also comply with applicable provisions of the Fair Labor Standards Act of 1938, as

amended, and the Federal Occupational Safety and Health Act of 1970 (OSHA), as amended, and with any rules and regulation under such Acts as well as other applicable Laws.

Licensee shall be responsible for obtaining from the appropriate authority any required authorizations to operate and/or maintain its Attachments and/or Facilities on public and/or private property before it attaches, rearranges, or removes any Attachments and/or Facilities to any Pole(s). Licensee shall supply to such authorities any information pertaining to their installation as shall be legally required.

2. Rights in Poles

No use, however extended, of a Pole or payment of any fee or charge required hereunder shall create or vest in the Licensee any ownership or property right in such a Pole, but the Licensee's rights herein shall be and remain a revocable license. Licensor and the Other Owners, as applicable, are and shall remain the owners of all Poles, Anchors and Guy Strands covered by this Agreement.

3. Other Agreements

Nothing contained herein shall be construed as a limitation, restriction, or prohibition against the Licensor with respect to any agreement(s) and arrangement(s) which the Licensor has entered into, or may in the future enter into, with others not covered by this Agreement, except that authorizations for Attachments existing at the time of such future agreements or arrangements shall not be diminished. The rights of Licensee shall at all times be subject to such existing and future agreement(s) or arrangement(s).

4. License Not Exclusive

Nothing herein contained or elsewhere shall be construed as a grant of any exclusive license, right or privilege to Licensee. Licensor shall have the right to grant, renew and extend rights and privileges to others not parties to this Agreement, by contract or otherwise, to use any Poles covered by this Agreement.

5. Assignment of Rights

Licensee shall not assign or transfer any authorization granted herein without the prior written consent of the Licensor except that Licensee may assign all of its rights and obligations granted herein to an Affiliate without prior consent in which case: (i) Licensee shall notify Licensor of such assignment or transfer to an Affiliate within thirty (30) days of the assignment, (ii) said assignment to an Affiliate shall not become valid until the assignee has provided Licensor with a written assignment & assumption agreement in which the assignee has contractually agreed to assume all of Licensee's rights and obligations hereunder and (iii) said assignment to an Affiliate shall not release Licensee of its obligations hereunder unless Licensor agrees in writing to release Licensee from its obligations hereunder.

6. Waiver of Terms and Conditions

Failure to enforce or insist upon compliance with any of the terms or conditions of this Agreement or failure to give notice or declare this Agreement to be in breach, to be in default or to be revoked or failure to declare any authorization granted hereunder to be revoked shall not constitute a waiver or relinquishment of any such term, condition or act but the same shall be and remain at all times in full force and effect.

7. Term of Revocable License.

The initial term of this Agreement shall be for one (1) year commencing on the Effective Date. At the expiration of the initial term, this Agreement shall continue for successive six (6) month periods under its then existing conditions unless and until a Party hereto gives no less than 90 days written notice of termination prior to the expiration of the initial term or the six (6) month extension then in effect; *provided, however*, that the termination of this Agreement by either Party shall not waive or release the contractual obligations of each Party that arose or

accrued under this Agreement prior to such termination. Licensee is responsible for removing its Attachments from Licensor's Poles upon the termination of this Agreement.

8. Entire Agreement

This Agreement supersedes all previous agreements between the Parties for maintenance and placement of Attachments and Facilities by the Licensee and constitutes the entire agreement between the Parties with respect to the specific subject matter hereof. It may not be modified or amended nor may any obligation of either Party be changed or discharged except in writing signed by the duly authorized officer or agent of the Party to be charged, (a) except to the extent that this Agreement is automatically amended by applicable Law as described in Article IX, Section 1 and (b) except to the extent the Licensor's Wireline Pole Attachment Agreement, which was approved by PURA in January 2011 in Docket No. 09-12-05 and which serves as the basis for numerous provisions in this Agreement, is amended in an existing or future PURA docket and/or PURA working group process in which case Licensor reserves the unilateral right to elect to require that conforming amendments be made to this Agreement to ensure consistency, where applicable, between this Agreement and the above-described PURA-approved Wireline Pole Attachment Agreement and any such amendments shall automatically take effect 30 days after Licensee receives written notice thereof from Licensor. Currently effective licenses, if any, issued pursuant to previous agreements shall remain in effect as if issued pursuant to this Agreement. This Agreement may be executed in counterparts; and for purposes of this Agreement, a photocopy or facsimile copy of a signature page shall be deemed to be an original.

9. Notices

Any notice to be given to either Party under this Agreement shall be sent by (a) certified mail, return receipt requested and such notice shall be effective immediately upon being deposited in the United States mail, (b) overnight mail via a nationally recognized courier service (i.e., UPS or Federal Express) and such notice shall be effective upon delivery by said overnight courier, or (c) facsimile with a confirmation and such notice shall be effective upon confirmation of facsimile; and notices shall be addressed to:

Licensee:
Arunan Arulampalam, Mayor
City of Hartford
550 Main Street
Hartford, CT 06103

with a copy to:

Jonathan Harding
Corporation Counsel
City of Hartford
550 Main Street, Suite 210
Hartford, CT 06103

Licensor:
CL&P dba Eversource Energy
107 Selden Street
Berlin, CT 06037
Attn: Vice President, Energy Delivery Services

with a copy to:
Eversource Energy Legal Dept.
107 Selden Street
Berlin, CT 06037
Attn: State Regulatory Attorney

10. Taxes

If the presence of the Licensee's Attachments and/or Facilities on Licensor's Poles causes Licensor to pay any new or additional tax which is attributable to, or results from, Licensee's Attachments and/or Facilities, Licensee shall reimburse Licensor to the full extent of such new or additional tax, as additional charges, within thirty (30) days of receiving a bill therefore from Licensor.

11. Governing Law

This Agreement shall be governed by, and interpreted according to, the laws of the State of Connecticut.

12. List of Exhibits

Exhibit A: Structure Access Request – Poles Connecticut
Exhibit B: Pole Data Sheet - Connecticut
Exhibit C: Notification of Removal of Pole Attachment By Licensee
Exhibit D: Pole Data Sheet – Removals
Exhibit E: Rates and Charges
Exhibit F: Intentionally Deleted
Exhibit G: List of Poles on Which Licensee Can Install Municipal Devices
Exhibit H: PURA-Approved Caps on Non-Municipal Unauthorized Attachment/Overlashing Fees and Non-Conforming Construction/Shifting Fees

[Signature Page Follows]

IN WITNESS WHEREOF, the parties hereto have executed this Agreement on the Effective Date, which is defined as the date on which Licensor signed this signature page.

LICENSEE: City of Hartford

By: [signature]

Title: Mayor

Date: 7-24-26

Approved as to legality and form

Corporation Counsel

Jonathan Hardy

LICENSOR: THE CONNECTICUT LIGHT AND POWER COMPANY dba EVERSOURCE ENERGY

By: David J Gladey David Gladey

Title: Vice president Distribution Engineering

Date: 7-27-26

EVERSOURCE

107 Selden Street
Berlin, CT 06037

EXHIBIT A - *Structure Access Request – Poles Connecticut*

To: Third Party Administrator – BMN1
Connecticut Light and Power dba Eversource Energy
107 Selden Street
Berlin, Ct 06037

Customer Application Number _____

A payment of $_____ for the application and survey costs, must accompany this application form.

In accordance with the terms and conditions of the Pole Attachment License Agreement between (Company Name) and CL&P, application is hereby made for a License to attach communication facilities to (number) poles as indicated on the Pole Data Sheet in the municipality of _____.

Applicant to indicate action below:

☐ This authorizes CL&P to perform a Field Survey whereby CL&P will determine the availability of pole structure for occupancy, will estimate what Make Ready work would be required to prepare the poles for occupancy, and will provide an estimated cost for that Make Ready work. Enclosed is a deposit of $_____ to be applied toward the cost for CL&P to perform the Field Survey. The cost for the Field Survey will be:

$0 + ($ 25 X _____ Poles = $ _____) = $ _____.
(Application Fee) *(Unit cost per Pole)* *(No. Poles)* *(Total Fixed* Charge)

It is understood that this will be the total cost for the Field Survey work unless extraordinary expenses are incurred or changes are requested by Applicant that increase the costs.

By signing this application you agree to follow the terms of the above-cited Pole Attachment License Agreement, all applicable laws, and all applicable CL&P policies, procedures and guidelines.

_____
(Company Name of Applicant (not name of Agent))

_____
Billing address for re-occurring lease bill)

_____
(City, State & Zip code)
(___) ___ - ____ ext _____
(Telephone Number)

_____
(Office address if different)

_____
(City, State & Zip code)
(___) ___ - ____ ext _____
(Telephone Number)

_____
(Signed)

_____
(Printed)

_____
(Title)

_____
(Date)

_____
(E-Mail Address)

(To be completed by CL&P Only)

Application # _____

Project #: _____

NOTE: In order to process your request, all necessary drawings and/or maps must be attached when sent via email. If they cannot be sent electronically mail the application to the address stated on the top of this form.

EVERSOURCE

107 Selden Street
Berlin, CT 06037

EXHIBIT B

Pole Data Sheet - Connecticut

Applicant Contact Name and Address _____ Sheet 1 of __

Customer Application Number Municipality

Requested number of poles required for attachments in this application Applicant Map Number

ensee Pole #	Location	Pole Owner	Proposed Attachment	Weight per foot or each?	Make Ready Req' d? (Y or N)	Other Co Work Req' d? (Y or N)	Description of Make Ready Work and Additional Comments

The applicant represents, covenants and warrants that this application complies with applicable federal, state and local laws and the pole attachment agreement between applicant and CL&P.

NOTE: In order to process your request, all necessary drawings and/or maps must be attached when sent via email. If they cannot be sent electronically, please send request forms directly to:
Third Party Administrator – BMN1

EVERSOURCE

107 Selden Street
Berlin, CT 06037

EXHIBIT C

Notification of Removal of Pole Attachment By Licensee

To: Third Party Administrator - BMN1
Connecticut Light and Power dba Eversource Energy
107 Selden Street
Berlin, Ct 06037

In accordance with the terms and conditions of the Pole Attachment License Agreement between (Company Name) and CL&P dba Eversource Energy, dated_____ please cancel from your records the poles as indicated on the attached Pole Data Sheet in the municipality of _____, covered by the licenses indicated from which our attachments were removed on _____.

_____ _____
(Company Name of Applicant (not name of Agent)) (Signed)

_____ _____
Billing address for re-occurring lease bill) (Printed)

_____ _____
(City, State & Zip code) (Title)
(___) ___-____ ext_____ _____
(Telephone Number) (Date)

_____ _____
(Office address if different) (E-Mail Address)

_____
(City, State & Zip code)
(___) ___-____ ext_____
(Telephone Number)

Receipt of the above notice is hereby acknowledged -

_____
(Signed)

_____
(Printed)

_____
(Title)

_____
(Date)

EVERSOURCE

107 Selden Street
Berlin, CT 06037

EXHIBIT D

Pole Data Sheet – Removals

Applicant Contact Name and Address

Sheet 1 of

License Number

License Issue Date

Number of poles where attachments were removed

Municipality

Licensee Pole #	Location	Pole Owner	Notes

EXHIBIT E
SCHEDULE OF RATES[1]

1.	Pole Attachment License Fee:	$0[2] per Pole, per Year
2.	Third Party Overlash Fee	Not applicable
3.	Agreement Establishment Fee:	$0
4.	Application Fee Per Application: Plus Add'l Survey Fee Per Pole:	$0 $25
5.	Unauthorized Attachment/Overlashing Fee - Per Pole For Solely Owned Poles	$84.60[3]
6.	Non-Conforming Construction/Shifting Fee For Solely Owned Poles:	$84.60.[3] per Pole per Day
7.	Make-Ready Work Charges Rearrangement/Shifting Fee Periodic Inspection Fee	Time & Materials

[1] There may be additional costs, fees and/or charges billed to Licensee for Make-Ready work and/or costs incurred by Other Owners and/or Other Licensees. Rates shown above only reflect Licensor's costs, fees and charges, which Licensor has adjusted because Licensee is a municipality, and because Licensee's Attachments will only be in place for the contract term (see Article VII). In addition, pursuant to Article VIII(10) of the Agreement to which this Exhibit E is attached, the rates and charges set forth in this Exhibit E are subject to change in accordance with the process described in said Article VIII(10) of the Agreement.

[2] C.G.S. 16-233 states that Municipality "shall have the right to occupy and use for municipal and state signal wires, without payment therefor, one gain upon each public utility pole . . . installed by a public service company within the limits of any such town, city, borough or district. . . ." Pursuant to Section 16-233 and the May 17, 2000 DPUC decision in Docket No. 99-03-25RE01, for each Municipality the (i) Pole Attachment Telecommunications License Fee is $0 for a Pole Attachment installed in "one gain upon each public utility pole" and the Overlash Fee is $0 for each Overlashing installed in "one gain upon each public utility pole" and (ii) the Pole Attachment Telecommunications License Fee shall be the Licensor's then-current PURA-approved rate for telecommunications attachments per year per pole for each Pole Attachment installed in an additional gain upon each public utility pole ("Additional Gain") and the Overlash Fee is Licensor's then-current PURA-approved rate for overlashing telecommunications attachments per year per year per pole for each Overlashing installed in an Additional Gain.

[3] These fees/charges are subject to the then-current cap established by the PURA.

Exhibit F

PURPOSE The purpose of this standard is to describe the general requirements and show the typical construction and clearances needed for a side-mounted distributed network camera installed in the communication space of an electric distribution pole..

GENERAL REQUIREMENTS

The camera attaching entity must apply to the appropriate Eversource Energy office for the attachment approval and determination of make ready work costs for each pole. All approved poles will require an attachment agreement with Eversource Energy prior to any installation work.

Any style of new camera installations is not allowed on distribution poles that contain any of the following equipment or construction:

- Any primary connected equipment (transformers, switches, regulators, reclosers, capacitors, etc.) operating over 600 Volts.
- Any other communications equipment or camera belonging to Eversource Energy or another entity (i.e., Cable Television Power Packs).
- Any pole with a primary riser, three-phase secondary riser, multiple secondary risers, or a single-phase secondary riser with conductors greater than 4/0 in size.
- Locations that cannot be accessed by a standard bucket truck.
- Three and four-way primary junction poles.
- Poles that would require guying and anchoring to be added or upgraded to support wire and equipment loads until rights are subsequently secured and guying and anchoring is installed.
- Poles with existing riser congestion (all utilities) that encircles more than 40% of pole circumference.

1) Applicable codes and other approvals needed:
   a. All installations shall be in compliance with the applicable codes, wiring inspector requirements and the Eversource Energy "Information and Requirements for Electric Service." Installation and maintenance will be performed in compliance with OSHA requirements and Eversource Energy Safety requirements for work in energized areas. NESC minimum requirements shall be met or exceeded in all cases.
   b. The wireless company shall obtain permission from the local municipality and Eversource Energy prior to installation of the equipment.

2) Attacher Requirements:
   a. A professional engineer licensed in the state where the attachment is proposed must evaluate each camera model with respect to pole class. Items to be evaluated include, but are not limited to, pole weight loading, wind, and ice loading, and NESC compliance. The professional engineer must stamp and sign off on the design before construction can begin. The approved designs can be reused for different installations provided that the professional engineer specifications and all other requirements in this standard are met. However, each installation will require a pole inspection and guying evaluation performed by Eversource Energy.
   b. At the cost of the attacher, a study of the pole adequacy and integrity with the new equipment installed will be performed.
   c. Attacher pays all costs for the new pole, transfer work and make-ready work before any work is to begin.

3) Attacher shall provide and install the following – Construction Notes:
   a. Weatherhead in a location suitable to form a drip-loop and to make secondary connections.
   b. Conduit shall be two inch PVC, heavy wall sunlight resistant (6 percent-7 percent titanium dioxide by weight), Schedule 40 as per ANSI/NEMA TC 2-2020. Conduit riser shall be installed

bell end down and extend two inches above the secondary or neutral height. Riser shall be installed on the pole opposite the flow of traffic.

c. Disconnect and overcurrent protection sized and designed in compliance with NEC requirements for outdoor installations. This may be located in a separate compartment for CT/WMA installations.

d. Grounding shall be furnished, installed, and connected using NEC approved ground electrodes.

e. All devices are to be mounted over one another on the same side of the pole. Arrange all pole equipment to allow at least one clear third of the pole, dimensions per NESC climbing space.

f. Camera and all mounting brackets shall have galvanized steel mounting bases. These shall be secured to the pole with galvanized hardware of adequate strength for the load.

4) Minimum clearances from camera to energized wires:

a. Camera and mounting brackets shall maintain a minimum clearance of six (6) feet in any direction from lowest primary conductor. See Pole Installation Details below.

b. Reserved primary space requirements shall be identified by Eversource Energy engineering based on the type of primary construction that is anticipated for the pole in question.

c. Camera and mounting brackets shall maintain a minimum clearance of four feet in any direction from mast to the secondary main cable. Secondaries may be at the pole top or below a primary. See Pole Installation Details below.

d. Camera shall be mounted on a bracket. See Pole Installation Details below.

5) Any required vegetation management is the responsibility of the pole attaching entity.

6) Rules for taking camera outages for pole maintenance:

a. Eversource Energy is responsible for giving a 24 hour notice to the pole attaching entity prior to locking and tagging out cameras for scheduled outages.

b. Eversource Energy may lock and tag out cameras without a 24 hour notice for emergency work.

c. Eversource Energy must contact the pole attachment customer once the work is complete and the camera is re-energized.

DTR 07.305

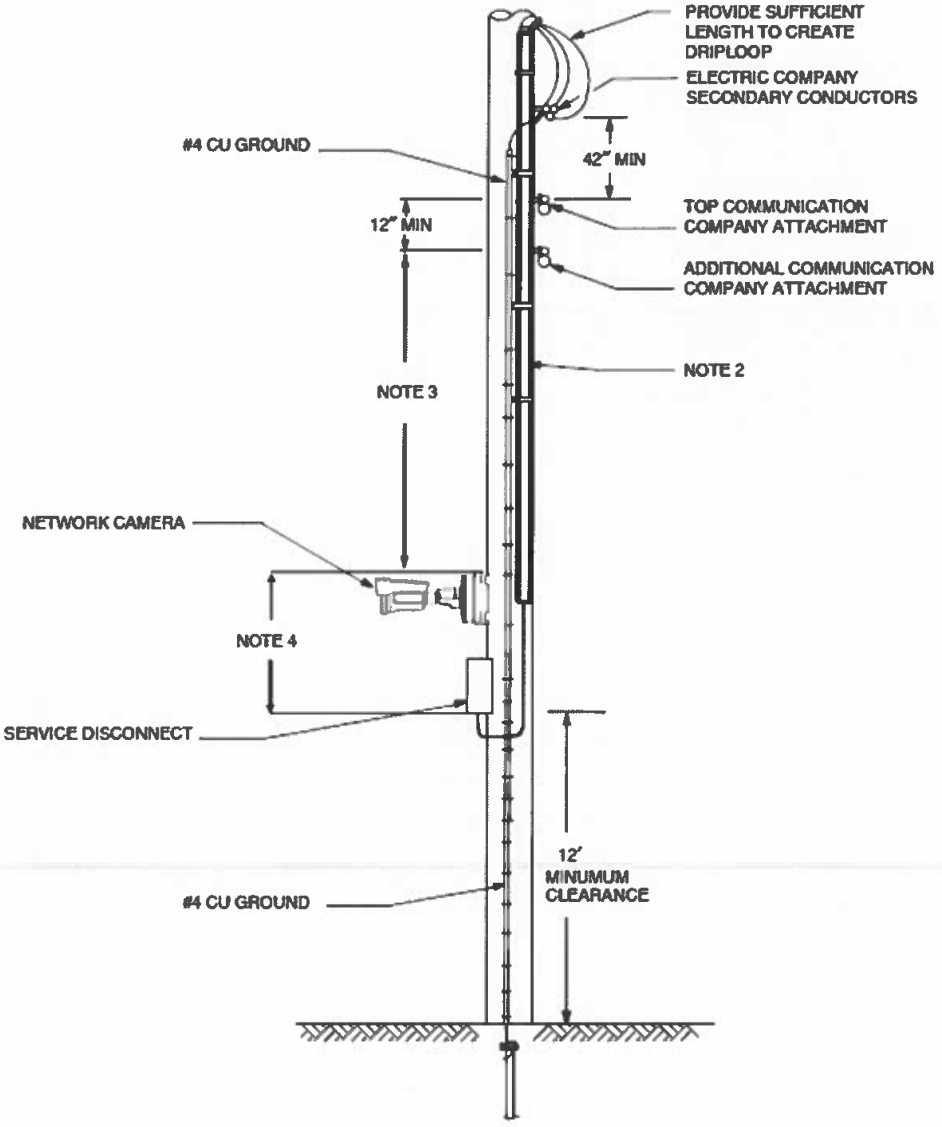

Pole Installation Detail Variation

Notes

1. Network Camera is to be installed on roadside.
2. Company power conductors in 2-inch PVC conduit system in accordance with National Electric Code requirements.
3. There must be a 12 inch minimum clearance between network camera and lowest communication attachment.
4. Attachment information and dimensions to be provided by customer.

Pole Mounted Service Equipment and Metering (Special Installation)

514. The Company does not allow pole mounted service equipment and metering.

515. For existing installations, if the Company determines the pole needs to be replaced, the Company will replace the pole . Shifting the existing customer owned service equipment to the new pole is the customer's responsibility and at the customer's expense

516 . Repairs and upgrades to existing customer owned service equipment mounted on a Company pole is not allowed . When repairs or an upgrade to customer equipment is necessary, the Customer shall install and shift the equipment to a pedestal service at the customer's expense

Permanent Built Meter Pedestal

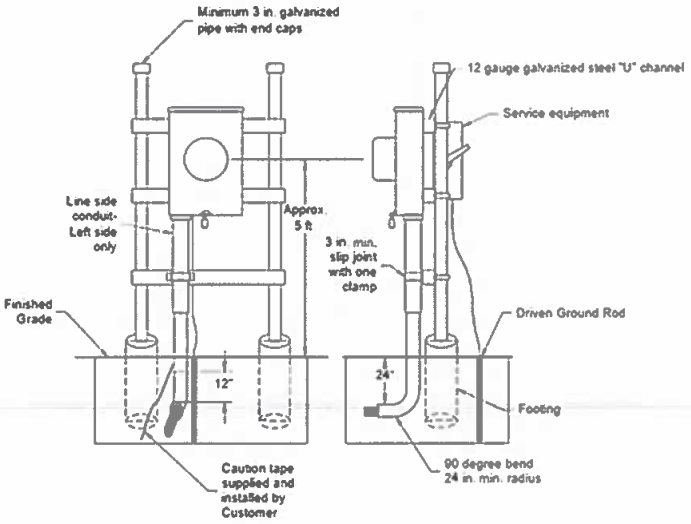

NOTES

1. Single phase 120/208 volt network, three phase 208Y/120 volt network, and three phase 480Y/277 volt services shall be cold sequenced
2. Company shall provide service conductors to line side of meter socket
3. Customer shall provide, own, and maintain approved conduit, load side conductors from the meter, and main disconnect.
4. Customer shall install 3 inch minimum schedule 40 PVC conduit for service conductors
5. Customer provided caution tape shall be red plastic with black lettering. The warning message on the red plastic caution tape shall read: CAUTION – ELECTRICAL LINE BURIED BELOW
6. Footing shall be a minimum of 8 inches in diameter with a depth no less than 4 feet, filled with concrete from bottom of hole to just above finish grade

Permanent Manufactured Meter Pedestal

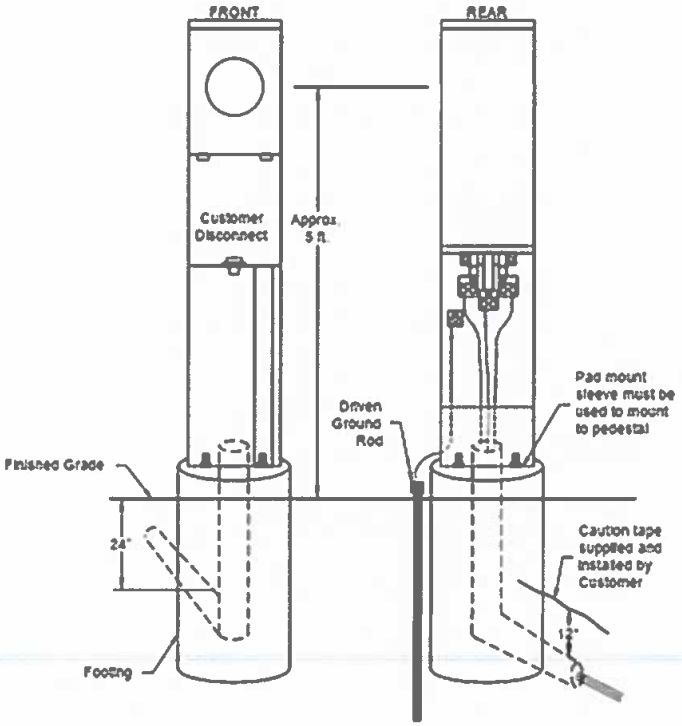

NOTES

1. This applies to single phase 120/240 volt services only.
2. Refer to approved meter socket list located at eversource.com.
3. Company shall provide service conductors to line side of meter socket.
4. Customer shall provide, own, and maintain approved conduit, load side conductors from the meter, and main disconnect.
5. Customer shall install 3 inch minimum schedule 40 PVC conduit.
6. The footing shall be a minimum of 8 inches in diameter with a depth no less than 4 feet, filled with concrete from bottom of hole to just above finish grade.
7. Customer provided caution tape shall be red plastic with black lettering. The warning message on the red plastic caution tape shall read: CAUTION – ELECTRICAL LINE BURIED BELOW.

EXHIBIT G

List of Poles on Which Licensee Can Install Municipal Devices

[INSERT THE POLE NUMBER AND STREET NAME OF EACH LOCATION]

EXHIBIT H

PURA-Approved Caps on Non-Municipal Unauthorized Attachment Fees and Non-Conforming Construction/Shifting Fees

For poles that are jointly owned by CL&P and a telephone company, CL&P will charge 50% of its approved rate. DN 09-12-05, CL&P Rate Case Decision, p. 127.

Unauthorized Attachments

1. The mediators believe that the unauthorized penalty cap should be the current annual pole attachment rate determined on a monthly basis and charged for each month of the unauthorized attachment going back to the last pole audit or up to 60 months, whichever time period is shorter. Another way of stating the penalty cap is: for the purpose of determining the penalty, the unauthorized attachment shall be treated as having existed for a period of five (5) years or since the last audit whichever period shall be the shorter; and the fee for any such period shall be calculated at the current attachment rate.

2. The unauthorized pole attachment penalty applies to a 100% CL&P owned pole. Unauthorized pole attachments on jointly owned poles would be charged 50% of each utilities approved unauthorized pole attachment penalty fee.

3. Examples for 100% CL&P owned poles:

   Example 1
   CATV Attachment Rate $13.15/year
   10 Unauthorized Attachments installed for 40 months
   Penalty = 10 attachments x $13.15/12 months x 40 months = $438.33

   Example 2
   CATV Attachment Rate $13.15/year
   10 Unauthorized Attachments installed for 70 months
   Penalty capped at 60 months
   Penalty = 10 attachments x $13.15/12 months x 60 months = $657.50

   Example 3
   Telcom Attachment Rate $16.92/year
   10 Unauthorized Attachments installed for 40 months
   Penalty = 10 attachments x $16.92/12 months x 40 months = $564

   Example 4
   Telcom Attachment Rate $16.92/year
   10 Unauthorized Attachments installed for 70 months
   Penalty capped at 60 months
   Penalty = 10 attachments x $16.92/12 months x 60 months = $846

4. For joint owned poles, CL&P would charge 50% of the above penalties

Failure to Complete Make Ready Work On Time

5. The penalty should be the annual attachment rate divided by 12, charged on a per day basis and capped at 30 days.

6. After 15 days of delay and penalties the pole owner should hire a contractor to construct the make ready work and charge the delaying attacher the penalty and costs of the make ready work.

7. Examples for 100% CL&P owned poles:

   Example 5
   CATV Attachment Rate $13.15/year
   10 Attachments Delayed for 20 days
   Penalty = 10 attachments x $13.15/12 x 20 days = $219.17

   Example 6
   CATV Attachment Rate $13.15/year
   10 Attachments Delayed for 40 days
   Penalty capped at 30 days
   Penalty = 10 attachments x $13.15/12 x 30 days = $328.75

   Minimum CATV Cap: Greater of $110 or total of pole owners' costs.

   Example 7
   Telcom Attachment Rate $16.92/year
   10 Attachments Delayed for 20 days
   Penalty = 10 attachments x $16.92/12 x 40 months = $282

   Example 8
   Telcom Attachment Rate $16.92/year
   10 Attachments Delayed for 40 days
   Penalty capped at 30 days
   Penalty = 10 attachments x $16.92/12 x 30 days = $423

   Minimum CATV Cap: Greater of $140 or total of pole owners' costs.

8. The Mediator believes that the make-ready timeliness penalty should be allocated between the pole owner and the 3rd party customer being harmed.

9. The pole owner should be allowed to recover its cost for additional administration and follow-up work and time so utility customers do not subsidize additional costs due to delays.

10. The remainder of the penalty revenue should go to the customer who experienced the delay.

11. The penalty charged to third parties and municipalities should be the same.

12. Pole owner customers will not subsidize 3rd party attachment costs.

13. The mediation team is available to assists with any disputes that may rise from this proposal.

14. The results of the cap proposal will be reviewed after 12 months of use.

15. Note: The penalty caps used by AT&T in the past will remain the same and are not affected by this proposal