EVERSOURCE

# Technical Interconnection and Interoperability Requirements for Distributed Energy Resources (DERs)

Aug. 22nd,2025

**Table of Contents**

**Introduction and Scope**

# Contents

1 INTRODUCTION AND SCOPE ..... - 4 -
2 GENERAL REQUIREMENTS ..... - 6 -
2.1 Documents and Standards ..... - 6 -
2.2 Safe Operation and Maintenance ..... - 7 -
2.3 Facility Isolation ..... - 7 -
2.4 Access ..... - 7 -
2.5 Future System Changes and Responsibilities ..... - 7 -
2.6 DER SCADA Visibility & Control Requirements ..... - 8 -
2.6.1 DER Gateway to Power Plant Controller (PPC) Design ..... - 8 -
2.7 Point of Interconnection (POI) Reclosers ..... - 8 -
2.8 Interconnection Requirements based on DER size and Site Conditions ..... - 9 -
3 General Design Requirements ..... - 10 -
3.1 Interconnection Transformer Winding and Grounding Considerations ..... - 10 -
3.2 Power Quality Requirements ..... - 10 -
3.3 Voltage Regulation and Power Factor ..... - 10 -
3.4 Transformer Reverse Power Capability ..... - 11 -
3.5 Dispatch Limiting Schedule ..... - 12 -
3.6 Insulation Coordination ..... - 13 -
3.7 BIL (Basic Impulse Insulation Level) ..... - 13 -
3.8 Arc Flash ..... - 13 -
3.9 DER Facility Capacity ..... - 13 -
3.10 Design Changes or Additions ..... - 14 -
3.11 Utility Accessible Disconnect Switch ..... - 14 -
3.12 Adverse Impact of Unintentional Islanding ..... - 15 -
3.13 Transient Overvoltage (TOV) ..... - 15 -
3.14 Fault Interrupting Devices ..... - 15 -
3.15 Service Requirements ..... - 15 -

3.16 Clearances ..... - 16 -
3.17 Rights of Way (ROW) ..... - 16 -
3.17.1 Distribution and Transmission ROW's ..... - 16 -
3.17.2 Wind Turbine Setback from Distribution and Transmission ROW's ..... - 16 -
3.18 Communication Protocol ..... - 16 -
3.19 Communication Medium Evaluation ..... - 17 -
4 Protection and Control Requirements ..... - 18 -
4.1 Classifications of Interconnections ..... - 18 -
4.1.1 Purely Exporting ..... - 18 -
4.1.2 Behind the Meter Exporting ..... - 20 -
4.1.3 Behind the Meter Non-Exporting ..... - 22 -
4.2 Protection Requirements per Technology Size and Type ..... - 22 -
4.2.1 Inverter Based DERs less than 500kW: ..... - 22 -
4.2.2 Inverter Based DERs 500 kW or greater: ..... - 23 -
4.2.3 Asynchronous (Induction') DGs under 300kW ..... - 23 -
4.2.4 Asynchronous (Induction) DGs, 300kW or greater or Synchronous of any size: ..... - 23 -
4.3 Synchronizing Devices ..... - 24 -
4.4 Utility Grade Relay Equipment ..... - 24 -
4.5 Control Power ..... - 25 -
4.6 Current Transformers ..... - 25 -
4.7 Voltage Transformers ..... - 26 -
4.8 Transfer Trip Schemes ..... - 26 -
4.9 Generator Step-Up (GSU) Transformer Configurations ..... - 26 -
4.10 Grounding and Bonding ..... - 26 -
4.11 Closed Transition Emergency (Stand-by) Generator ("EG") ..... - 28 -
4.11.1 Momentary Parallel ..... - 28 -
4.12 Open Transition Emergency (or Stand-by) Generator (EG) ..... - 29 -
5 Networks ..... - 29 -
5.1 Spot Networks ..... - 29 -
5.2 Area Networks ..... - 30 -
6 Testing and Maintenance Requirements ..... - 30 -
6.1 Witnessing of Commissioning Test ..... - 30 -

6.2 Periodic Testing ..... - 31 -

6.3 Safe Operations and Maintenance ..... - 32 -

# 1 INTRODUCTION AND SCOPE

The purpose of this document is to provide information and to familiarize Customers, distributed energy resource owners, architects, engineers, contractors, operator's and developers with the standards and policies associated with the interconnection of Distributed Energy Resources ("DER") including but not limited to Distributed Generation (DG) resources to the Eversource Energy ("Company") Electric Power Systems ("EPS").[1] This document provides requirements relative to the safety, performance, reliability, operation, design, protection, testing and maintenance of the DER's interconnecting facility.

NOTE: Please note that this document is a guide, and the Company reserves the right to change its policies, procedures and standards when deemed necessary to maintain the reliability of the EPS and the safety of the Company's customers, workforce and general public.

Eversource has established administrative processes for interconnecting all types and sizes of DER. As the level of customer and developer interest advances beyond the initial inquiry phase, a formal review process takes place in which the potential impact of a given site on the Eversource EPS is reviewed. This review may include the execution of formal study agreements and may result in general and specific requirements for certain design aspects of the DER. These requirements typically include electrical protection and control design and configuration, interface transformer configuration, required modifications to local Eversource facilities, metering and supervisory control and data acquisition ("SCADA") requirements, and in some cases operating constraints for the proposed DER. The information contained within this document is intended to help parties contemplating interconnection of a DER to better understand the general nature and extent of typical Eversource requirements for an interconnection of various type and electrical size.

NOTE: Please note that no attempt has been made to identify all potential Eversource requirements for each possible type of DER source, technology, size and/or configuration.

NOTE: Eversource metering and SCADA requirements are not included in this document, other than by reference.

NOTE: The information contained in this document is not a design manual nor is it to be a substitute for responsible engineering practice.

The information and requirements contained in this document are in no way a substitute for the formal interconnection process, engineering impact studies and reports which may be required for a given site, nor shall they supersede other Company standards or provisions. The Company will be able to advise DER owners during review of their application as to whether studies will be required. Where such a study is required, materials purchased and engineering performed to

address Company requirements must be based on the details contained within the study report or related correspondence. Any commitments which are made by a DER owner are made entirely at the DER owner's risk.

[1] *The following Companies are doing business as Eversource Energy: NSTAR Electric Company ("NSTAR"), Western Massachusetts Electric Company ("WMECO"), The Connecticut Light and Power Company ("CL&P"), and Public Service of New Hampshire ("PSNH").*

# 2 GENERAL REQUIREMENTS

## 2.1 Documents and Standards

Any DER owner seeking to interconnect a DER to the Company EPS or modify an existing DER must meet the requirements and specifications set forth in this document and any other requirements which may be imposed by the Company or by ISO-NE, including without limitation:

**For Massachusetts:**

- Eversource distributed generation interconnection tariffs
- Massachusetts TSRG common technical standards manual

**For New Hampshire:**

- Eversource guidelines for generator interconnections
- Eversource interconnection standards for inverters
- New Hampshire Code of Administrative Rules

**For Connecticut:**

- Eversource and The United Illuminating guidelines for generator interconnection
- Eversource and The United Illuminating guidelines for the interconnection of residential inverter-based generators 25 kW or less

In addition, the following should be adhered to as applicable:

- The latest approved version of the IEEE 1547 (Standard for Interconnecting Distributed Resources with Electric Power Systems) adopted by Eversource
- The latest approved version of the IEEE 1547.1 (Standard Conformance Test Procedures for Equipment Interconnecting Distributed Energy Resources with Electric Power Systems and Associated Interfaces) adopted by Eversource
- Latest approved version of UL (Underwriters Laboratories) 1741 (Inverters, Converters, Controllers, and Interconnection System Equipment for use with Distributed Energy Resources).
- The latest approved version of Inverter Source Requirement Document of ISO New England (ISO-NE) adopted by Eversource.
- DER project sponsors should be familiar with all applicable ISO-NE policies and procedures, including:
    - Operating Procedure No. 14 – Technical Requirements for Generators, Demand Resources, Asset Related Demands and Alternative Technology Regulation Resources
    - Operating Procedure No. 18 – Metering and Telemetering Criteria

- ISO-NE Planning Procedure 5-1 – Procedure for Review of Governance Participant's Proposed Plans (Section I.3.9 Applications: Requirements, Procedures, and Forms), and
- ISO-NE Planning Procedure 5-3 – Guidelines for Conducting and Evaluating Proposed Plan Application Analyses.

## 2.2 Safe Operation and Maintenance

The DER owner shall operate and maintain the DER in accordance with the applicable manufacturer's recommended maintenance schedule, and in compliance with all aspects of the Company's Interconnection Tariff or agreements, as applicable. The DER owner must keep maintenance records that the Company may request from time to time for review.

The DER owner shall continue to comply with all applicable laws and requirements after an interconnection has occurred. In the event the Company has reason to believe that the DER installation may be the source of problems on the Company EPS, the Company has the right to install monitoring equipment at a mutually agreed upon location to determine the source of the problems. If the DER is determined to be the source of the problems, the Company may require disconnection as outlined in the Interconnection Tariff or agreement, as applicable.

## 2.3 Facility Isolation

The Company may, without notice, deem it necessary to isolate a DER from the EPS. This may be due to abnormal system configurations, emergency repairs, maintenance, or adverse impact cause by the generator. This disconnection may be done locally at the required lockable disconnect switch or remotely using an Eversource device.

## 2.4 Access

Both the Company and the DER shall each provide to the other and update a telephone number that can always be used to allow either Party to report an emergency.

The owner of the land ("Landowner") on which the Company's equipment or facilities are in instances where the DER owner and electric customer are not the owner of such land shall allow the Company access to the Company's equipment by the applicable Interconnection Tariff or agreement.

## 2.5 Future System Changes and Responsibilities

The EPS is dynamic and must be able to accommodate future load growth and system changes. Therefore, the Company may, at its discretion and cost, make upgrades to the EPS. Such upgrades may have an impact on existing DER facilities. To ensure continued safe operations, DER facility Interconnection Agreements may need to be revised in accordance with the upgraded EPS.

The DER owner and the Company will work together and cooperatively to implement the appropriate changes, upgrades, etc. to attain the common goal of continued safe and reliable operation of the interconnection of the DER to the EPS.

## 2.6 DER SCADA Visibility & Control Requirements

As DER penetration has increased throughout the distribution system, it has posed significant challenges to system safety, reliability and stability. In areas that are heavily saturated with DER, the ability to monitor and control these devices can help electric distribution companies prepare for and address impacts of high penetration and ensure safe and reliable operation of the EPS.

Below are some of the technologies that help facilitate monitoring and control of DER through SCADA devices:

### 2.6.1 DER Gateway to Power Plant Controller (PPC) Design

When monitoring and operating customer equipment is required, all configurations and communications shall be designed based on a DER Gateway to PPC design. This configuration requires:

- **Eversource DER Gateway** – This device will be installed at the point of interconnection on the Eversource side and will be used to transfer data between the Eversource SCADA System and the Customer PPC. This device will have the capability to provide indication, telemetry, and control.
- **Customer PPC** – This device will be installed and maintained by the Customer and will provide the indication, telemetry, and control of the DER to the Eversource DER Gateway.

  There are scenarios where the RTAC design could be called for without a POI recloser. Eversource still requires a Utility Accessible Disconnect Switch (UADS) to be installed on site.

## 2.7 Point of Interconnection (POI) Reclosers

All POI recloser installations will be programmed for Eversource circuit protection only. It is not intended to provide protection for customer owned equipment. The intention of a POI Recloser is to isolate the Customer from the Eversource system for the following conditions:

a. Faults between the POI Recloser and the first customer owned fault interrupting device.

b. Power flows into the Eversource system from the customer bus. Power flow could be sourced by a customer-owned generator.

c. Faults not adequately cleared by the customer's fault interrupting devices. In the event of customer equipment failing to operate, the POI recloser will act as a failsafe for the Eversource system.

Overcurrent based fault protection settings will be coordinated against the Eversource system regarding customer load. Coordination with customer owned protection will be attempted but cannot be guaranteed. Reverse power and reverse current protection settings will be utilized to detect current flowing from the customer bus into the Eversource system. Time delays settings for these conditions will be set by Protection & Control Engineering. Reverse power will be used to detect load flow from the customer bus. Reverse current will be used to detect current flowing from the customer bus to a fault on the Eversource system.

## 2.8 Interconnection Requirements based on DER size and Site Conditions

DERs Less Than 500 kW

Certified and non−certified DER less than 500 kW generally do not require DSCADA visibility for standalone facilities and behind−the−meter facilities. However, on a case−by−case basis, Eversource reserves the right to require DSCADA visibility as required.

DERs Greater Than or Equal to 500 kW and Less Than 5 MW

DER facilities between 500 kW and 5 MW require SCADA monitoring, and control is implemented in the interconnection design. Eversource requires a Customer PPC to enable SCADA control.

Eversource requires a POI recloser to provide coordinated fault protection, reverse power automatic isolation and as a failsafe interrupting device in the event SCADA controls fail to isolate all DER sources.

DER Greater Than or Equal to 5 MW

DER facilities greater than or equal to 5 MW require that SCADA monitoring, and control is implemented in the interconnection design. Eversource requires a Customer PPC for SCADA control. In addition, the DER will be subject to ISO New England Interconnection procedures for monitoring via an RTU.

Behind-The-Meter Facilities

Special consideration should be given to large load customers who have DER facilities equal to or greater than 500 kW. For these applications, a DSCADA RTAC is required and will be configured to disconnect the connected DER facility only. Eversource may require a POI recloser to provide coordinated fault protection, reverse power automatic isolation and a failsafe interrupting device if DSCADA controls fail to isolate all DER sources.

# 3 General Design Requirements

## 3.1 Interconnection Transformer Winding and Grounding Considerations

In order to provide maximum operating flexibility for the DER and to minimize possible adverse effects on the facilities of other Eversource customers, the DER shall provide, at its sole cost and expense, an interconnection transformer between the DER facility and the Company-owned equipment, unless this requirement is waived by the Company in its sole discretion. When required, the DER owner shall propose to the Company an interconnection transformer and grounding configuration (if required), which shall be subject to the approval of the Company at its sole discretion. The final winding connection and grounding configuration is subject to the approval of the Company at its sole discretion. See also Section 2.8 (Grounding and Bonding) and Section 3.4 (GSU Transformer Configurations).

## 3.2 Power Quality Requirements

All DER facilities shall comply with the power quality requirements in the latest version of IEEE 1547.

The DER shall not cause voltage step or ramp change at the POI exceeding 3% at medium distribution voltages per IEEE 1547-2018 clause 7.2.2. Eversource also requires that the maximum Rapid Voltage Change (RVC) shall not exceed the values listed below, unless the Company establishes alternate limits in special situations that include, but are not limited to, tap changer and capacitor operation, and the type and number of customers on the circuit.

Simultaneous output changes on other DER sites on the circuit may be considered for the analysis if they are the same type, since a common event could affect more than one site. If the circuit occupies a large geographic area, the Company may determine volatility of DER output.

Harmonic current injection into the EPS at the Point of Common Coupling (“PCC”) shall be consistent with limits established by IEEE 519 and IEEE 1547.

The interconnection of the DER facility shall not increase the potential for Ferroresonance in the EPS.

The interconnection of the DER facility shall not cause temporary under voltages or over-voltages as determined by the Company when studying the proposed interconnection.

## 3.3 Voltage Regulation and Power Factor

The DER facility shall not: (i) actively regulate the voltage of the EPS unless specifically agreed by the Company; (ii) cause the voltage at any point along the EPS to deviate from the voltage range defined in the regulatory requirements for each State. of nominal or (iii) cause any voltage

deviations, which are objectionable to other customers of the Company as determined by the Company when studying the proposed interconnection.

A DER owner may be required to install equipment that can be set to operate at a power factor between 0.90 lagging (Vars to the Company EPS) and 0.90 leading (Vars from the Company EPS). All DERs greater than 1 MW connecting to the Eversource distribution system are required to have capability to operate in Volt-Var control mode per the latest version of IEEE 1547.

The Company regulates the voltage on the EPS by employing load tap changing transformers, line voltage regulators and/or capacitors. Upgrades to these facilities may require system modifications resulting from DER interconnection.

## 3.4 Transformer Reverse Power Capability

Any proposed DER facility that has the potential to cause reverse power flow through an Eversource substation transformer may require an Impact Study. The Impact Study will specifically address the ability of the transformer to accommodate reverse power flow. The following items will be evaluated:

System Voltage Control: The Impact Study shall determine if system voltage control can be maintained at various boundary conditions and will evaluate excessive load tap changer ("LTC") operation caused by intermittent DER sources.

LTC Design, Controller Type and Controller Settings: The Impact Study will evaluate the capability of LTC and controller to accommodate reverse power conditions and to respond with appropriate control strategies.

Voltage and current inputs must be available to the LTC controller.

Any LTC controller that is not appropriate for reverse power must be replaced with a suitable controller with both voltage and current inputs. The requirement to add a backup controller will also be evaluated. LTC upgrades may require system modifications resulting from a DER facility interconnection.

Controller settings will be determined on case-by-case analysis of DER type and penetration.

Capacity Limit: Unless constrained by other more limiting requirements, aggregate DER (in kVA) will be permitted up to 95% of the transformer's top nameplate ampere rating (in kVA) with maximum cooling operational. The minimum forward loading of the transformer shall be considered for the assessment.

Reverse power flow that will significantly add to the transformer insulation loss of life on a routine basis, based on the transformer specification and the insulation aging description in the

latest version of IEEE Std. C57.91, will be evaluated. Any required transformer upgrades will be included in the system modifications section of the impact study that are required before interconnecting the DER facility.

DER facilities must supply a balanced three-phase output such that there would never be a situation where a substation transformer could experience forward power flow on one or more phases while experiencing reverse power flow on the other phase(s).

As a part of the Impact Study process, projects will be reviewed on a case-by-case basis to determine if additional relays or other protection devices will be required. Any required protection devices will be included in system modifications required to interconnect the DER facility.

## 3.5 Dispatch Limiting Schedule

The DER Dispatch Limiting Schedule is calculated during technical review and provides maximum operating capabilities for both charging and discharging activity of the DER based on type. The following provides the format for schedule that DERs ≥ 500 kW are required to follow. Charge Limiting Schedule (CLS) and Discharge Limiting Schedule (DLS) refer to importing from and exporting to the grid in all cases respectively.

| **Discharge Limiting Schedule (DLS)** | **07:00 - 12:00** | **12:00 - 15:00** | **15:00 - 19:00** | **19:00 - 07:00** |
|---|---|---|---|---|
| **Spring** | % | % | % | % |
| **Summer** | % | % | % | % |
| **Fall** | % | % | % | % |
| **Winter** | % | % | % | % |
| **Charge Limiting Schedule (CLS)** | **06:00 - 11:00** | **11:00 - 15:00** | **15:00 - 22:00** | **22:00 - 06:00** |
| **Spring** | % | % | % | % |
| **Summer** | % | % | % | % |
| **Fall** | % | % | % | % |
| **Winter** | % | % | % | % |

The Seasons are defined as follows:

- Spring: March, April, May
- Summer: June, July, Aug
- Fall: Sept, Oct
- Winter: Nov, Dec, Jan, Feb

## 3.6 Insulation Coordination

The DER facility connected to the EPS (even in closed transition mode) must be able to withstand the normal steady state and abnormal transient voltages that can be experienced on the EPS. Lightning and switching of equipment are two common sources of high abnormal voltage transients. The DER shall be responsible for procuring equipment with a level of insulation and fault withstand capability compatible with the grounding method specified below.

## 3.7 BIL (Basic Impulse Insulation Level)

Equipment connected to the EPS must be designed with a certain minimum Basic Impulse Insulation Level ("BIL"). BIL, in general terms, is a measure of the ability of a piece of equipment to withstand normal and abnormal voltages.

The DER shall ensure that the BIL of all the installed equipment meets the applicable standards set forth above, as well as applicable UL, ANSI and IEEE standards. Furthermore, such equipment shall be installed in compliance with all applicable local, state and federal codes.

## 3.8 Arc Flash

The interconnection of a DER facility to the EPS shall not increase available fault current and associated arc flash energy to a level where Company workers would have to use the next level of enhanced Personal Protective Equipment ("PPE") and/or restrictive work methods above and beyond what the workers would normally use for work at the same location without the DER facility present. System modifications to address unacceptable increase in arc flash energy levels will be addressed in the Impact Study on a case-by-case basis.

## 3.9 DER Facility Capacity

The DER facility size is determined by the total aggregate maximum AC output of all DERs as specified on the individual DER equipment specifications ("cut sheet") and the export/import limitations clearly defined on the one-line.

## 3.10 Design Changes or Additions

Contact the Company prior to designing any changes to existing interconnected DER facilities. Express authorization by the Company is required for the interconnection of any DER. Once a design is approved for interconnection, no changes may be made without a subsequent approval by the Company of those changes. Failure to notify the Company of changes to approved designs may result in disconnection of the DER. The document describing steps to make the design changes and their impact can be found on Eversource website (https://www.eversource.com/content/docs/default-source/builders-contractors/inverter-design-changes-table.pdf?sfvrsn=496ad09f_3)

## 3.11 Utility Accessible Disconnect Switch

The Company shall require a utility accessible disconnect switch (UADS), or comparable device agreed to by Company, at the PCC or at another mutually agreeable point that is accessible to Company personnel at all hours of every day and that can be opened for isolation if required. The Company shall have access to the DER isolation device. Any DER-owned isolating device should be located within ten feet and visible sight of the revenue meter or at another mutually agreeable point that is accessible to Eversource personnel at all hours of all days. The device must have proper placards and signage indicating that it is for the DER facility. Signage must be of a permanent nature. Use UV stable materials and adhesive, suitable for outdoor environmental life cycle.

The Company shall have the right to open this UADS in accordance with any Interconnection Tariff or agreements as applicable.

An externally accessible UADS is required for all DERs unless waived due to State requirements or extenuating circumstances, as determined on a case-by-case basis.

The Company requirements and specifications for an UADS are as follows. A UADS shall:

- Be gang operated
- Have a visible break when open
- Be rated to interrupt the maximum DER facility output
- Be capable of being locked open
- Be easily accessible to Company personnel at all times

In NH, the state requirement is set by PUC 905.01, which does not allow the utility to require a UADS for generators less than 10 kW, unless specific conditions are not met by the interconnecting DER.

In CT, certified inverter generators less than or equal to 1 kW are exempt from the UADS requirement.

## 3.12 Adverse Impact of Unintentional Islanding

Unintentional Islanding by the DER of all or part of the EPS (meaning a part of the EPS is kept energized by the generating facility after the area has been de-energized) is prohibited as it may result in unsafe conditions on the EPS.

Eversource performs risk of islanding (ROI) screening during initial review based on the SANDIA suggested Guidelines for anti-Islanding screening.

An EMT ROI study is required to further assess the ROI when a project fails the applicable screens. To pass an ROI study, generator must trip within two (2) seconds of a loss of source event to meet the IEEE 1547-2018 Section 8.1 requirements. If a violation is detected after the dynamic study completion, mitigations such as DTT will be required.

## 3.13 Transient Overvoltage (TOV)

Transient overvoltage is of concern due to potential load rejection overvoltage (LROV) by inverter-based DER. There is concern that during step changes in load (such as tripping of an upstream device), the proposed inverters may cause transient over voltages in excess of 1.2pu, which can potentially cause damage to the customer's equipment, utility equipment, and/or nearby customer equipment. Due to this concern, Eversource requires that the customer demonstrate that the inverters limit their cumulative overvoltage according to the transient overvoltage curve in IEEE Std. 1547-2018 clause 7.4.2.

If the EMT study is required and analysis determines that a TOV condition is caused by the DER, mitigation or combination of mitigations, such as, but not limited to, Self-Protection Overvoltage (SPOV) enabling in the inverter, revising grounding system, and Surge Arrestors at POI or substation, may be required. The analysis shall also screen for pre-existing transient overvoltage issues.

NOTE: Please note that compliance with IEEE Std. 1547-2018 cannot guarantee that the transient analysis is not required.

## 3.14 Fault Interrupting Devices

The DER owner shall install an interrupting device that has the capability to safely isolate the DER from the Company's EPS. This device shall be capable of interrupting the full nameplate fault current of the DER system with consideration of X/R ratio including all AC and DC offsets at that point in the system. Such device may be subject to approval by the Company, but such approval will be limited to the suitability of protecting the Company's EPS.

## 3.15 Service Requirements

All DER interconnections must be consistent with each State's applicable Information and Requirements for Electric Supply. These documents are available at www.eversource.com.

## 3.16 Clearances

If installing solar panels on the roof of a building, then the DER solar Facility must maintain a minimum of three feet from the service point of attachment and service must.

## 3.17 Rights of Way (ROW)

### 3.17.1 Distribution and Transmission ROW's

Customers are not permitted to install equipment in Distribution or Transmission Rights of Way (ROW). Please contact Eversource prior to designing a project near a ROW. Please note that if your project requires you to access a ROW (such as by vehicle), you will be required to pay for a study to determine proper access to the site and modifications required for safe access and clearances. Services and equipment cannot be interconnected in or across a ROW.

### 3.17.2 Wind Turbine Setback from Distribution and Transmission ROW's

Each wind turbine proposed to be located near any Eversource Distribution or Transmission Right of Way (ROW) shall have a setback distance from the edge of the ROW that is the greater of the following: (1) a minimum of 1.5 times the wind turbine's maximum tip height (MTH)*; or (2) the minimum distance recommended by the applicable Ice Drop and Throw Evaluation Report during turbine operation; or (3) the minimum distance recommended by the wind turbine manufacturer for a turbine located in proximity to Eversource infrastructure on an ROW.

**Maximum Tip Height (MTH) is defined as the height of the wind turbine measured from natural grade to the tip of the rotor blade at its highest point.*

## 3.18 Communication Protocol

The new IEEE 1547-2018 standard specifies that "a DER shall have provisions for a local DER interface capable of communicating to support the information exchange requirements specified in this standard for all applicable functions that are supported in the DER". The standard requires communications such that the utility can send control commands and receive status and information back from the smart inverters. In section 10.1, IEEE 1547-2018 also specifically says that "the decision to use the local DER communication interface or to deploy a communication system shall be determined by the Area EPS operator". Eversource Energy, as the area electrical power system (EPS) operator, can specify which communication protocols to use from the list of the eligible protocols as specified in Table 41 of IEEE 1547-2018 or whether to require the use of DER communications interface.

Table 41 —List of eligible protocols

1. IEEE Std 2030.5 (SEP2) TCP/IP Ethernet
2. IEEE Std 1815 (DNP3) TCP/IP Ethernet
3. SunSpec Modbus TCP/IP Ethernet

## 3.19 Communication Medium Evaluation

Eversource will evaluate the system requirements to select the most reliable communication path for the interface with customer owned RTAC. The Eversource system has existing communication paths for the distribution system that will vary depending on location. The communication medium will be selected based on the existing infrastructure and the goal will be to integrate the new devices into the existing network and only interconnect the new devices into the network. The communication medium to be used is listed below and will take priority in the order listed.

1. **Fiber**

   The use of optic fiber is highly recommended in those cases where there is a previous installation and fiber is already available. While the cost of fiber installation and maintenance is high in comparison to Cellular or Radio, the design team will evaluate the application requirements and use fiber optic only if it is strictly required.

2. **Radio**

   This method is one of the Eversource preferred methods since it is being currently used for the Distribution SCADA communication and has been a reliable solution and provides the advantage of having the infrastructure available and installed.

3. **Cellular**

   Cellular communication is being installed in implementation of DTT schemes and has offers a redundant communication path and reliable operation. The use of Cellular technology will be evaluated by Network Engineering, DSCADA and P&C teams to be used as the primary communication medium in DTT implementations.

Once a communication mean has been determined, the Customer will be responsible for all construction back to the point of interconnect.

**DNP3 is the Eversource Energy's specified communication protocol.**

Eversource Energy as the area EPS operator has established the following DER communications interface requirements:

1. Small to mid-size behind the meter residential and commercial systems with nameplate capacity of less than or equal to 500 kW have no specific requirements for DER communications interface currently.
2. Large DER systems with nameplate capacity greater than or equal to 500 kW are required to have and provide evidence of a DNP3 communications interface.

3. Emergency and standby DER systems are exempt as specified in 4.13 of IEEE 1547-2018 from the interoperability requirements specified in this standard.

# 4 Protection and Control Requirements

## 4.1 Classifications of Interconnections

### 4.1.1 Purely Exporting

A Purely Exporting Generator (figure 1) or stand-alone DER within the context of these requirements shall mean any DER that is installed with the purpose of providing power onto the Company EPS and has little or no on-site customer load. The PCC will be defined in an Agreement between the DER owner and the Company.

Under the context of this type of interconnection, the Company will regard the PCC Utility owned switch as the means to isolate the generator during times when the Company considers it unacceptable for parallel generation to operate.

The Company owned disconnecting device may be operated during off normal system configurations or any number of adverse conditions that may be brought to light in an Impact Study. This device may be operated manually, remotely or through the operation of a Company direct transfer trip scheme.

When deemed necessary, the DER owner shall install and maintain a protection and control system. The Company disconnecting device shall not be considered as part of the DER's protection scheme.

**Figure 1 – Purely Exporting Generator**

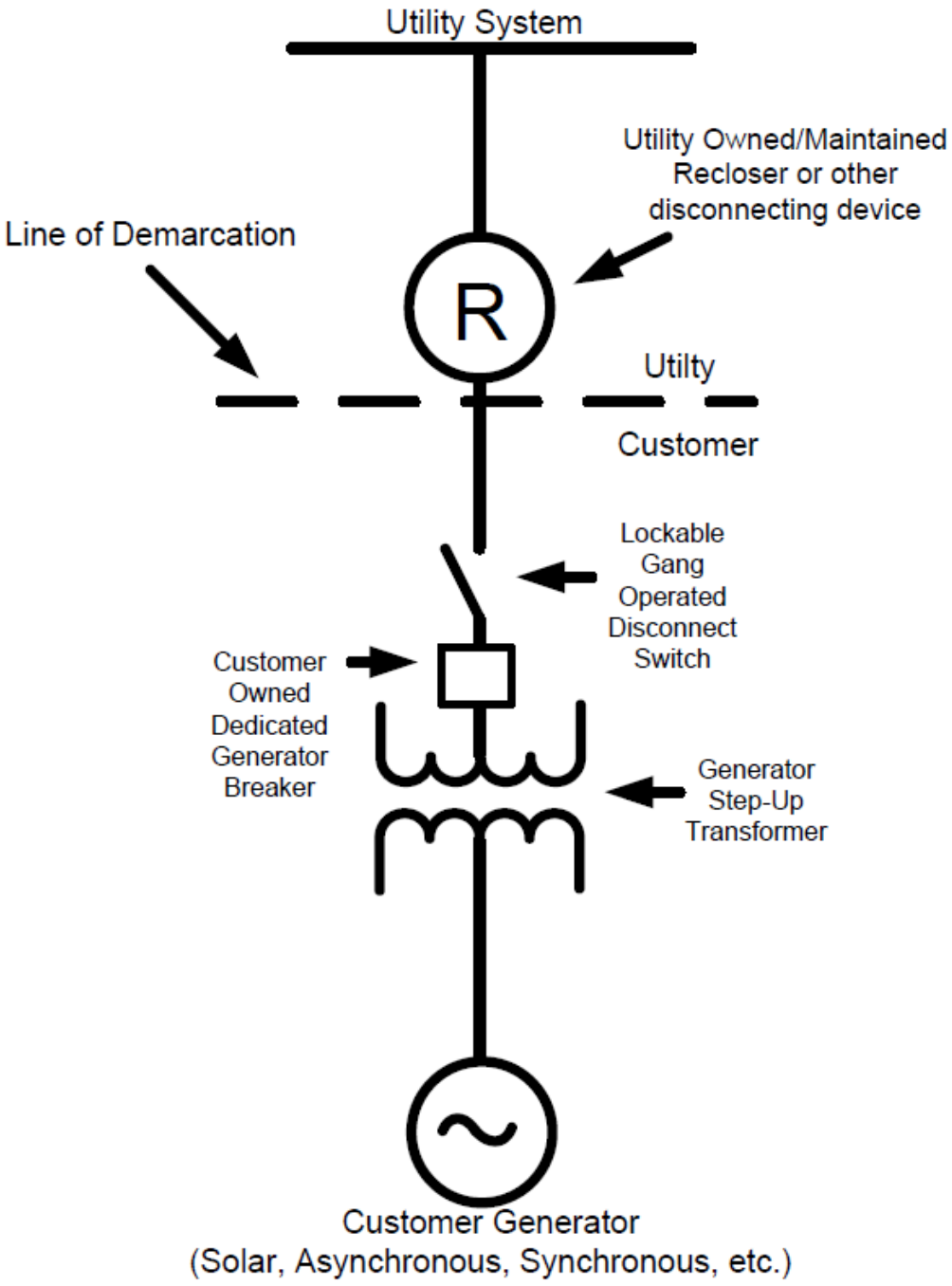

### 4.1.2 Behind the Meter Exporting

A Behind the Meter and Exporting Generator (refer to figure 2) within the context of these requirements shall be defined as any DER Facility that is installed with the purpose of providing power onto the Company EPS while there is also significant on-site customer load. For this type of installation, the Company will consider the PCC as the metering location, when the Company owns the transformer and cable up to that point. For primary metered customers, the same logic is applicable, but the PCC becomes the primary metered location per the PCC definition as defined in an agreement between the Company and the DER owner.

The Company owned disconnecting device at the PCC may not be required in this case because the Customer load is present and may not be easily isolated along with the generator when the generator is tripped offline. In these cases, when the Company requires the Facility be isolated from the EPS, it will be necessary for the Company to trip and block close a protection device to be specified by the Company which may be owned by the Company or the DER owner to disconnect the generator for the duration of that condition. The device may need to be operated during off normal system configurations or any number of adverse conditions the DER may cause on the Company EPS. This device may be operated manually, remotely or through the operation of a Company direct transfer trip scheme. This would require a communication interface between the Company and specified equipment.

**Figure 2 – Behind the Meter Generator Installation (Example Configuration)**

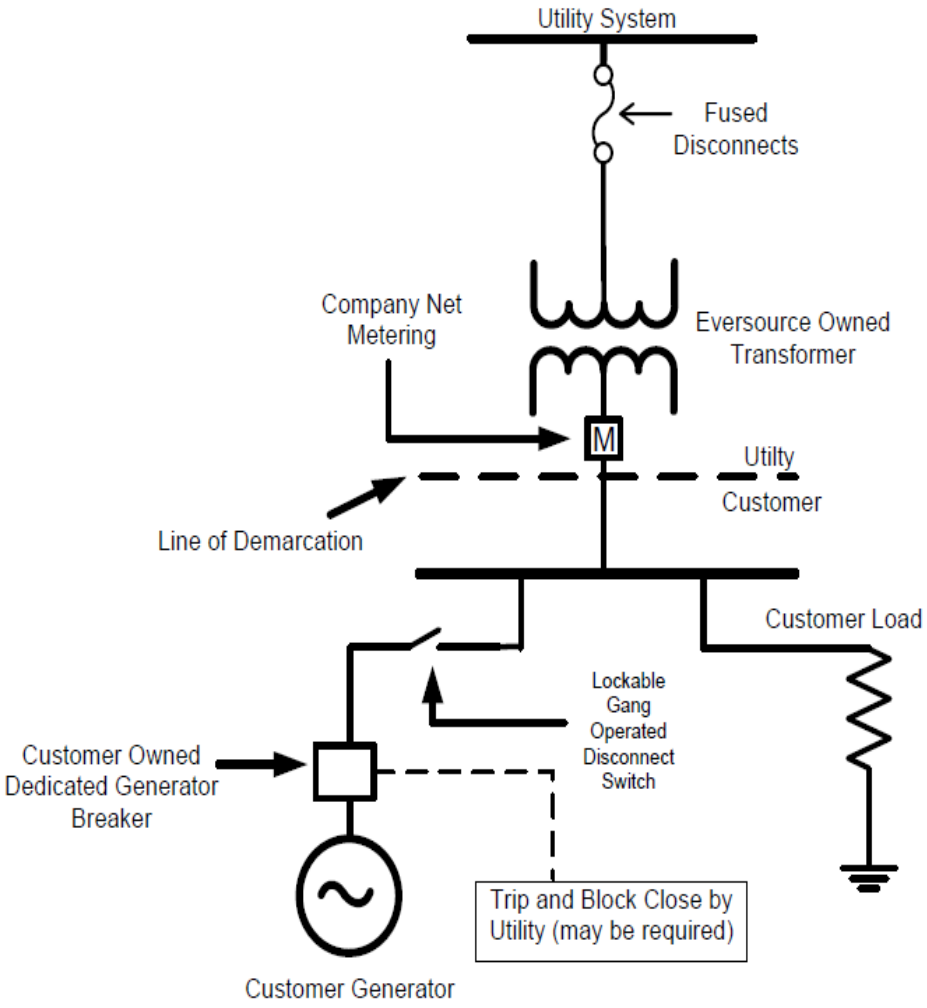

#### 4.1.3 Behind the Meter Non-Exporting

For Facilities connected in parallel with the Company EPS which are only intended to supplement onsite customer load (no power export to Company EPS) standard anti-Islanding protection in addition to minimum import protection shall be required. Minimum import protection (32 relay functionality) shall be set to trip a dedicated generator breaker and isolate the generator from the rest of the EPS any time power import at the metering location drops to 5% of the generator name plate MW value. For Facilities with multiple DERs in parallel on site, the 'DER name plate' value will be considered the cumulative sum of all DER name plates on site.

### 4.2 Protection Requirements per Technology Size and Type

Relay requirements will vary according to size and technology type. The designations below organize protection requirements according to these considerations. The Company reserves the right to amend any of the following requirements if deemed necessary.

Note – All DER interconnections shall also be required to have both Phase and Ground Overcurrent protection designed to isolate the generator from the Company EPS during any single/multiple phase(s)-to-ground, phase-to-phase, or three-phase faults on the Company EPS. Where applicable, the Company may require the DER owner to also coordinate their Facility's Overcurrent protection scheme with the Company's upstream system protection. In this case the Company shall provide the DER owner with the upstream relay settings. The Company may also require the DER owner to submit an applicable State Licensed Professional Engineer ("PE") Stamped coordination study of the Customer's facility to ensure coordination with the Company's upstream settings.

Inverter settings must be shown in a table on the applicable State PE stamped one-line diagram. When relays are required, relay settings must be shown in a table in definitive values on the applicable State PE stamped one line.

#### 4.2.1 Inverter Based DERs less than 500kW:

The DER's relay system shall consist of UL1741 listed inverters with 27, 59, 81U and 81O relay functionality. Relay contactors may be used as the disconnecting means. A Company owned/maintained isolation device at the PCC may be required however the final determination of need will be at the sole discretion of the Company.

Inverter based systems smaller than 500kW may be allowed to utilize the inverter contactor to isolate during over/under voltage and over/under frequency. However, isolation for inverter overcurrent may require fuses or a dedicated breaker if inverter contactors are not designed and rated to isolate during a nameplate fault current event.

The Company may require additional relay protection for systems 500 kW and smaller based on the Facility design, EPS and/or other factors determined during the review of the project. This is required when multiple inverters are installed.

#### 4.2.2 Inverter Based DERs 500 kW or greater:

The DER's relay system shall consist of UL1741 listed inverters and include one additional 'utility grade' relay (as defined by listed requirements in Appendix A) with 27, 59, 59N, 81U and 81O relay functionality. A Company owned/maintained isolation device may be required at the PCC

The Company may require additional relay protection based on the Facility design, EPS and/or other factors determined during the review of the project.

#### 4.2.3 Asynchronous (Induction') DGs under 300kW

The DER's relay system shall consist of at least one utility grade relay with 27, 59, 81U and 81O relay functionality. Induction DGs with built-in 'utility grade' relays with the functionality above may be adequate if UL1741 and IEEE1547 listed. A Company owned/maintained isolation device at the PCC may not be required; however, the final determination of need will be at the sole discretion of the Company.

In MA, for all induction generators greater than 1/15 of on-site minimum verifiable load that are not equipped with on-site capacitors or that are greater than 200 kW, and for all synchronous generators, protective relays utilized by the Facility shall be sufficiently redundant and functionally separate so as to provide adequate protection, consistent with Company practices and standards, upon the failure of any one component

#### 4.2.4 Asynchronous (Induction) DGs, 300kW or greater or Synchronous of any size:

The DER's relay system shall consist of at least two utility grade relays with 27, 59, 59N, 81U and 81O relay functionality. Induction DGs with built-in utility grade relays with the functionality above may be adequate for primary protection. A Company owned/maintained isolation device at the PCC may be required. In some cases, the Company isolation device may eliminate the redundant utility-grade relay requirement noted above.

In MA, for all synchronous generators, protective relays utilized by the Facility shall be sufficiently redundant and functionally separate to provide adequate protection, consistent with Company practices and standards, upon the failure of any one component.

## 4.3 Synchronizing Devices

The DER owner shall designate one or more synchronizing device(s) such as motorized breakers, contactor/breaker combinations, or a fused contactor (if mutually agreeable) to be used to connect the DER Facility to the EPS. This synchronizing device may be a device other than the interconnection interrupting device. The synchronizing device must be capable of interrupting the current produced when the generating Facility is connected out of phase with the EPS consistent with IEEE 1547-2018 Section 4.11.3.

All synchronizing will be done by the generator at the generating Facility. The generating Facility shall not be used to energize a de-energized Company circuit.

In-line breakers, contactors, or switches without synchronizing devices require electrical or mechanical interlocks to prevent out-of-phase closing with the EPS.

All synchronizing schemes used for interconnecting a generating Facility with the EPS must conform to the synchronizing requirements within the current version of IEEE 1547. Requirements for automatic synchronizing schemes are determined by the Company on a case-by-case basis.

Induction generators must be accelerated to “synchronous” speed prior to connection to the EPS to reduce the magnitude and duration of accelerating current and resulting voltage drop to Eversource customers to acceptable levels.

Synchronous generators may not use the “pull-in” method of synchronizing due to excessive voltage drops to Eversource customers.

## 4.4 Utility Grade Relay Equipment

All DER-owned and maintained relays installed as part of generator protection scheme (Anti-Islanding, Overcurrent, Reverse Power, etc.) shall be ‘Utility Grade’.

All devices utilized to supply Eversource-required protective functions must be equipped with provisions to aid in the post-mortem analysis of their operation. In the case of single-function protective elements, these provisions will include properly configured targets. In the case of the multifunction of numerical devices, these provisions will include properly configured event recording facilities as well as targets.

Dedicated relays must be reserved for Eversource required functions. These relays will provide no functions except for Eversource required functions.

Any “relay failure” contacts on Eversource-required protective devices shall be wired to (1) trip the site generation and (2) initiate an alarm when the contacts indicate relay malfunction.

All Eversource-required protective relays and auxiliary tripping relays must be equipped with test facilities which allow secondary quantity injection and input contact and output contact isolation while the protective relays remain in their cases.

All Eversource-required tripping and associated logic must be hard wired from protective relays to the interrupting device(s). Tripping and or/logic derived from programmable logic controllers (PLCs), computers, or other similar devices is not acceptable for Eversource-required protection.

All Eversource-required voltage relaying applied to three-phase energy sources must be applied on a three-phase basis.

## 4.5 Control Power

AC control power is not permitted for synchronous generator protection schemes.

All protection systems utilized for generator protection must utilize a battery power source. AC-powered inverters are not an acceptable DC supply. The battery must be equipped with appropriate charging and monitoring facilities. The monitoring facilities must announce battery high voltage, battery low voltage, and battery grounds. Interrupting devices associated with Eversource-required protection and supplied power from the DC battery must be equipped with facilities configured to trip the associated generator interrupting device with an alternate supply immediately on loss of DC system trip capability. Direct AC trip and capacitor trip devices are acceptable for this backup function

Any protection scheme that utilizes AC control power must be designed in a fail-safe mode. That is, all protective components must utilize contacts which are closed during normal operating conditions, but which open during abnormal conditions or when control power is lost to de-energize the generator contactor coil. These schemes require non-latching contactors.

## 4.6 Current Transformers

Current Transformer (“CT”) ratios and accuracy classes for CTs as used in the generating Facility protection shall be consistent with ANSI and IEEE standards.

All current transformers (CT) driving Company-required protection systems must be rated by the manufacturer as to accuracy class and must be capable of driving their connected burdens with an error not exceeding 10 percent under worst-case fault conditions.

The secondary windings of instrument transformers feeding Eversource-required protection equipment will be grounded at one point, and one point only.

## 4.7 Voltage Transformers

The DER shall be equipped with a direct voltage connection or a Voltage Transformer ("VT"), which shall be connected to the Company side of the interrupting device. For three-phase applications, a VT for each phase is required. If the interconnecting voltage transformer is ungrounded at the Utility voltage, this VT shall be a single three-phase device or three single-phase devices connected from each phase to ground on the Company's side of the DER interconnecting transformer, rated for phase-to phase voltage.

All voltage transformers (VT) driving Company-required protection systems must be formally rated by the manufacturer as to accuracy class and must be capable of driving their connected burdens with an error not exceeding 1.2 percent.

## 4.8 Transfer Trip Schemes

A transfer trip scheme may be required by the Company to ensure safe and reliable operation of the EPS. A transfer trip scheme is a system that automatically isolates the DER installed with a customer service during a potentially adverse condition where control and protection solutions located solely at the DER facility may not be able to detect the condition. If a transfer trip scheme is deemed necessary, the Company will explain the necessity and cost for implementing that solution with the DER owner. The scheme will be driven by a signal sent by the Company and received and acted upon by equipment designated by the Company to isolate the DER facility from the Company EPS. The communication medium required to install the transfer trip scheme may vary due to application and may include radio, phone, or high-speed fiber.

## 4.9 Generator Step-Up (GSU) Transformer Configurations

The Company may not specify Generator Step-Up (GSU) transformer configuration type. However, the transformer high side must be compatible with the EPS. The protection requirements listed in Section 3.2 shall apply to all GSU types. The DER owner's engineer shall design a protection scheme that is able to sense and isolate the DER facility for all instances of Over/Under Voltage (27, 59), Over/Under Frequency (80/81) and Over Current (50/51) for BOTH sides of the GSU. Potential Transformers for relay applications shall always be installed on the high voltage side of the GSU.

## 4.10 Grounding and Bonding

Eversource reserves the right to specify any aspect of the DER's grounding scheme if deemed necessary by Eversource Engineering. This may include GSU winding configuration and neutral grounding method.

Effective grounding shall be required for all DER interconnections where any of the following is true:

- The fault current at the point of common coupling (PCC) is caused to increase by at least 10 percent of the existing value.
- Areas where fault current may already be deemed excessive.
- DER interconnections equal to or larger than 1MW.
- Anywhere there may exist a potential islanding concern regarding generation to load ratio.

Eversource will review and deem the proposed design effectively grounded for all DER facilities. Any changes to the approved one-line will require reevaluation for effective grounding. Change in grounding will be reviewed for potential impacts on Eversource distribution system or might require a restudy.

Effective Grounding Methods:

To achieve effective grounding, the DER owner shall design and install an interconnection system where the ratio of the DER's reactance parameters meets the following criteria:

$X0/X1<3$

X0 = zero sequence reactance and X1 = positive sequence reactance at the PCC

DER that requires effecting grounding shall use one of the following methods:

- A GSU with a reactively grounded neutral on the high (utility) wye-connected side and a delta configuration on the low (generator) side.
- A GSU with a grounded-wye / grounded-wye configuration and a grounding transformer on either side of the GSU.
- A delta high (utility) side GSU configuration and a grounding transformer on the high (utility) side.

DER that does NOT require effecting grounding shall use:

- A GSU with delta windings on the high (utility) side of the GSU in conjunction with a customer provided 59N (3V0) scheme fed by PTs on the high (utility) side of the GSU.

## 4.11 Closed Transition Emergency (Stand-by) Generator ("EG")

### 4.11.1 Momentary Parallel

A DER may momentarily be paralleled with the Company EPS to provide disturbance free transfer of load to and from the EPS for testing, peak shaving, load curtailment, or returning load to Company supplied service. Interconnection requirements will be determined by the length of time the generation is paralleled with the EPS.

a) Instantaneous Parallel [Less than 10 cycles (0.167 seconds)]. Additional Generator relaying in this section are generally not required, but may be specified, installed, and maintained at the discretion of the EG owner. If installed, the following conditions apply:

(1) The EG does not have to present a grounded-wye source to the EPS.

(2) The parallel and disconnecting operation must be automatic, instantaneous (switching time only) and less than 10 cycles (0.167 seconds) duration.

(3) A paralleled transfer must be blocked if the normal source to the load is not within +/- 10% of nominal voltage.

(4) The transfer scheme must be acceptable to the Utility.

(5) The parallel operation must be monitored by a timing relay, which will trip the generators main breaker or contactor if the parallel operation lasts longer than 0.5 seconds. The tripping voltage must be from a battery. Capacitor trip devices are not acceptable.

b) Transitional Parallel

(1) The EG does not have to present a grounded-wye source to the EPS. If the EG does not present a grounded-wye source, Zero Sequence Over Voltage Relays (59G) must be installed and wired to trip the generator(s).

(2) The parallel, EG loading and disconnecting operations must be automatic. Parallel time must be kept to a minimum and must never exceed five (5) seconds.

(3) A paralleled transfer must be blocked if the normal source to the load is not within +/- 10% of nominal voltage.

(4) The transfer scheme must be acceptable to the Utility.

(5) The parallel operation must be monitored by a timing relay, which will trip the EG main breaker(s) if the parallel lasts longer than 5 seconds. The tripping voltage source must be from a battery. Capacitor trip devices are not acceptable

(6) Over/under voltage and over/under frequency relays must be installed based on the size and type of generation being installed. Additional EG relaying is not required but may be specified, installed, and maintained at the discretion of the EG owner.

(7) The EG owner must receive permission from the Company prior to making the parallel with the generator.

### 4.12 Open Transition Emergency (or Stand-by) Generator (EG)

Connection of an EG does not require an Interconnection Application when the EG facility's manual or automatic transfer switch will not allow any parallel operation of the EG Facility with the EPS. This electrical state (i.e., open transition transfer) is typically referred to as "break-before-make," which means that the EG Facility's transfer switch must be designed and operated to prevent the EPS-provided power and the EG Facility-provided power from powering the Facility circuits (i.e., load) at the same time. Consequently, this mode of operation will also prevent the generating Facility from potentially energizing the EPS.

## 5 Networks

### 5.1 Spot Networks

The proposed DER to be interconnected to the load side of spot network protectors must utilize an inverter-based equipment package and, when aggregated with other inverter-based DER, shall not exceed the lesser of five percent (5%) of a spot network's maximum load or 50 kW. Under no condition shall the interconnection of a DER facility result in a back feed of, or cause unnecessary operation of, any spot network protectors. All inverters must be IEEE 1547 and UL1741 compliant and certified to stop conducting prior to the three (3) cycle response of the network protector relays.

All network interconnections shall also align with all sections of IEEE 1547 and IEEE 1547.6. Below are additional requirements regarding IEEE 1547 compliance on Eversource networks.

- Connection of the DER to the EPS shall be permitted only if the EPS network bus is already energized by more than 50% of the installed network protectors. The customer shall also install a utility grade control scheme capable of monitoring the status of all network protectors and will trip a dedicated DER breaker instantaneously any time the number of closed network protectors falls to 50% or less.
- The DER shall comply with all Company anti-islanding requirements.
- The customer shall install minimum import protection (32 relay functionality) that is set to trip a dedicated DER breaker(s) and isolate all DER from the Eversource EPS any time power import at the metering location drops below 10% of the customer's minimum load or 10% of the DER facility's total gross name plate rating, whichever is

greater. Facilities with multiple DERs in parallel on site, the 'DER name plate' value will be considered the cumulative sum of all DER name plates on site.

### 5.2 Area Networks

A generating facility proposed to be interconnected to the load side of an area network protector must utilize an inverter-based equipment package and meet all of the following requirements.

- When aggregated with other inverter-based generation, the DER shall not exceed 50 kW at any location. A location is defined as any manhole, secondary network vault or service box. This criterion is designed to ensure that no more than 50 kW of DER is located on the same secondary network node.
- In addition, the aggregate DER interconnected to an area network grid shall be limited to 3% of the maximum network transformer connected kVA with the feeder supplying the largest number of network units out of service, or a maximum of 500 kW, whichever is less.
- The DER shall comply with all applicable standards (e.g. IEEE 1547, IEEE 1547.6, UL1741, etc.)
- The DER shall comply with all Company interconnection requirements.
- The customer shall insure that the DER cannot export power to the area network at any time under any contingency and shall install minimum import protection (32 relay functionality) that is set to trip a dedicated DER breaker(s) and isolate all DER from the Eversource EPS any time power import at the metering location drops below 10% of the customer's minimum load or 10% of the DER facility's total gross name plate rating, whichever is greater. Facilities with multiple DERs in parallel on site, the 'DER name plate' value will be considered the cumulative sum of all DER name plates on site. Load history, dynamic network studies, engineering design drawings or additional equipment may be required by Eversource Engineering to allow for interconnection.

## 6 Testing and Maintenance Requirements

All testing must be completed in accordance with the latest approved version(s) of IEEE 1547.

### 6.1 Witnessing of Commissioning Test

The Company requires inspections of completed installations for compliance with requirements. The Company reserves the right to require a Witness Test of the commissioning of all DER Facilities as approved by the Company. The DER owner will provide a proposed Witness Test procedure and all requisite supporting documentation for review by the Company once the DER owner has completed the installation of the Facility.

Testing typically includes, but is not limited to:

- CT and CT circuit polarity, ratio, insulation, excitation, continuity and burden tests.
- VT and VT circuit polarity, ratio, insulation and continuity tests.
- Relay pick-up and time delay tests.
- Functional breaker trip tests from protective relays.
- Relay in-service test to check for proper phase rotation and magnitudes of applied currents and voltages.
- Breaker closing interlocks tests.
- Paralleling and disconnection operation.
- Anti-islanding function, if applicable.
- Non-export functions, if applicable.
- Synchronizing Controls, if applicable.
- Proof of inability to energize deadlines.

Each commissioning test shall include both a calibration check and an actual trip of the circuit breaker or contactor from the device being tested. Visually setting a calibration dial, index or tap is not considered an adequate calibration.

## 6.2 Periodic Testing

The DER owner is responsible for the periodic maintenance of all relays, interrupting devices, control schemes, and batteries that involve the protection of the EPS. Eversource may require annual testing and calibration of relays.

Batteries shall be load tested once every twenty-four months, or more frequently based on the manufacturer's recommendations.

The test cycle for protective relaying must not be less frequent than once every sixty (60) calendar months or the cycle recommended by the manufacturer, whichever is shorter. The DER owner must provide copies of these test records to the Utility upon request. The Company shall have the right to monitor the periodic maintenance performed.

For Company required protection relays and elements a Company approved independent certified testing company must be utilized. Each routine check shall include both a calibration check and an actual trip of the circuit breaker or contactor from the device being tested. Visually setting a calibration dial, index or tap is not considered an adequate calibration.

## 6.3 Safe Operations and Maintenance

The DER owner shall operate, maintain, repair, and inspect, and shall be fully responsible for the DER and any other associated facilities that it now or hereafter may own unless otherwise specified in an Agreement between the DER owner and the Company. The DER owner and the Company shall each be responsible for the maintenance, repair and condition of its respective lines and appurtenances on its respective side of the point of interconnection. The Company and the DER owner shall each provide equipment on its respective side of the point of interconnection that adequately protects the EPS, personnel, and other people from damage and injury.

All maintenance shall be performed as specified by equipment manufactures specification and as specified in any Agreement between the Company and the DER owner.

## Appendix A - Utility Grade Relay Requirements

When specified and required utility grade protective relay systems shall meet the following standards:

- IEEE C37-90, .1, .2
- IEEE C39.90.1
- Environmental testing Standards Part 2 of: IEC 68-2-1, IEC 68-2-2, IEC 68-2-3, & IEC 68-2-30,
- Part 5 of IEC 255-5, Insulation tests for electrical relays. Section 6 Dielectric Tests.
- Part 21 of IEC 255-21-1, 2, 3, Sections 1, 2 & 3. (Vibration, shock, bumps.)
- IEC 255-22-1, 2, 3, 4 Section's 1, 2, 3 & 4, Electrical disturbance tests for measuring relays and protection equipment.
- IEC 255-5 Insulation (Impulse Voltage Withstand)
- IEC 801- 2, 3, & 4 Electromagnetic compatibility for Industrial-process measurement and control equipment parts 2, 3, and 4.
- Relays which meet the latest versions of IEEE C62.45-2002
- Relays that have appropriate test plugs/switches for testing the operation of the relay without unwiring or disassembly.
- Relays that have targets to indicate relay operation.
- Relays that have the ability to record and store fault events.
- Industrial grade relays are generally not permitted for DER interconnections

This requirement is to ensure that the protective relay system will work under a variety of environmental and operational conditions.