Information & Requirements For Electric Supply

CT

2024 Edition

This publication supersedes similar publications previously issued.

EVERSOURCE ENERGY

Table of Contents

Safety First and Always 1
Contact Us 2
Service Territory Map 3
Municipalities Partially or Wholly Served by the Company 4
Construction Requirements
- Clevis Installation 8
- Conduit Service - House End 9
- Conduit Service - Supply End 10
- Electric Equipment Ownership & Required Meter Clearances 11
- Flood Plain Meter Installation - Overhead 12
- Flood Plain Meter Installation - Underground 13
- Hot and Cold Meter Sequence - Self Contained 14
- Instrument Transformer Connections 15
- Main Switch and Instrument Transformer Enclosure 16
- Meter Load Pulse Enclosure 17
- Metering For Secured Locations 18
- Modular Meter Panels For Group Metering 19
- Outdoor Instrument Transfomer Meter Socket With Test Switch 20
- Overhead Service Drop 21
- Overhead Service Entrance 22
- Permanent Built Meter Pedestal 23
- Permanent Manufactured Meter Pedestal 24
- Permanent Multi-Gang Meter Pedestal (Includes Cell Cites) 25
- Remote Communications Power Site - Typical 26
- Self-Contained Meter Socket Sequence and Mounting Arrangement 27
- Service Mast 28
- Single Phase Self Contained Metering Connections 29
- Temporary Electric Service - Conduit System 30
- Temporary Electric Service - Conduit System (cont) 31
- Temporary Electric Service - Overhead System 32
- Temporary Electric Service - Overhead System (cont) 33
- Three Phase Self Contained Metering Connections 34
- Transfer Switch Installation in Conjunction with Auxiliary Supply 35
- Trenching Requirements for Service or Secondary Line 36

Section 1 - General Information 37
Section 2 - Residential Cut and Reconnect Policy 41
Section 3 - Types of Electric Service 44
Section 4 - Characteristics of Supply (480 Volts & Below) 48
Section 5 - Customer Owned Faciities 50
Section 6 - Metering 52
Section 7 - Utilization Equipment Specifications. 62
Section 8 - Distributed Energy Resources Owned by Customers 63

Safety First and Always

The safety of customers, contractors, company employees and the public are the number one priority of providing electric service connections.

Report any downed, low hanging or burning wires to the Company at 1-800-286-2000 or the police or fire department.

All OSHA requirements must be followed when working near energized conductors. Any contact with Company wires may cause serious injury or death. Treat all downed, low hanging or burning wires as though they are "LIVE" – energized – and stay away.

Equipment such as ladders, scaffolding, etc., regardless of what they are made of, can be electrified if brought in contact with wires. Use extra caution when installing siding, painting, cleaning gutters or other reasons to work near our facilities. ***It is recommended that you contact the Company before starting work.*** Upon request, the Company will install line-hose guards or hard guards to help with preventing accidental contact with the electrical lines by providing additional visibility only. The Company will not cover an entire line or multiple spans of wire. In some cases, customer charges will apply.

Connecticut State law requires contacting "Call Before You Dig" two full working days prior to doing any excavation, digging holes, or driving posts regardless of whether it is within the street or on private property. Obtain information by calling, in Connecticut, 1-800-922-4455.

Removal or relocation of existing Company overhead or underground service equipment is prohibited. Contact the Company if removal or relocation is necessary.

Do not enter or open existing electrical structures such as hand holes, transformer pads or switch vaults.

Heavy construction equipment such as cranes, derricks, backhoes, dump trucks, etc., should not be operated closer than ten feet from energized power lines rated at 50 kV or below. For lines rated over 50 kV, the minimum clearance between the lines and any part of the equipment shall be ten feet plus four inches for each kV over 50 kV as prescribed by OSHA Regulations (S1926 subpart N-550-(a) 15 (i) and (ii)). It is important to safely excavate when adjacent to Company utility poles. In some cases, bracing may be required. Consult with the Company.

Swimming pools and spas shall not be installed beneath overhead facilities or above underground facilities. Please contact the Company if you are planning to install a pool near overhead or underground lines.

Where hazards exist, ground fault circuit interrupters must be used in accordance with Code. In addition, we strongly recommend their installation on existing wiring.

Never replace/install fuses or breakers for main switch or branch circuits with other than the proper size for the installation in accordance with Code.

Proper installation of emergency generators or other power sources is essential to avoid electrical source feeding back into our lines and endangering unsuspecting utility workers. Contact the Company prior to connecting to your system.

In general, antennas, banners, signs, or similar customer equipment shall not be attached to Company poles except by special permission from the Company.

Keep shrubs, debris, fences, and other structures clear of meters, padmount transformers, and other Company equipment in accordance with the required clearances stated within this publication.

Contact Us

Electric Service Support Center

To initiate a work request, check on the status of an existing request, and obtain additional electrical service information visit eversource.com Builders & Contractors or contact us by telephone or email:

Monday – Friday 7:00 a.m. to 4:30 p.m.
1-888-544-4826
ctnewservice@eversource.com

Distributed Generation

For information, visit eversource.com, Distributed Generation, Interconnections and Net Metering or contact us by telephone or email:

Monday – Friday 8:00 a.m. to 6:00 p.m.
1-844-344-6361
ctdg@eversource.com

Questions or concerns not adequately addressed by the Company may be directed to the Connecticut Public Utilities Regulatory Authority:

Connecticut Public Utilities Regulatory Authority

Monday – Friday 8:30 a.m. to 4:30 p.m.
www.ct.gov/pura

EVERSOURCE CONNECTICUT - AREA WORK CENTER LOCATIONS	
Cheshire Area Work Center	705 West Johnson Avenue, Cheshire CT 06410
Danielson Area Work Center	173 Mechanic Street, Danielson CT 06239
East Hampton Area Work Center	22 E. High Street, East Hampton CT 06424
Hartford Area Work Center	410 Sheldon Street, Hartford CT 06106
Madison Area Work Center	135 New Road, Madison CT 06443
New London Area Work Center	63 Myrock Avenue, Waterford CT 06385
Newtown Area Work Center	20 Barnabas Road, Newtown CT 06470
Norwalk Area Work Center	9 Tindall Avenue, Norwalk CT 06851
Stamford Area Work Center	626 Glenbrook Road, Stamford CT 06906
Tolland Area Work Center	48 Tolland Stage Road, Tolland CT 06084
Torrington Area Work Center	174 Franklin Street, Torrington CT 06790
Waterbury Area Work Center	250 Freight Street, Waterbury CT 06702
OTHER IMPORTANT NUMBERS	
Dig Safe	800-922-4455
Public Utilities Regulatory Authority	800-382-4586

Eversource Connecticut Service Territory Map

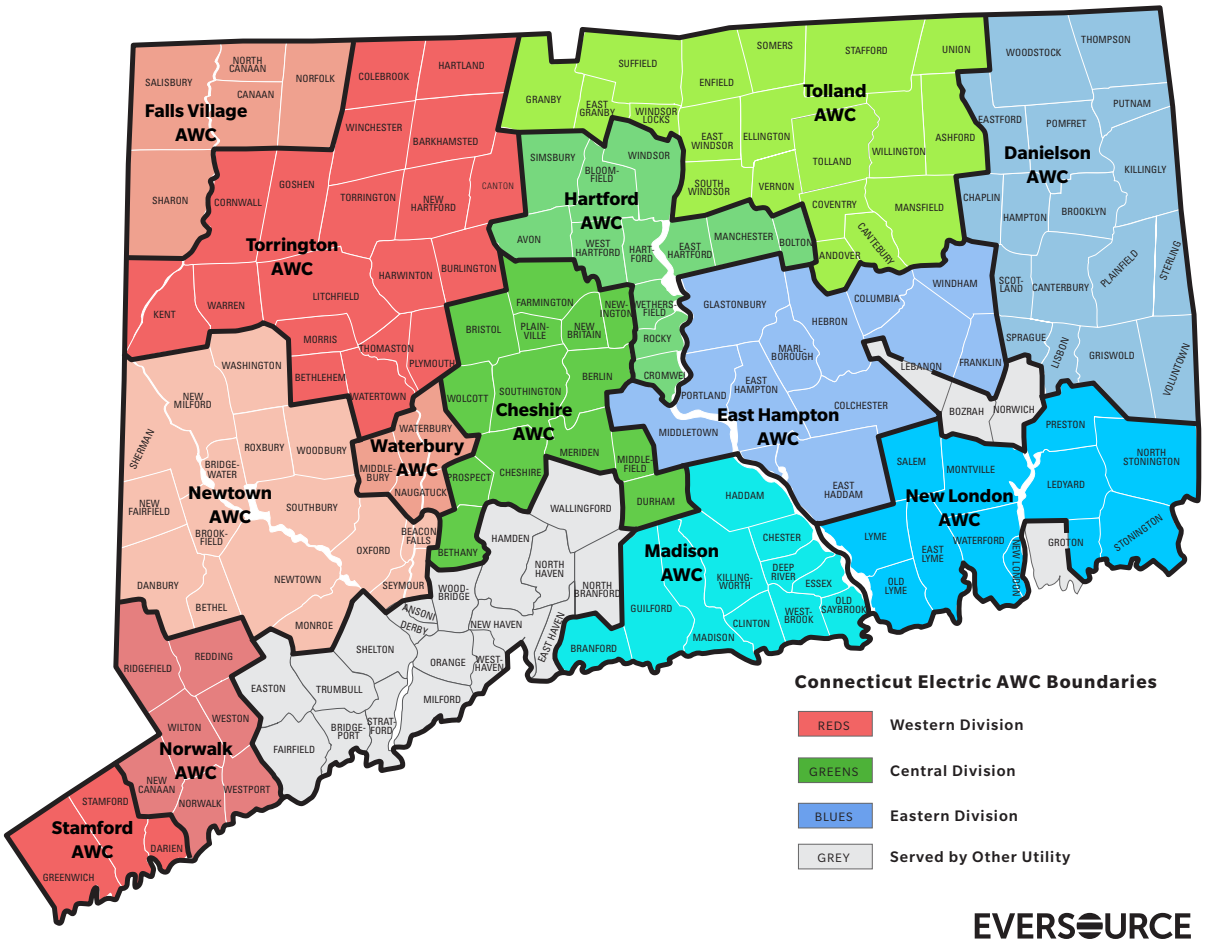

Municipalities Served by Eversource - Connecticut

TOWN	EVERSOURCE AREA WORK CENTER
Abington	Danielson
Addison	East Hampton
Almyville	Danielson
Amston	East Hampton
Andover	Tolland
Ashford	Tolland
Attawaugan	Danielson
Atwoodville	Tolland
Avon	Hartford
Baileyville	Cheshire
Baltic	Danielson
Bantam	Torrington
Barkhamsted	Torrington
Bashan	East Hampton
Beacon Falls	Waterbury
Berlin	Cheshire
Bethany	Cheshire
Bethel	Newtown
Bethlehem	Torrington
Black Hall	New London
Bloomfield	Hartford
Bolton	Hartford
Branford	Madison
Bridgewater	Newtown
Bristol	Cheshire
Broad Brook	Tolland
Brookfield	Newtown
Brooklyn	Danielson
Buckingham	East Hampton
Burlington	Torrington
Canaan	Torrington
Canterbury	Danielson
Canton	Torrington
Centerbrook	Madison
Central Village	Danielson
Chaplin	Danielson
Cheshire	Cheshire
Chester	Madison
Clarks Corner	Danielson
Clinton	Madison
Cobalt	East Hampton
Colchester	East Hampton
Colebrook	Torrington
Collinsville	Torrington
Columbia	East Hampton
Cornwall	Torrington

TOWN	EVERSOURCE AREA WORK CENTER
Cornwall Bridge	Torrington
Cos Cob	Stamford
Coventry	Tolland
Cromwell	Hartford
Crystal Lake	East Hampton
Danbury	Newtown
Danielson	Danielson
Darien	Stamford
Dayville	Danielson
Deep River	Madison
Dobsonville	Tolland
Durham	Cheshire
Eagleville	Tolland
East Berlin	Cheshire
East Canaan	Torrington
East Granby	Tolland
East Haddam	East Hampton
East Hampton	East Hampton
East Hartford	Hartford
East Hartland	Torrington
East Lyme	New London
East Windsor	Tolland
Eastford	Danielson
Ekonk	Danielson
Ellington	Tolland
Elmville	Danielson
Elmwood	Hartford
Enfield	Tolland
Essex	Madison
Fabyan	Danielson
Falls Village	Torrington
Farmington	Cheshire
Fenwick	Madison
Forestville	Cheshire
Franklin	East Hampton
Gales Ferry	New London
Gaylordsville	Newtown
Georgetown	Norwalk
Gildersleeve	East Hampton
Gilead	East Hampton
Glasgo	Danielson
Glastonbury	East Hampton
Goshen	Torrington
Granby	Tolland
Greenwich	Stamford
Griswold	Danielson

Municipalities Served by Eversource - Connecticut

TOWN	EVERSOURCE AREA WORK CENTER
Grosvenordale	Danielson
Groton	New London
Grove Beach	Madison
Guilford	Madison
Gurleyville	Tolland
Haddam	Madison
Haddam Neck	East Hampton
Hadlyme	New London
Hallville	New London
Hamburg	New London
Hampton	Danielson
Hanover	Danielson
Hartford	Hartford
Hartland	Torrington
Harwinton	Torrington
Hazardville	Tolland
Hebron	East Hampton
Higganum	Madison
Hop River	East Hampton
Hydeville	Tolland
Indian Neck	Madison
Ivoryton	Madison
Kensington	Cheshire
Kent	Torrington
Killingly	Danielson
Killingworth	Madison
Knollwood	Madison
Lakeside	Torrington
Lakeville	Torrington
Lebanon	East Hampton
Ledyard	New London
Leetes Island	Madison
Liberty Hill	East Hampton
Lime Rock	Torrington
Lisbon	Danielson
Litchfield	Torrington
Little Haddam	East Hampton
Lyme	New London
Madison	Madison
Manchester	Hartford
Mansfield	Tolland
Mansfield Center	Tolland
Marble Dale	Newtown
Marion	Cheshire
Marlborough	East Hampton
Mechanicsville	Danielson

TOWN	EVERSOURCE AREA WORK CENTER
Melrose	Tolland
Meriden	Cheshire
Merrow	Tolland
Middle Haddam	East Hampton
Middlebury	Cheshire
Middlefield	Cheshire
Middletown	East Hampton
Milldale	Cheshire
Millington	East Hampton
Monroe	Newtown
Montville	New London
Moodus	East Hampton
Moosup	Danielson
Morris	Torrington
Mystic	New London
Naugatuck	Cheshire
New Britain	Cheshire
New Canaan	Norwalk
New Fairfield	Newtown
New Hartford	Torrington
New London	New London
New Milford	Newtown
New Preston	Newtown
Newfield	Stamford
Newington	Cheshire
Newtown	Newtown
Niantic	New London
Noank	New London
Norfolk	Torrington
North Canaan	Torrington
North Stonington	New London
North Thompsonville	Tolland
Northfield	Torrington
Norwalk	Norwalk
Nut Plains	Madison
Oakdale	New London
Oakville	Waterbury
Old Lyme	New London
Old Mystic	New London
Old Saybrook	Madison
Oneco	Danielson
Orcuttville	Tolland
Oxford	Waterbury
Pachaug	Danielson
Pawcatuck	New London
Pequabuck	Cheshire

Municipalities Served by Eversource - Connecticut

TOWN	EVERSOURCE AREA WORK CENTER
Phoenixville	Danielson
Pine Meadow	Torrington
Pine Orchard	Madison
Plainfield	Danielson
Plainville	Cheshire
Plantsville	Cheshire
Pleasant Valley	Torrington
Plymouth	Torrington
Plymouth	Cheshire
Pomfret	Danielson
Pond Meadow	Madison
Ponset	Madison
Poquetanuck	New London
Portland	East Hampton
Preston	New London
Prospect	Cheshire
Putnam	Danielson
Putnam Heights	Danielson
Quaddick	Danielson
Quaker Hill	New London
Quinebaug	Danielson
Redding	Newtown
Redding Ridge	Norwalk
Ridgefield	Newtown
Rockfall	Cheshire
Rockland	Madison
Rockville	Tolland
Rocky Hill	Hartford
Rogers	Danielson
Rowayton	Norwalk
Roxbury	Newtown
Sadds Mill	Tolland
Salem	New London
Salisbury	Torrington
Saybrook Point	Madison
Scantic	Tolland
Scotland	Danielson
Seymour	Waterbury
Sharon	Torrington
Sherman	Newtown
Short Beach	Madison
Simsbury	Hartford
Somers	Tolland
Somersville	Tolland
Sound View	New London
South Glastonbury	East Haddam

TOWN	EVERSOURCE AREA WORK CENTER
South Kent	Torrington
South Lyme	New London
South Windsor	Tolland
Southbury	Waterbury
Southington	Cheshire
Sprague	Danielson
Spring Hill	Danielson
Stafford	Tolland
Stafford Springs	Tolland
Staffordville	Tolland
Stamford	Stamford
Sterling	Danielson
Sterling Hill	Danielson
Stonington	New London
Storrs	Tolland
Suffield	Tolland
Taconic	Torrington
Talcottville	Tolland
Terryville	Cheshire
Thomaston	Torrington
Thompson	Danielson
Tolland	Tolland
Torrington	Torrington
Tylerville	Madison
Uncasville	New London
Union	Tolland
Union City	Waterbury
Unionville	Cheshire
Vernon	Tolland
Versailles	Danielson
Voluntown	Danielson
Warehouse Point	Tolland
Warren	Torrington
Warrenville	Tolland
Washington	Newtown
Washington Depot	Newtown
Waterbury	Waterbury
Waterford	New London
Watertown	Waterbury
Wauregan	Danielson
Weatogue	Hartford
Wequetequock	New London
West Ashford	Tolland
West Cornwall	Torrington
West Granby	Tolland
West Hartford	Hartford

Municipalities Served by Eversource - Connecticut

TOWN	EVERSOURCE AREA WORK CENTER
West Hartland	Torrington
West Mystic	New London
West Redding	Norwalk
West Simsbury	Hartford
Westbrook	Madison
Westchester	East Hampton
Westfield	East Hampton
Westminster	Danielson
Weston	Norwalk
Westport	Norwalk
Wethersfield	Hartford
Willimantic	East Hampton
Willington	Tolland
Wilton	Norwalk
Winchester	Torrington
Windemere	Tolland
Windham	East Hampton
Windsor	Hartford
Windsor Locks	Tolland
Windsorville	Tolland
Winsted	Torrington
Winthrop	Madison
Wolcott	Cheshire
Woodbridge	Waterbury
Woodbury	Waterbury
Woodstock	Danielson
Woodstock Valley	Danielson

Clevis Installation

Bolt type clevis with through bolt and bearing plate required for masonry structures, metal structures, and Company approved services greater than 125 feet. Furnished by the Company and installed by the Customer.

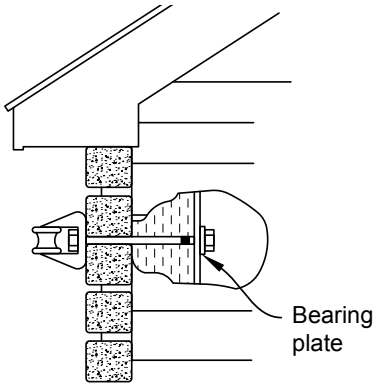

Lag type clevis required for all other services less than 125 feet for wood structures. Furnished and installed by the Company.

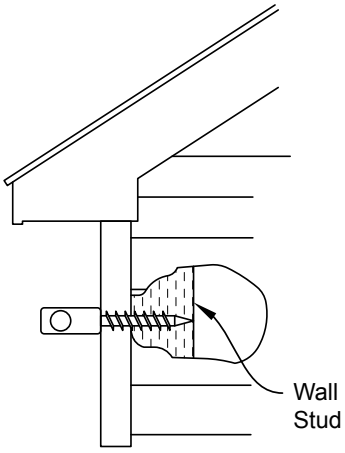

NOTES

1. Stud location for the Company clevis shall be marked by the Customer.
2. Contact the Company for a service attachment point exceeding 20 feet in height.
3. Contact the Company for a service exceeding 125 feet in length.

Conduit Service - House End

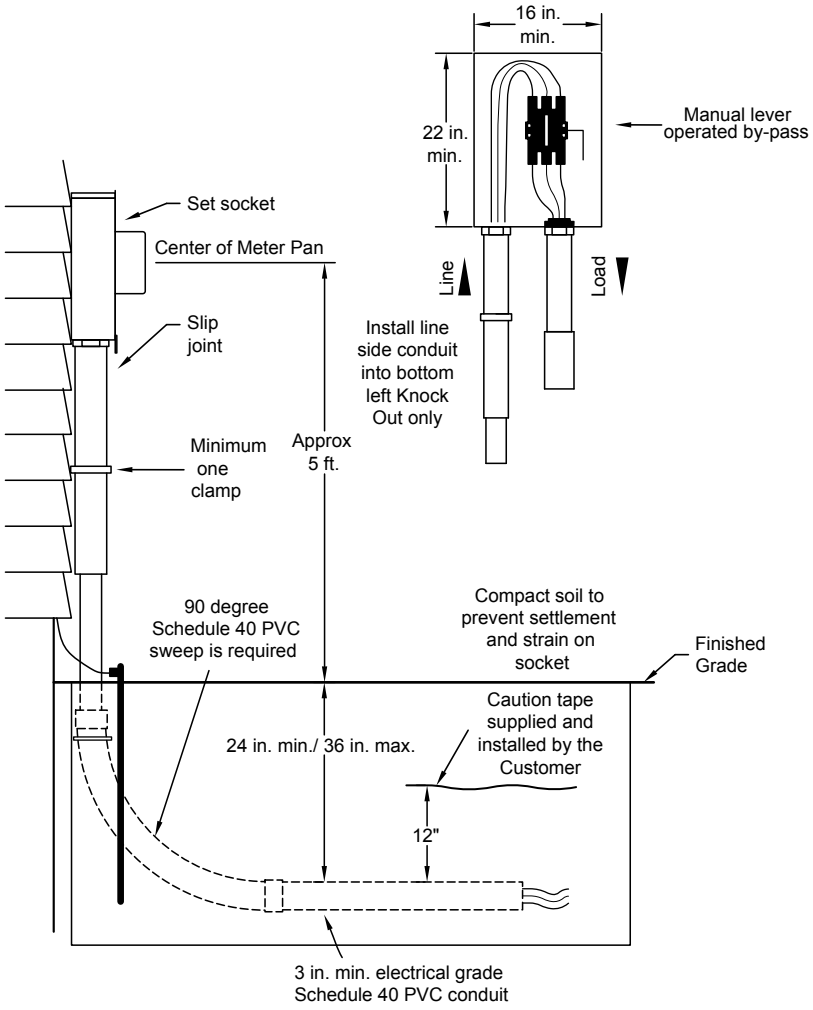

NOTES

1. Grounding and bonding supplied by the customer required when using galvanized steel sweeps.
2. Customer provided caution tape shall be red plastic with black lettering. The warning message on the red plastic caution tape shall read: CAUTION – ELECTRICAL LINE BURIED BELOW.
3. Conduit shall be inspected by the municipal authority prior to backfilling.
4. Suitable backfill shall not contain ash, cinder, shell, frozen material, loose debris, or stones larger than 2 inch maximum dimension.

Conduit Service - Supply End

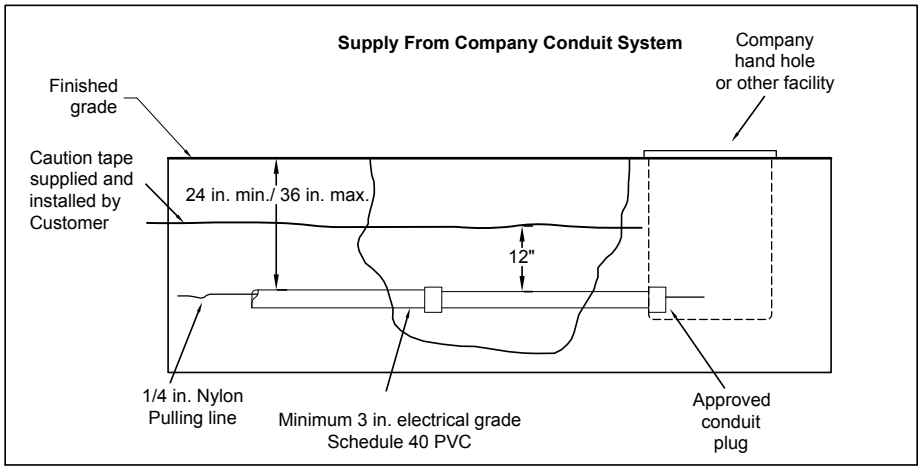

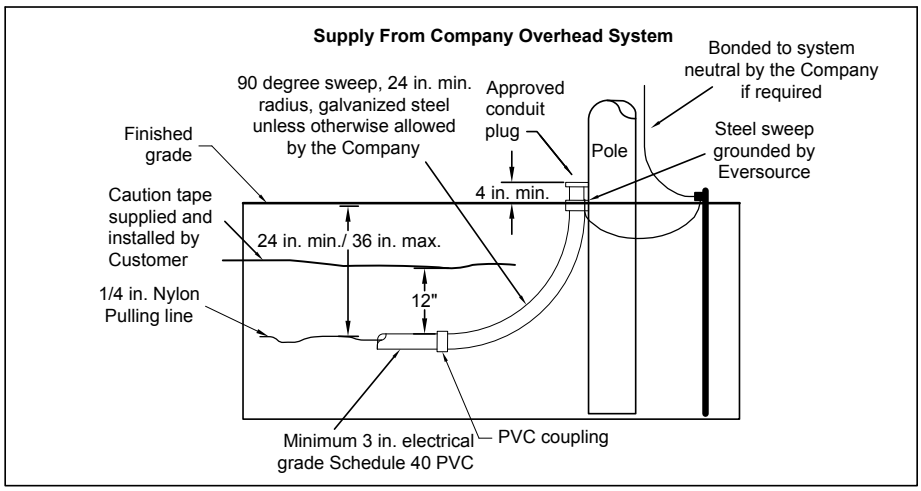

NOTES

1. Do not enter or open existing electrical structures such as hand holes, transformer pads, or switch vaults when installing the pulling line.
2. Minimum 3 inch electrical grade schedule 40 PVC. Contact the Company for acceptable conduit size.
3. Grounding and bonding supplied by the customer required when using galvanized steel sweeps.
4. Electrical service sweeps shall be located on the pole side away from oncoming traffic.
5. Customer provided caution tape shall be red plastic with black lettering. The warning message on the red plastic caution tape shall read: CAUTION – ELECTRICAL LINE BURIED BELOW.
6. Conduit shall be inspected by the municipal authority prior to backfilling.
7. Suitable backfill shall not contain ash, cinder, shell, frozen material, loose debris, or stones larger than 2 inch maximum dimension.

Electric Equipment Ownership & Required Meter Clearances

CT ELECTRIC EQUIPMENT OWNERSHIP & REQUIRED METER CLEARANCES | EVERSOURCE

In the event your home's electrical equipment is damaged, you may have questions regarding which parts of your electric service are privately owned, which parts are maintained by Eversource, and what the proper clearances are for safe meter access.

Who Owns What

- **Eversource maintains the electric poles, wires and other equipment you see along your street, ending at the service drop *(see diagram, right)*. Eversource also repairs any damage to the meter itself.**
- **The wires and equipment that run from the service drop into a residence are the responsibility of the customer.**

If you have damage to the wires or equipment after the service drop, please contact a licensed and insured electrical contractor to perform the necessary repairs. In a storm situation, this will expedite your service restoration as the damaged equipment will need to be fixed prior to Eversource reconnecting the power lines to your home.

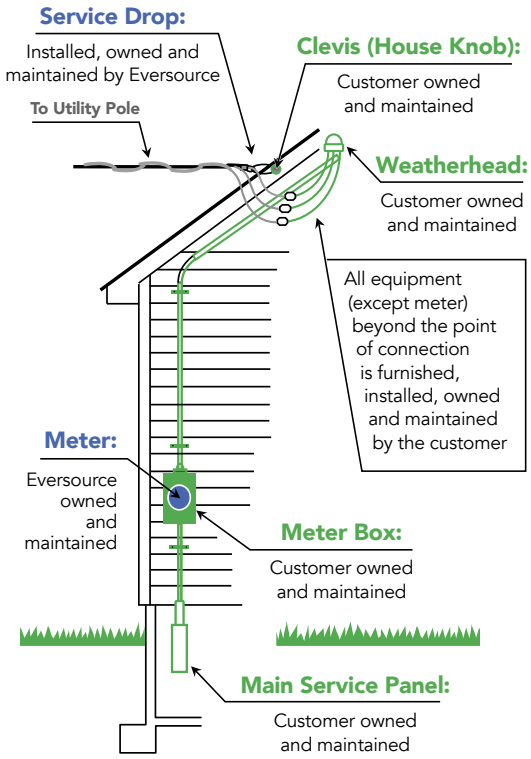

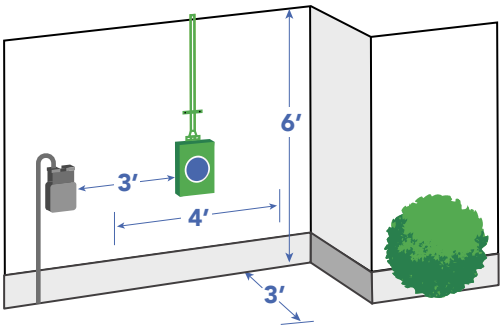

For your safety and ours, do not tamper with Eversource meter(s), its seals or connections. It's dangerous and against the law.

Required Meter Clearances

- For safe meter access, a clearance of four feet wide by three feet deep by six feet high is required *(see diagram, left)*. Please keep shrubs, debris, fences and other structures clear of this area.
- A three feet minimum distance between the edge of the electric meter and a gas meter is required.

Contact Us

Please visit us at **eversource.com** to view the Information and Requirements for Electric Supply booklet for Connecticut or call Eversource Customer Service at:

Connecticut Electric **800-286-2000**

Flood Plain Meter Installation - Overhead

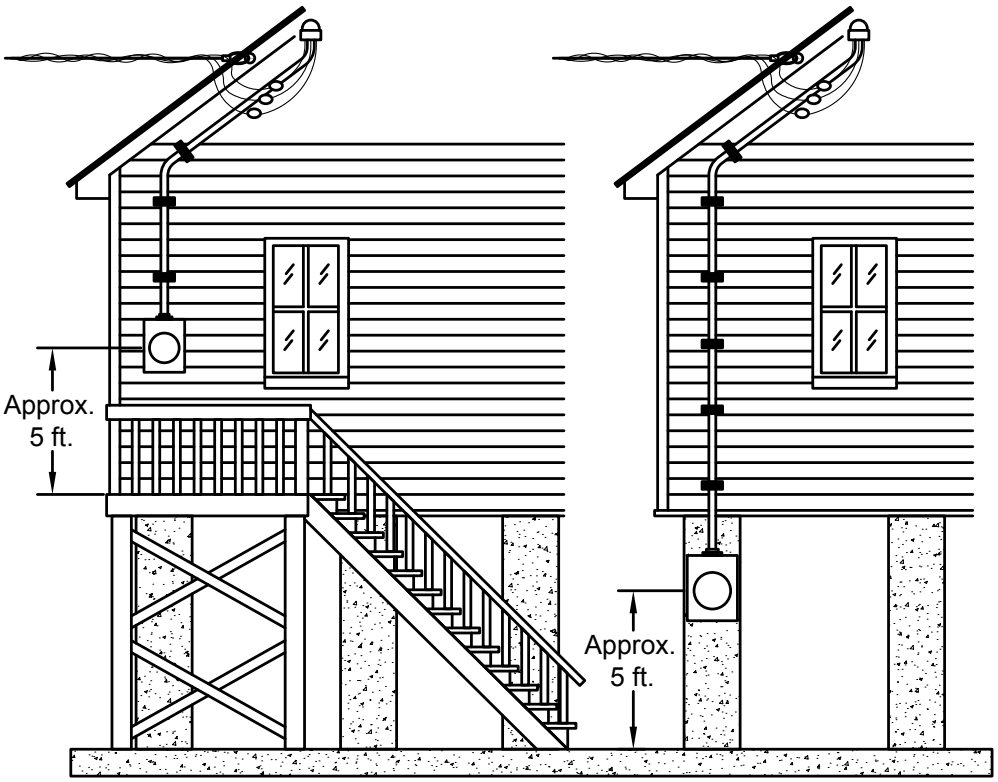

NOTES

1. Consult with the Company prior to construction of any location in a flood zone area.
2. In some shoreline areas designated as a flood plain, the customer may be required by FEMA regulations to install all electrical equipment above the DFE (Design Flood Elevation). This conflicts with the Company's requirements for meter sockets to be installed no higher than 72 inches to the top of the meter. In such cases, the Customer will be required to construct a suitable permanent stepped platform that meets local code and FEMA requirements, or other means to facilitate access for Company employees to perform meter work prior to energizing the service.
3. If a suitable platform cannot be constructed due to zoning or physical location of the service, an approved meter socket can be installed below the DFE. In this case, the Customer assumes full responsibility of cost to replace the service entrance equipment in the event of flood damage. Failure to comply with these requirements may result in the Company de-energizing the service and the Customer will be responsible for bringing service to Company standards.

Flood Plain Meter Installation - Underground

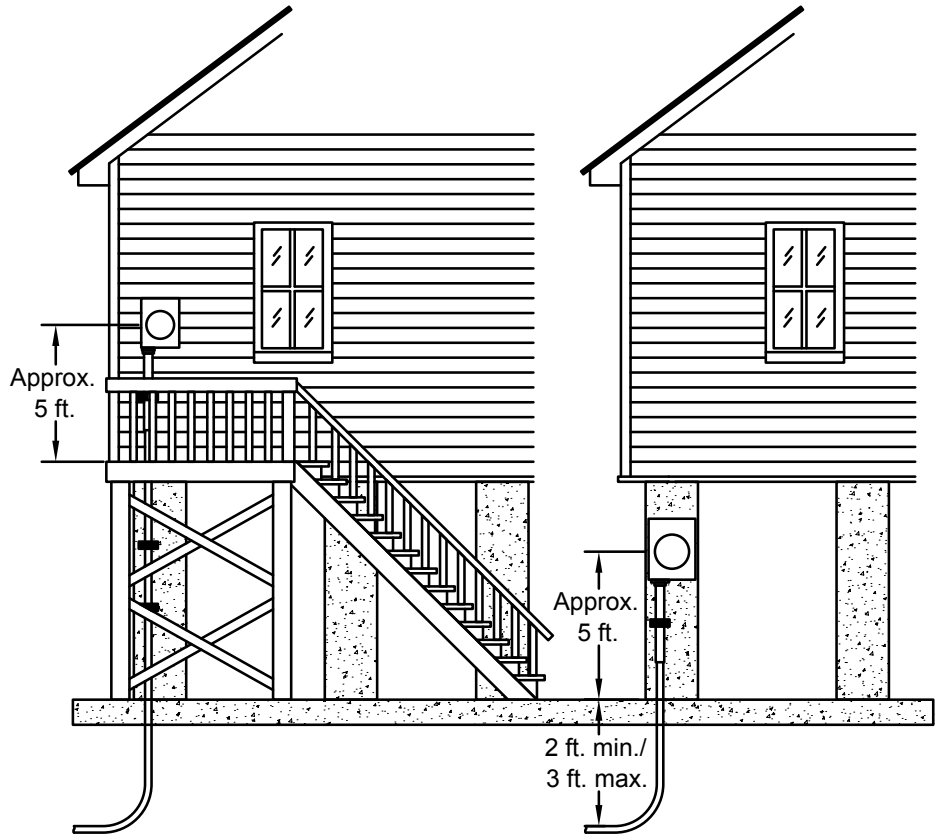

NOTES

1. Consult with the Company prior to construction of any location in a flood zone area.
2. In some shoreline areas designated as a flood plain, the customer may be required by FEMA regulations to install all electrical equipment above the DFE (Design Flood Elevation). This conflicts with the Company's requirements for meter sockets to be installed no higher than 72 inches to the top of the meter. In such cases, the Customer will be required to construct a suitable permanent stepped platform that meets local code and FEMA requirements, or other means to facilitate access for Company employees to perform meter work prior to energizing the service.
3. If a suitable platform cannot be constructed due to zoning or physical location of the service, an approved meter socket can be installed below the DFE. In this case, the Customer assumes full responsibility of cost to replace the service entrance equipment in the event of flood damage. Failure to comply with these requirements may result in the Company de-energizing the service and the Customer will be responsible for bringing service to Company standards.

Hot and Cold Meter Sequence - Self Contained

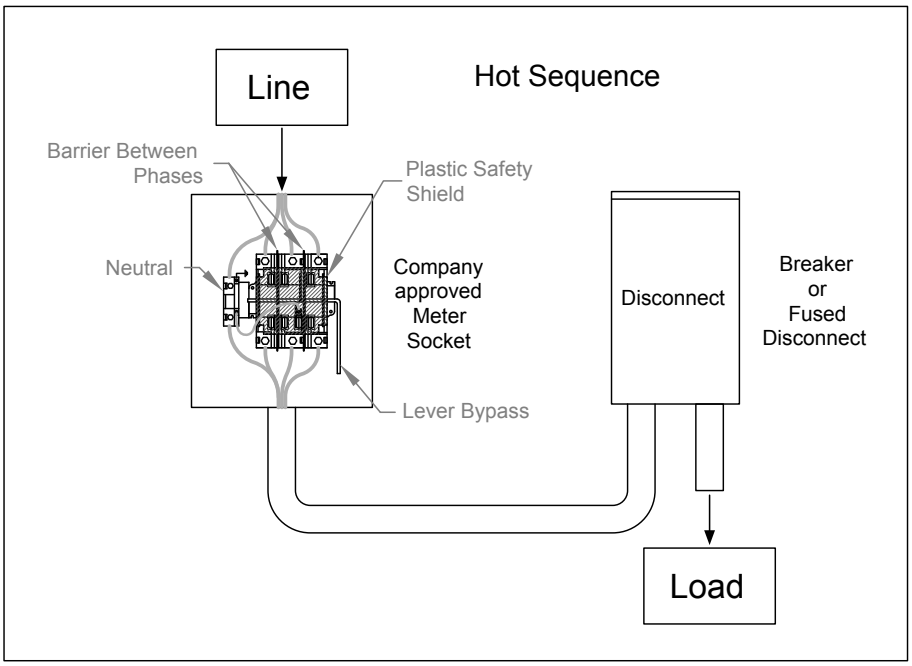

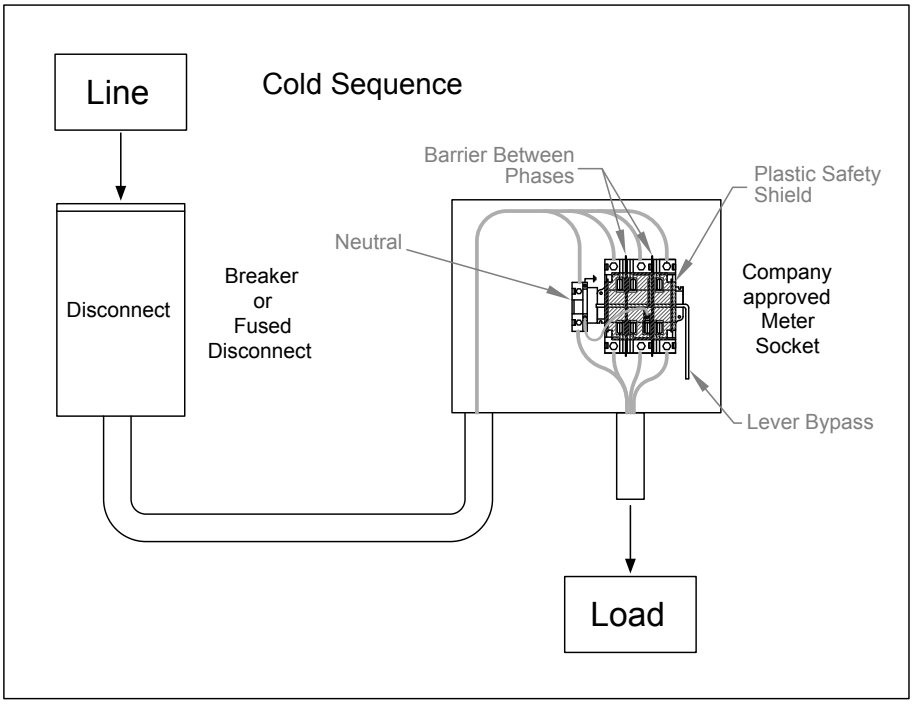

Instrument Transformer Connections

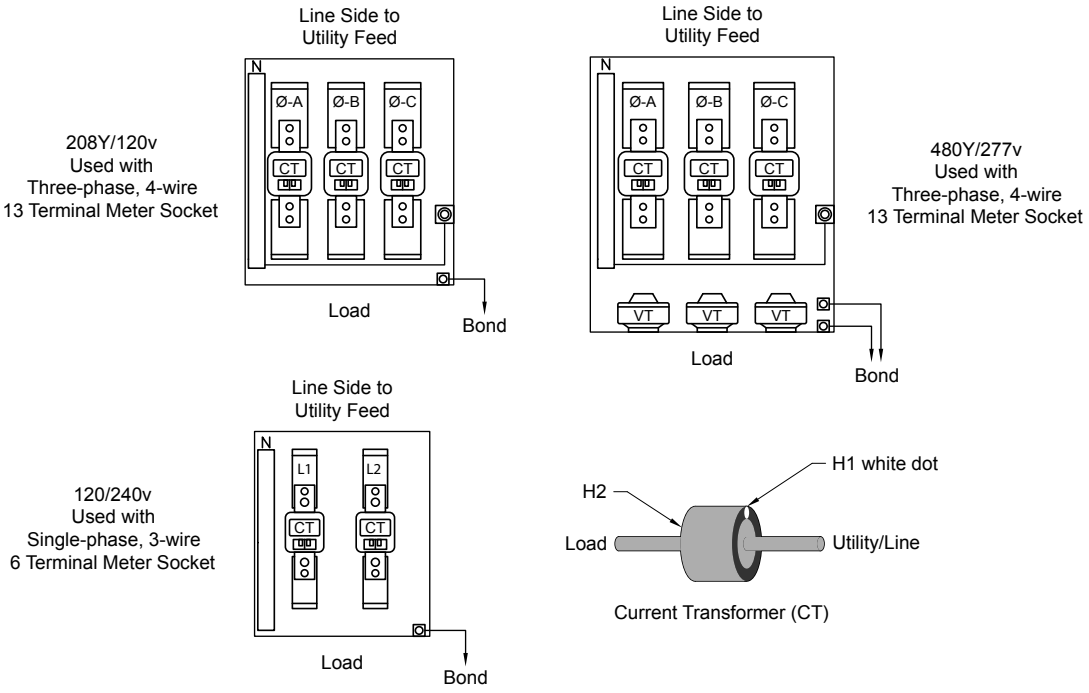

NOTES

Customer Responsibility:

1. Current transformers (CT) installed and torqued with H1 white dot polarity mark towards line/utility side.
2. Mounting provisions for voltage transformers (VT) in the horizontal position.
3. Providing and installing inside the Instrument Transformer (IT):
    - An approved isolated neutral from the same manufacturer and a #10 connector on the neutral.
    - Two #10 grounding connectors.
4. Labeling the service line and load side within the IT cabinet.
5. Conduit from the meter socket and into the IT cabinet must be 1 ½ inch in diameter and continuous. Conduit length shall be 50 feet or less.
6. Line box (LB) connections are not allowed.

Main Switch and Instrument Transformer Enclosure

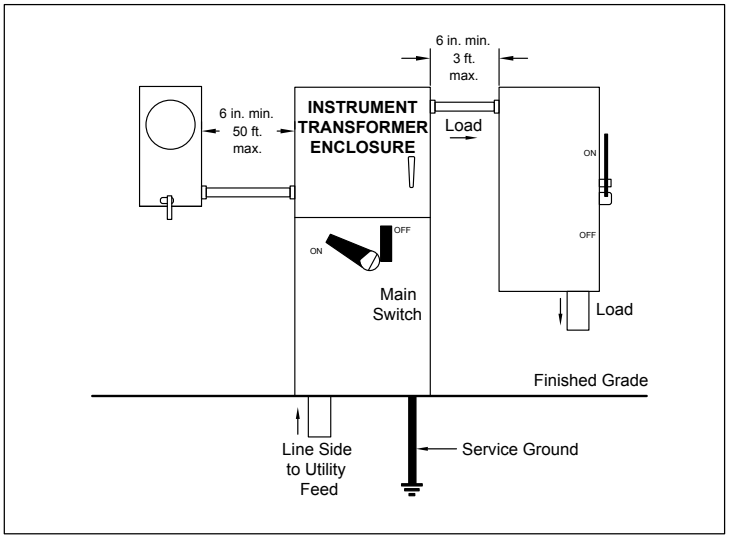

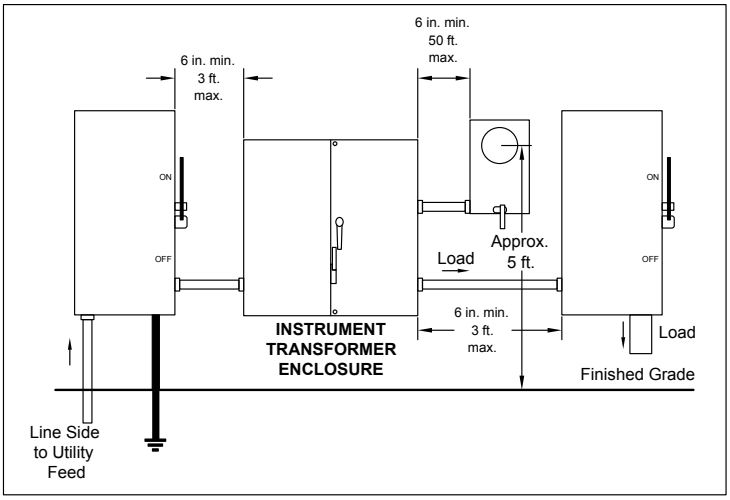

NOTES

1. Consult with the Company before beginning the design and before ordering equipment for any job requiring an instrument transformer (IT).
2. Encloser shall be National Electrical Manufacturers Association (NEMA) rated, 3R minimum.
3. Customer is responsible for providing and installing inside the Instrument Transformer (IT) cabinet:
    - An approved isolated neutral from the same manufacturer and a number 10 connector on the neutral.
    - Two number 10 grounding connectors.
4. Conduit from meter socket to IT cabinet shall be electrical grade schedule 40 PVC or galvanized steel. Conduit to be 1 ½ inch in diameter with a minimum length of 6 inches and a maximum length 50 feet.
    - If PVC, provide and install an equipment grounding conductor. Number 10 wire or larger.
5. Line box (LB) connections are not allowed.
6. A locking provision for the main breaker and IT in the off position is required.
7. A single load breaking switch with a visible break is required immediately after the utility IT.
8. If 480/277 volt equipment is installed, provisions must be supplied for mounting voltage transformers (VT) horizontally and in the same compartment as the current transformers (CT).

Meter Load Pulse Enclosure

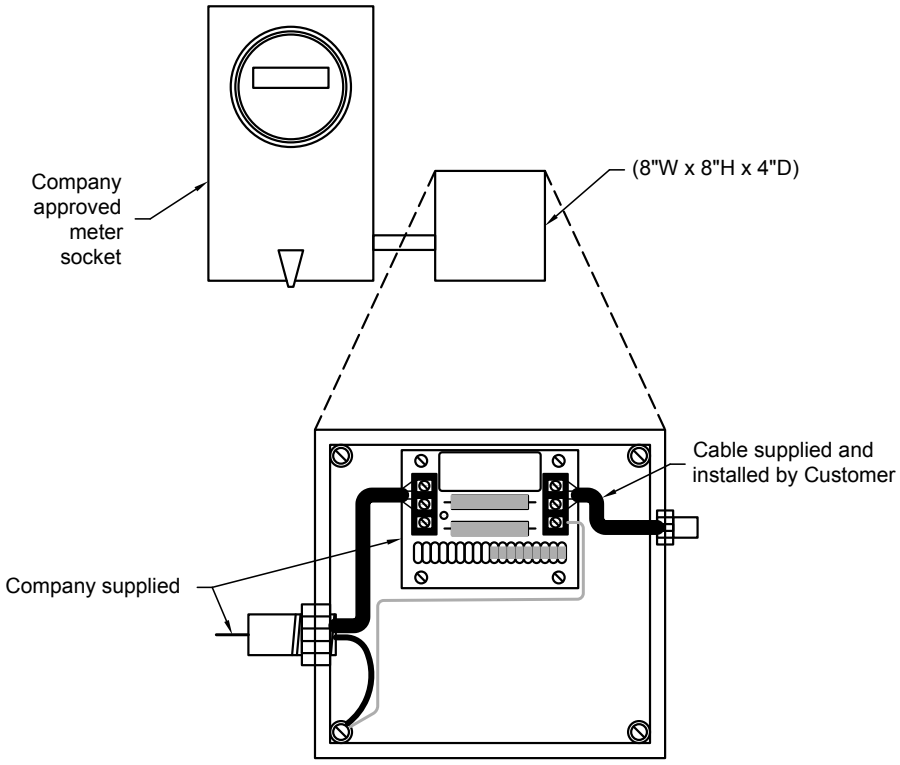

LOAD PULSE OUTPUT PROJECTOR (LPOP)

NOTES

1. The Company will supply and install the Meter Interface Enclosure and Load Pulse Output Protector (LPOP).
2. A LPOP is for kilowatt hour pulse measurement only.
3. Customer will provide wetting voltage no greater than 30 volts AC/DC.
4. Multiple units of measure require individual load pulse output protector relays.

Metering For Secured Locations

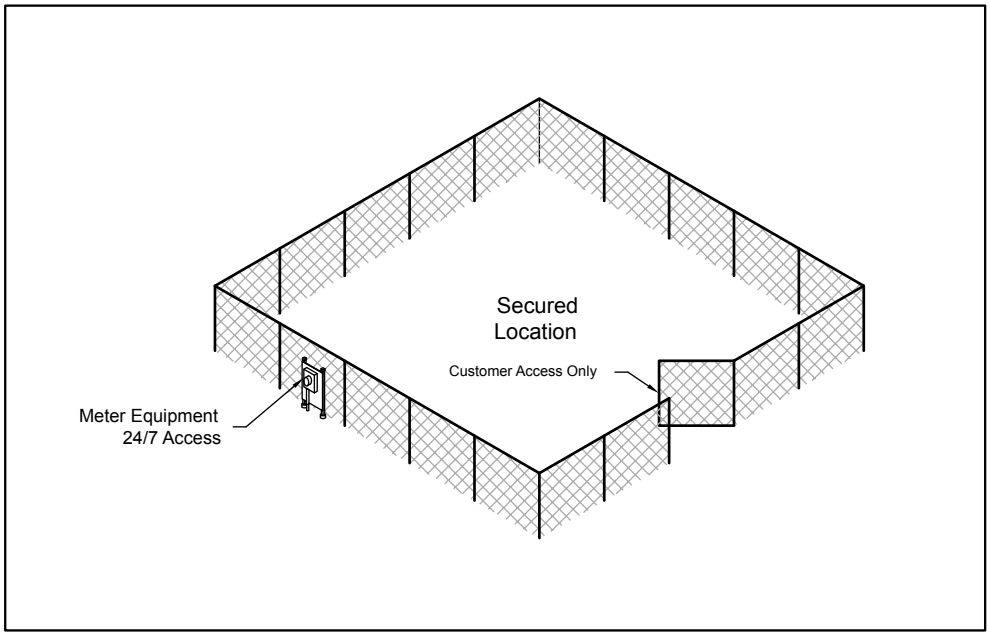

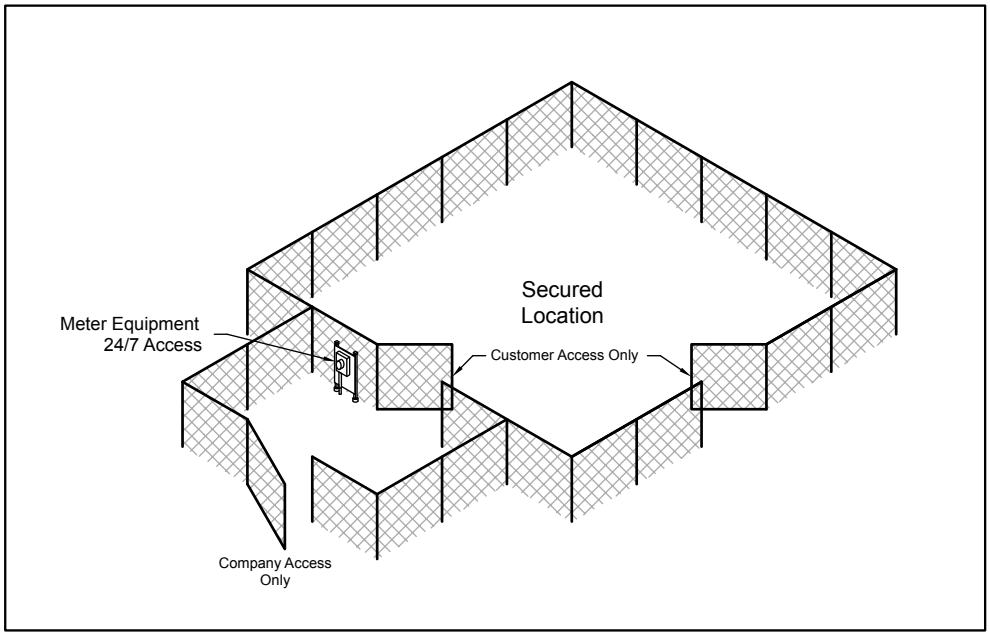

Modular Meter Panels For Group Metering

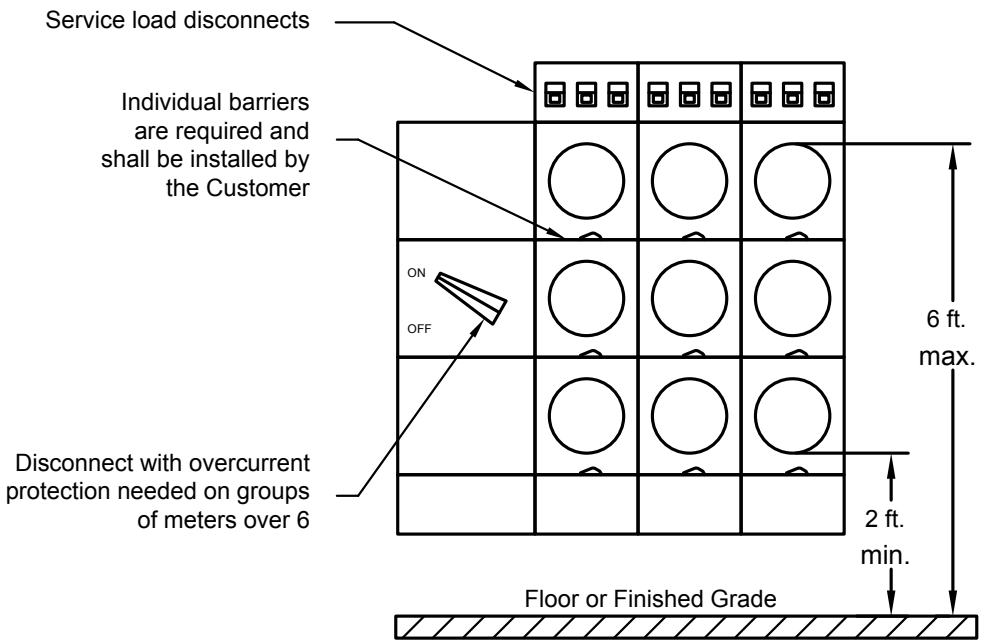

NOTES

1. Service load disconnects may be located above, below, or beside meter.
2. Individual meter sockets for meter packs require individual barriers to be purchased and installed by the Customer with provisions for seals and barrel locks.
3. For single and three phase 120/208 volt network and 277/480 volt services, the entire bank shall be cold sequenced.
4. When modular metering is 277/480 volts, each individual socket shall be cold sequenced.
5. Sketch of meter panel arrangements must be submitted to the Company for approval prior to layout and installation of equipment.
6. Refer to **Metering** for labeling requirements.
7. The grounding electrode conductor connection shall be made at an accessible location in the service equipment and not in the meter socket.
8. Bollards are required when there is a potential for damage by vehicles. Refer to **Metering** for required clearances.

Outdoor Instrument Transfomer Meter Socket With Test Switch

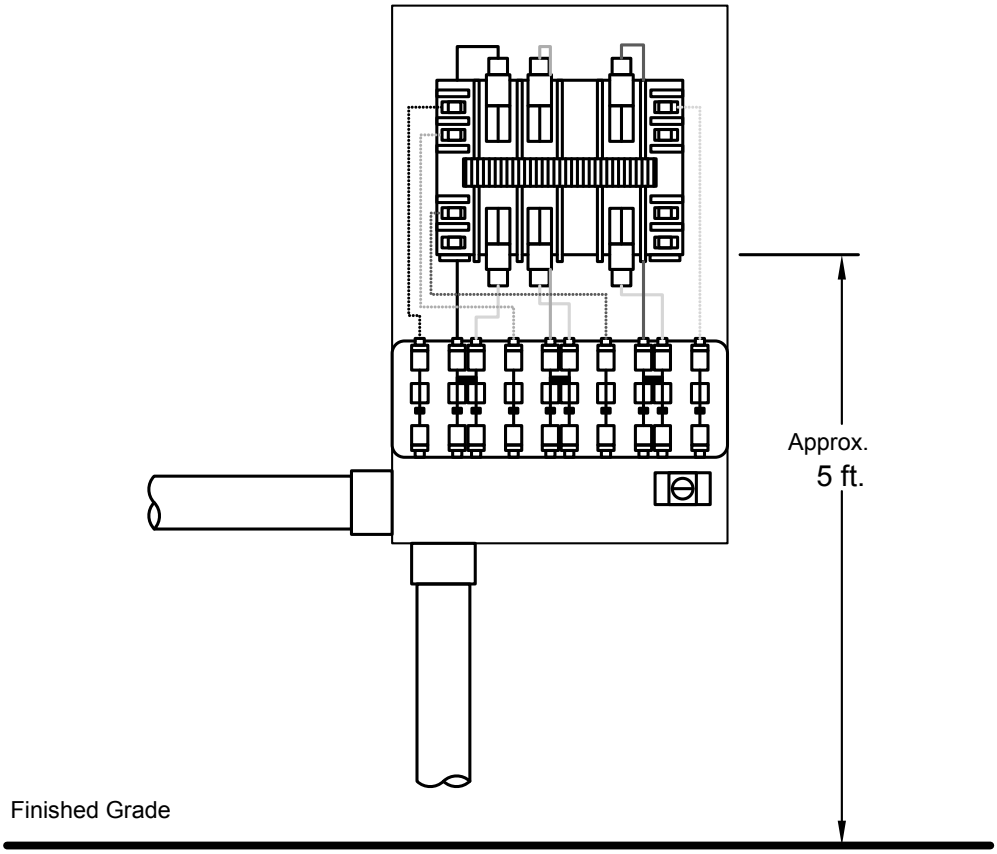

NOTES

1. Consult with the Company before starting design of any job where an instrument transformer (IT) installation is required.
2. Refer to approved meter socket list located at eversource.com.
3. Conduit from meter socket to IT cabinet shall be electrical grade schedule 40 PVC or galvanized steel. Conduit to be 1 ½ inch in diameter with a minimum length of 6 inches and a maximum length 50 feet.
    - If PVC, provide and install an equipment grounding conductor. Number 10 wire or larger.
4. Conduit is to be installed in the bottom of the meter socket only utilizing the manufacturer provided knockouts. Top feed is not allowed.
5. A slip joint shall be required if the conduit is fed from underground.
6. All conduit connections in the meter socket shall be weather tight.

Overhead Service Drop

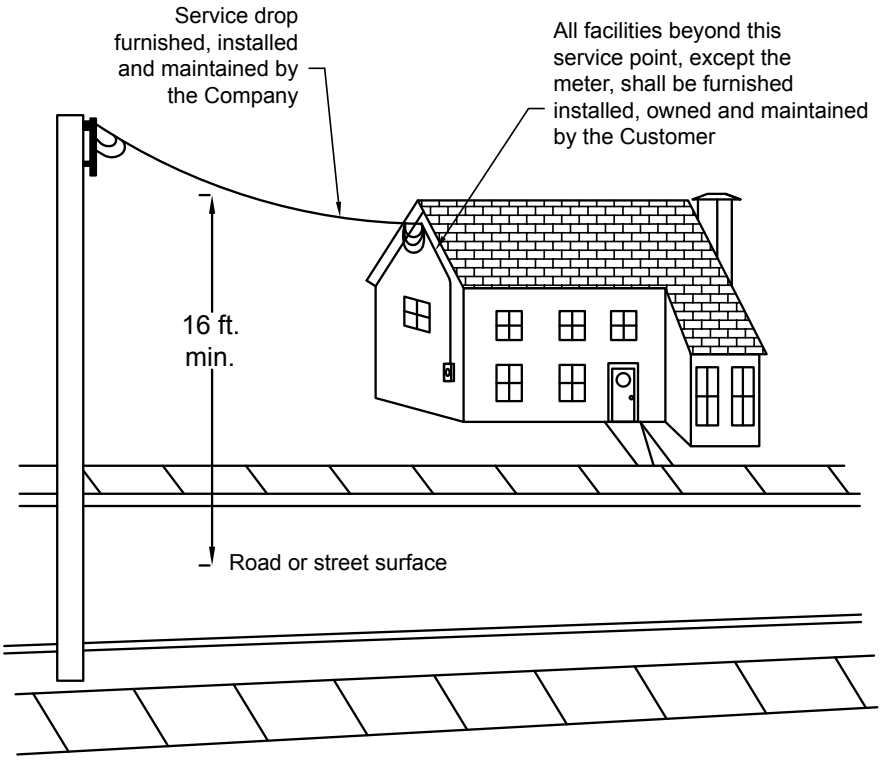

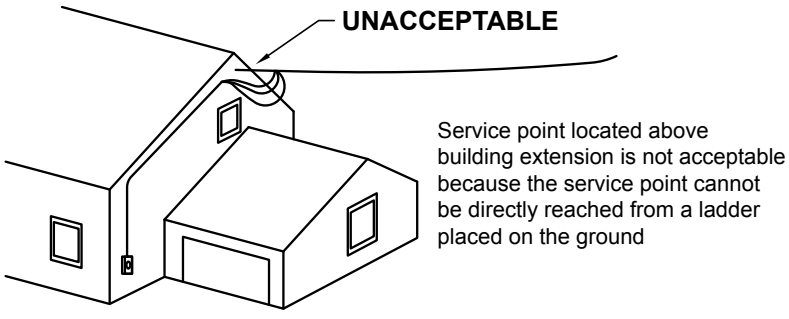

Overhead Service Entrance

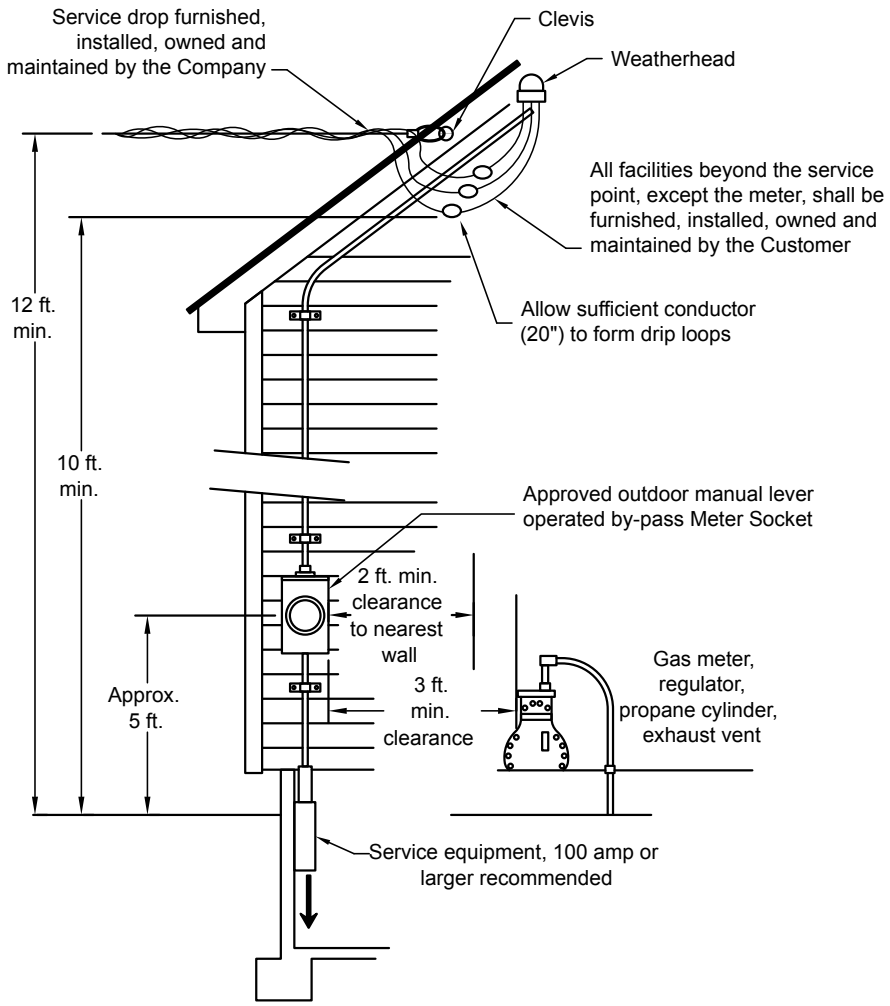

NOTES

1. Stud location for the Company clevis shall be marked by the Customer.
2. Contact the Company for a service attachment point exceeding 20 feet in height.
3. Contact the Company for a service exceeding 125 feet in length.

Permanent Built Meter Pedestal

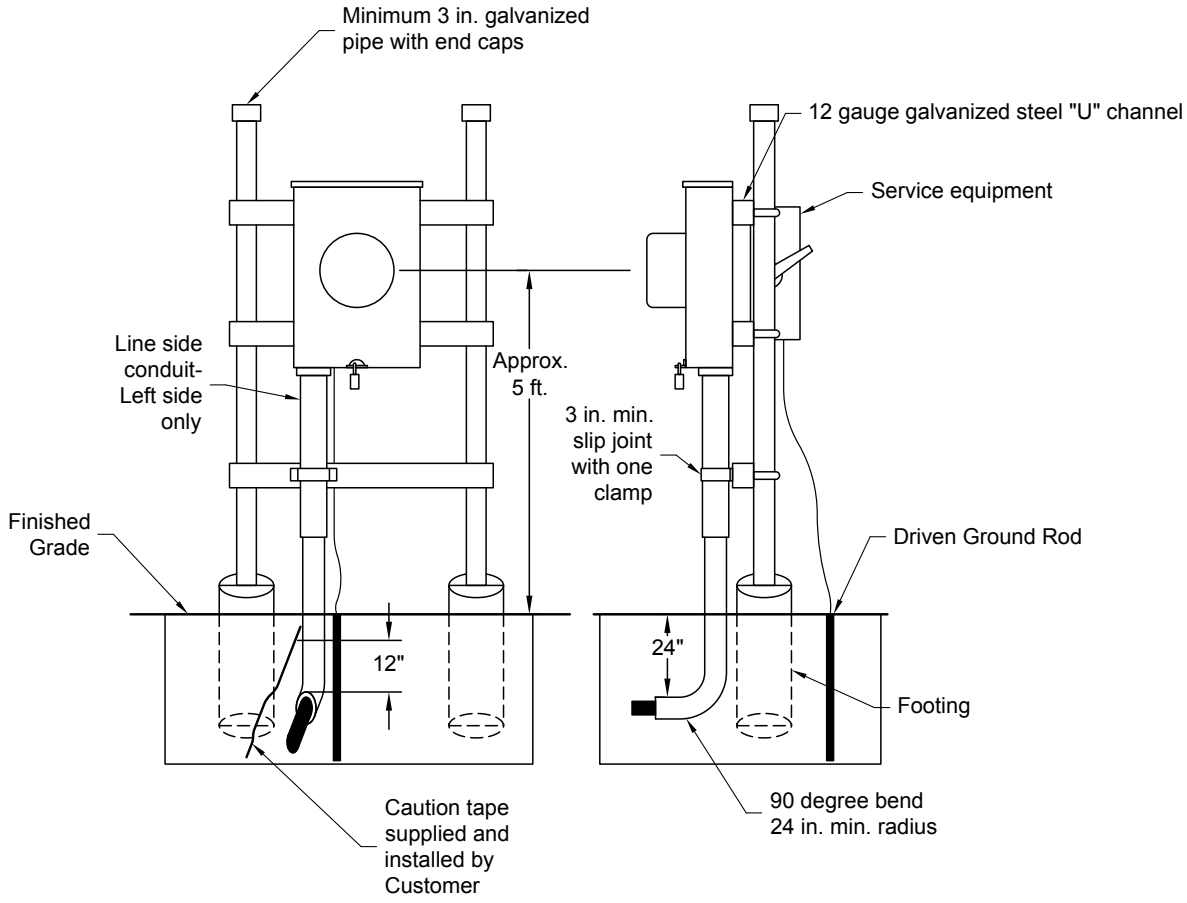

NOTES

1. Single phase 120/208 volt network, three phase 208Y/120 volt network, and three phase 480Y/277 volt services shall be cold sequenced.
2. Company shall provide service conductors to line side of meter socket.
3. Customer shall provide, own, and maintain approved conduit, load side conductors from the meter, and main disconnect.
4. Customer shall install 3 inch minimum schedule 40 PVC conduit for service conductors.
5. Customer provided caution tape shall be red plastic with black lettering. The warning message on the red plastic caution tape shall read: CAUTION – ELECTRICAL LINE BURIED BELOW.
6. Footing shall be a minimum of 8 inches in diameter with a depth no less than 4 feet, filled with concrete from bottom of hole to just above finish grade.

Permanent Manufactured Meter Pedestal

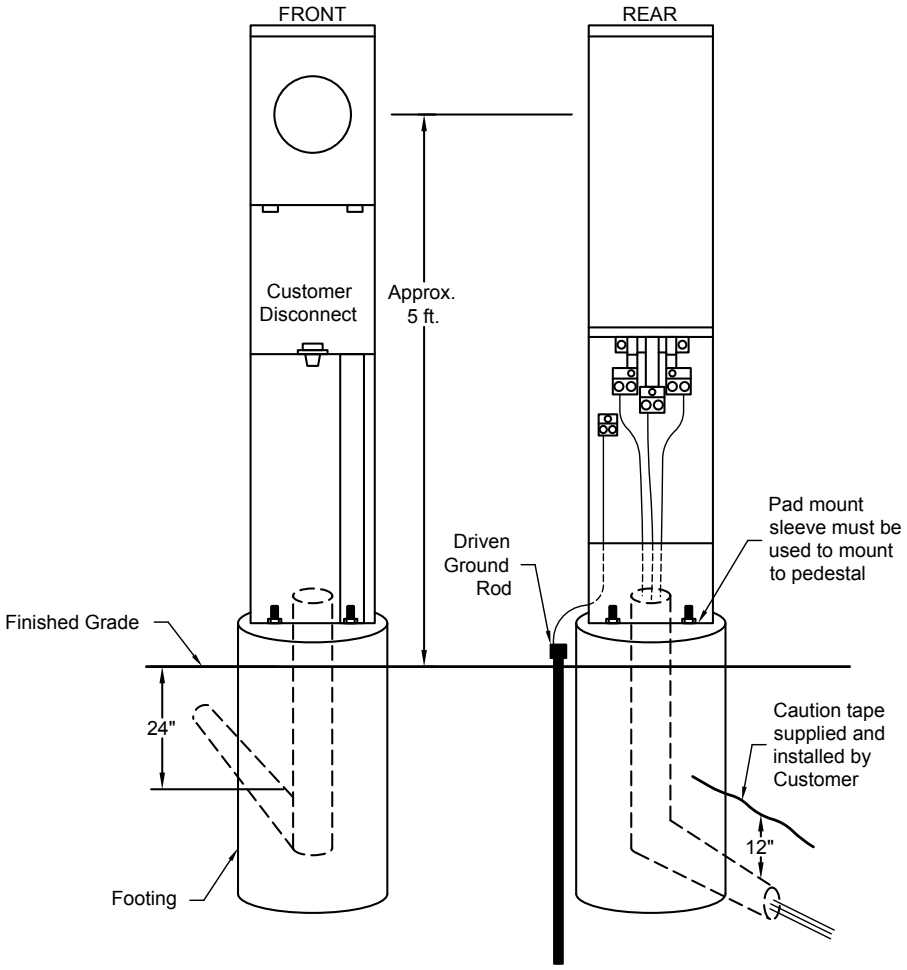

NOTES

1. This applies to single phase 120/240 volt services only.
2. Refer to approved meter socket list located at eversource.com.
3. Company shall provide service conductors to line side of meter socket.
4. Customer shall provide, own, and maintain approved conduit, load side conductors from the meter, and main disconnect.
5. Customer shall install 3 inch minimum schedule 40 PVC conduit.
6. The footing shall be a minimum of 8 inches in diameter with a depth no less than 4 feet, filled with concrete from bottom of hole to just above finish grade.
7. Customer provided caution tape shall be red plastic with black lettering. The warning message on the red plastic caution tape shall read: CAUTION – ELECTRICAL LINE BURIED BELOW.

Permanent Multi-Gang Meter Pedestal (Includes Cell Cites)

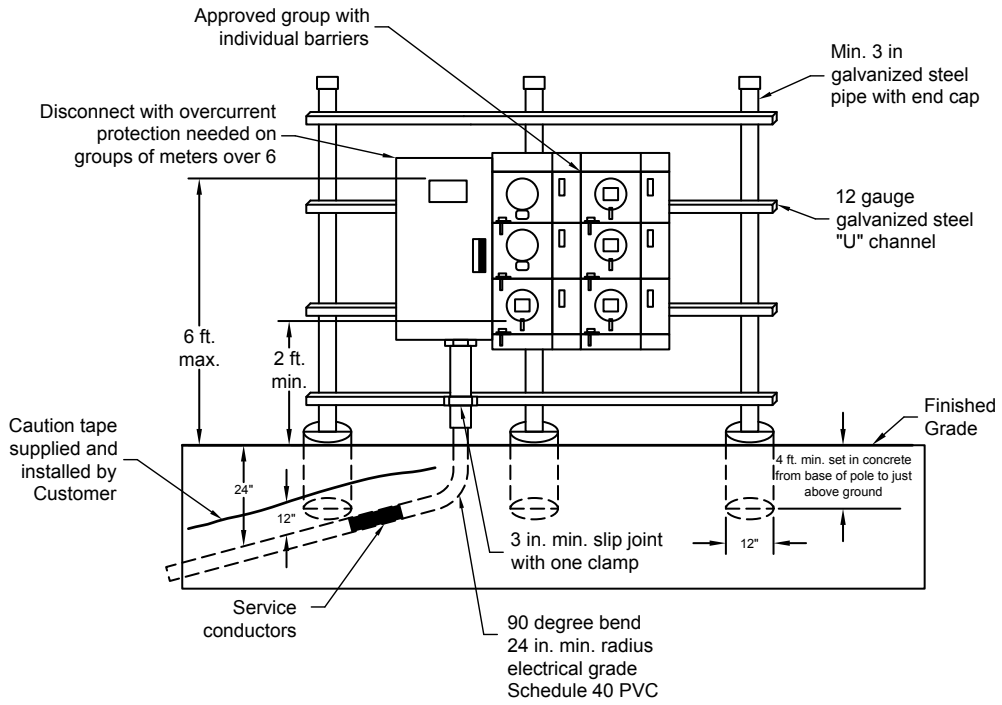

NOTES

1. A Company approved meter and equipment location is required prior to the start of customer construction.
2. Meter equipment shall be located outside of secured or enclosed areas.
3. All network 208Y/120 volt services and 480Y/277 volt services shall be cold sequenced.
4. Main disconnect shall be service rated for the appropriate AIC (ampere interrupting capacity).
5. Three phase 480Y/277 volt services shall be individually cold sequenced per each meter position.
6. Refer to **Metering** for labeling requirements. All meter labeling shall be in place as per requirements prior to meter installation.
7. Customer shall install 3 inch minimum schedule 40 PVC conduit for service conductors.
8. Footing shall be a minimum of 8 inches in diameter with a depth no less than 4 feet, filled with concrete from bottom of hole to just above finish grade.
9. Customer provided caution tape shall be red plastic with black lettering. The warning message on the red plastic caution tape shall read: CAUTION – ELECTRICAL LINE BURIED BELOW.
10. Bollards are required when there is a potential for damage by vehicles. Refer to **Metering** for required clearances.

Remote Communications Power Site - Typical

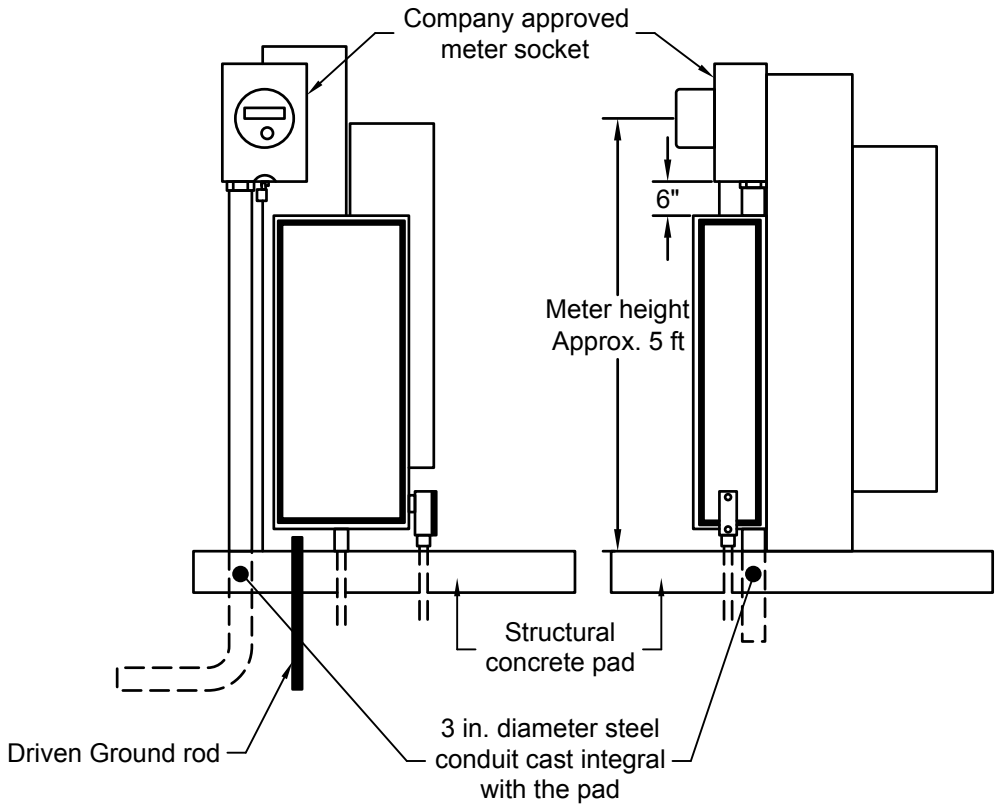

NOTES

1. Company approval required prior to construction or installation.
2. A slip joint is not required when the steel conduit is integrated with the concrete pad.

Self-Contained Meter Socket Sequence and Mounting Arrangement

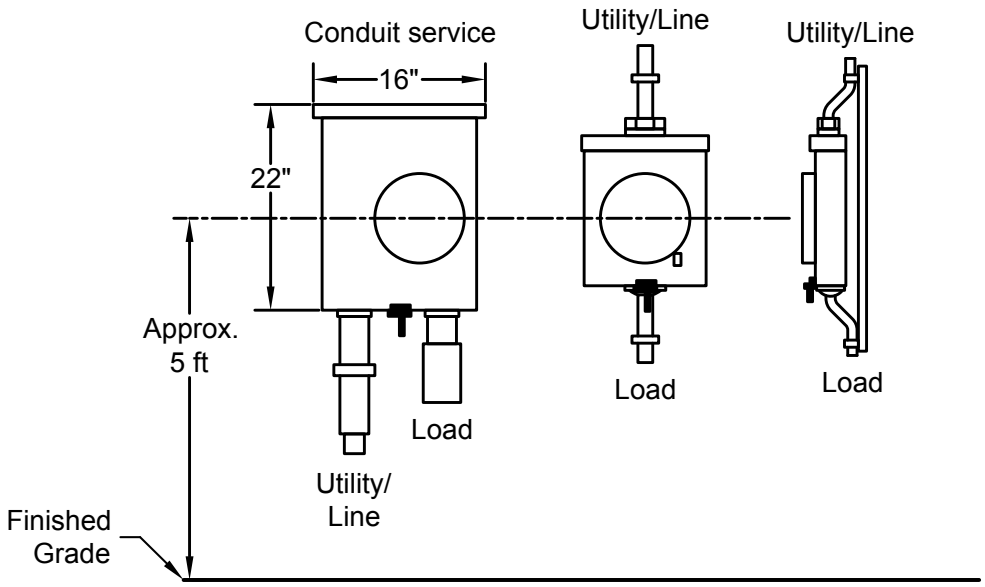

NOTES

1. Network and 480Y/277 volt services require a main disconnect ahead of the meter (cold sequence).
2. Self-contained meter sockets are required. Refer to **Article 611**.
3. Meter socket shall be located outside. For required meter clearances, refer to **Electric Equipment Ownership and Required Meter Clearances**.
4. The grounding electrode conductor shall not run through the meter socket. Refer to **Hot and Cold Sequence Metering**.
5. Overhead meter socket requires a weatherproof hub.
6. Slip joint for conduit service shall be installed on the left side of the meter socket only.

Service Mast

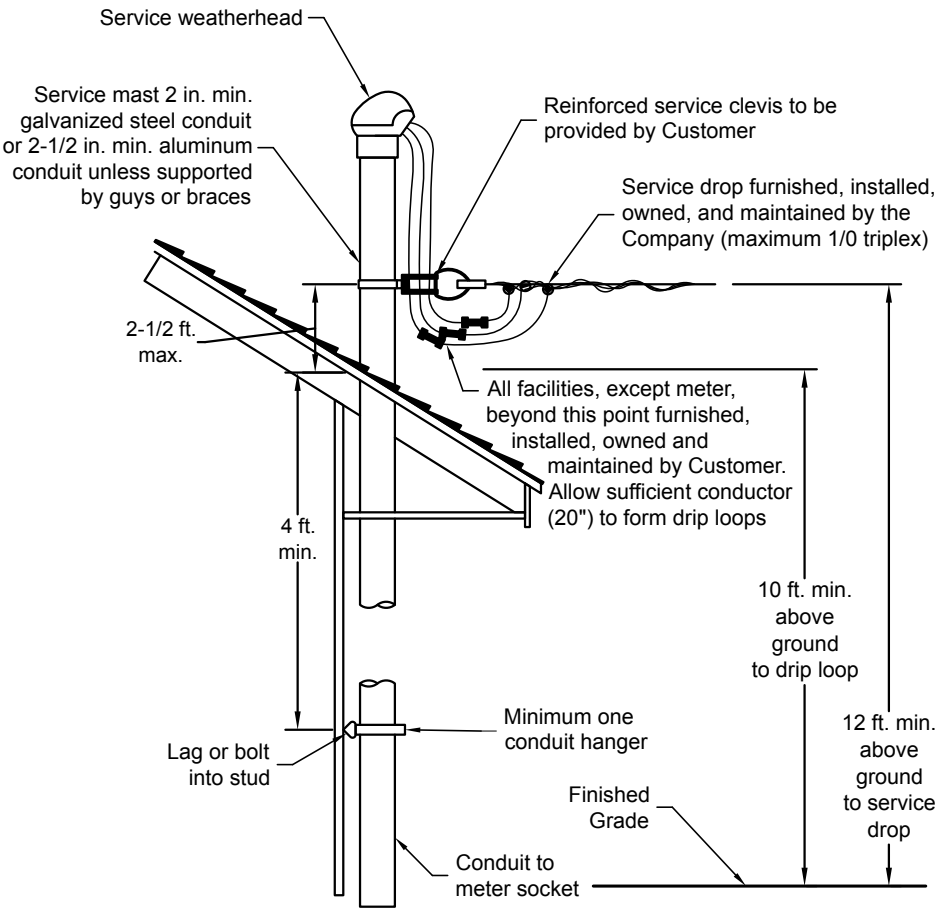

NOTES

1. Only electric service drop conductors shall be attached to service mast. No telephone, cable, or other conductors allowed.

Single Phase Self Contained Metering Connections

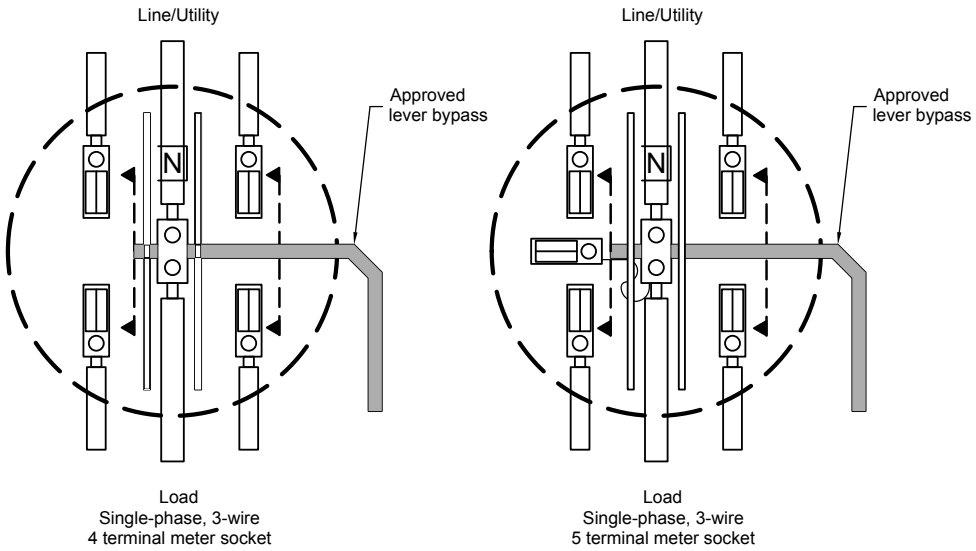

NOTES

1. Refer to approved meter socket list located on eversource.com.
2. When using the fifth terminal kit it shall be the same manufacturer as the meter socket and installed per manufacturer instructions in the 9 o'clock position.
3. When a cold sequence disconnect is required, it shall be within 3 feet of the meter socket.
4. Any new or upgraded service (200 amps or less) in the downtown network area in Hartford shall have a 5 terminal meter socket installed even with a 120/240 volt service.
5. For Company 120/208 volt underground network areas, consult with the Company.
6. Refer to **Article 611** for Company allowed single phase services.

Temporary Electric Service - Conduit System

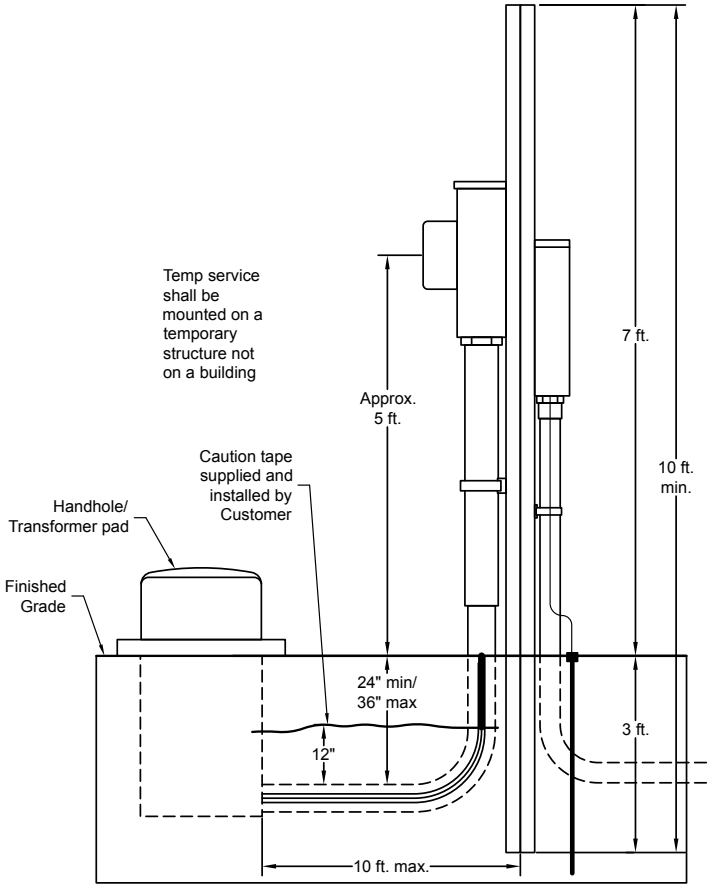

NOTES

1. A temporary electric service shall be in service no longer than one year.
2. The Company shall install conductors for a customer erected temporary electric service that meets the requirements included here.
3. Location of the temporary service pole shall be specified by the Company.
4. Timber shall be structural grade fir or pine with cross section not less than nominal solid 6 inch x 6 inch or 2 inch by 6 inch spiked together on 8 inch centers.
5. Temporary service timber is to be at least 10 feet long and set a minimum of 3 feet in firm ground with well tampered backfill.
6. There shall be no excavation near the temporary service timber which may reduce its stability.
7. A Company approved manual lever operation bypass meter socket is to be installed approximately 5 feet above ground.
8. Outdoor type service equipment rating must be installed on the load side of the meter socket and within 12 feet of an approved meter socket with ground fault interrupter protection.

Temporary Electric Service - Conduit System
continued

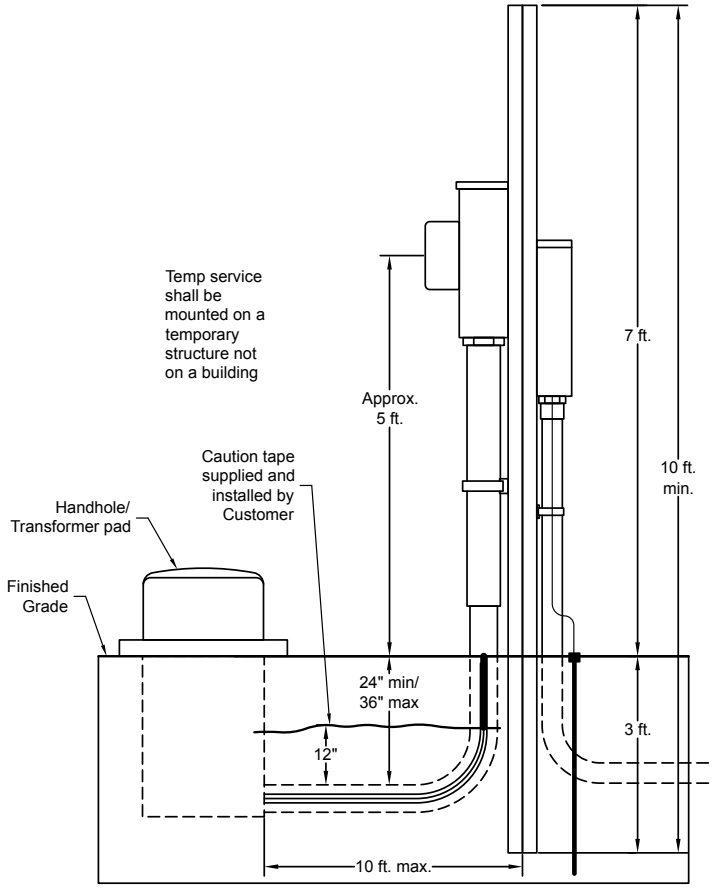

NOTES

9. Electrical grade schedule 40 PVC conduit shall be supplied by the Customer.
10. Conduit will be listed and labeled for direct burial and above ground use.
11. Pipe strap or clamp and minimum 3 inch slip joint required.
12. Customer provided caution tape shall be red plastic with black lettering. The warning message on the red plastic caution tape shall read: CAUTION – ELECTRICAL LINE BURIED BELOW.
13. Opening existing electrical structures such as handholds, transformer pads or switch vaults, when installing the pulling line is prohibited.
14. Suitable backfill shall not contain ash, cinder, shell, frozen material, loose debris, or stones larger than 2 inch maximum dimension.
15. All conduit shall be inspected by the local municipal authority prior to backfilling.

Temporary Electric Service - Overhead System

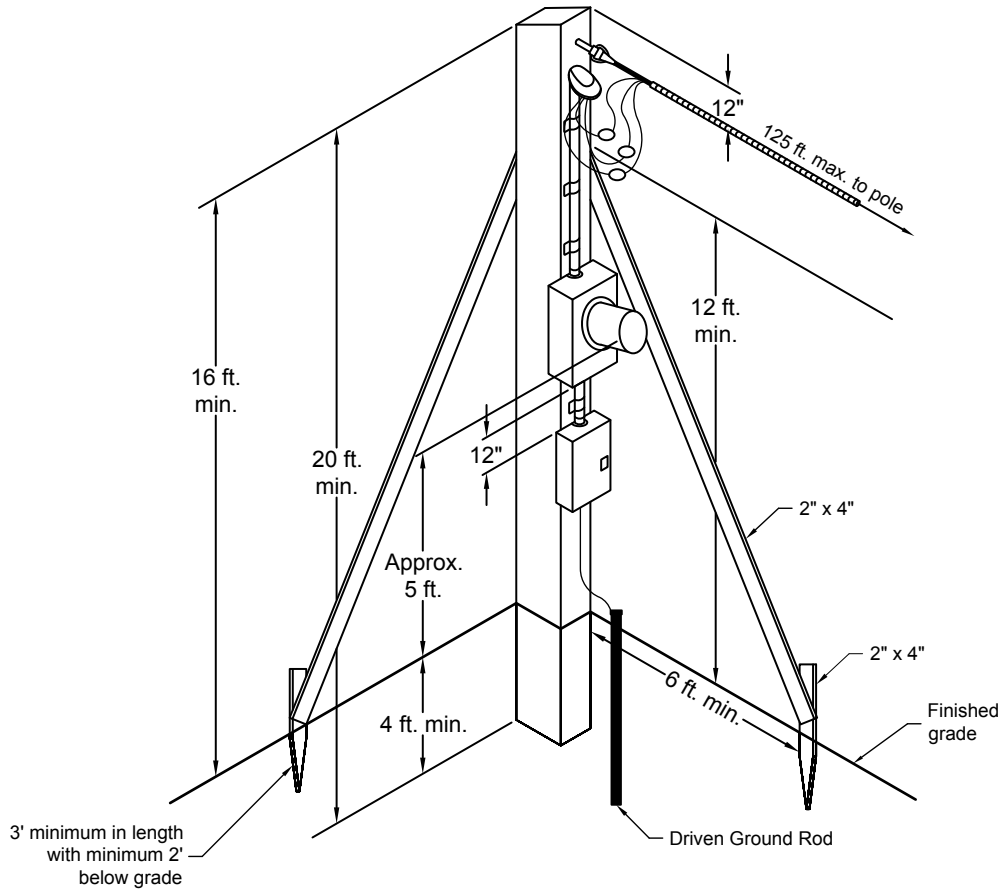

NOTES

1. A temporary electric service shall be in service no longer than one year.
2. There are additional charges if the service drop will not be transferred to a permanent location.
3. The Company shall dead end its service drop for temporary service on a pole or timber to be erected by the Customer that meets the requirements included here.
4. The location of the temporary service pole or timber shall be specified by the Company and not exceed 125 feet measured from the Company pole to the Customer pole.
5. The timber shall be structural grade fir or pine with cross section not less than nominal solid 6 inch x 6 inch or 2 inch x 6 inch spiked together on 8 inch centers (one solid piece of wood) to be 20 feet minimum.
6. Additional length may be required in order to provide a 16 foot service drop clearance over finish grade of 16 feet minimum.
7. The temporary service pole or timber is to be set a minimum of 4 feet in firm ground with well tampered backfill.

Temporary Electric Service - Overhead System
continued

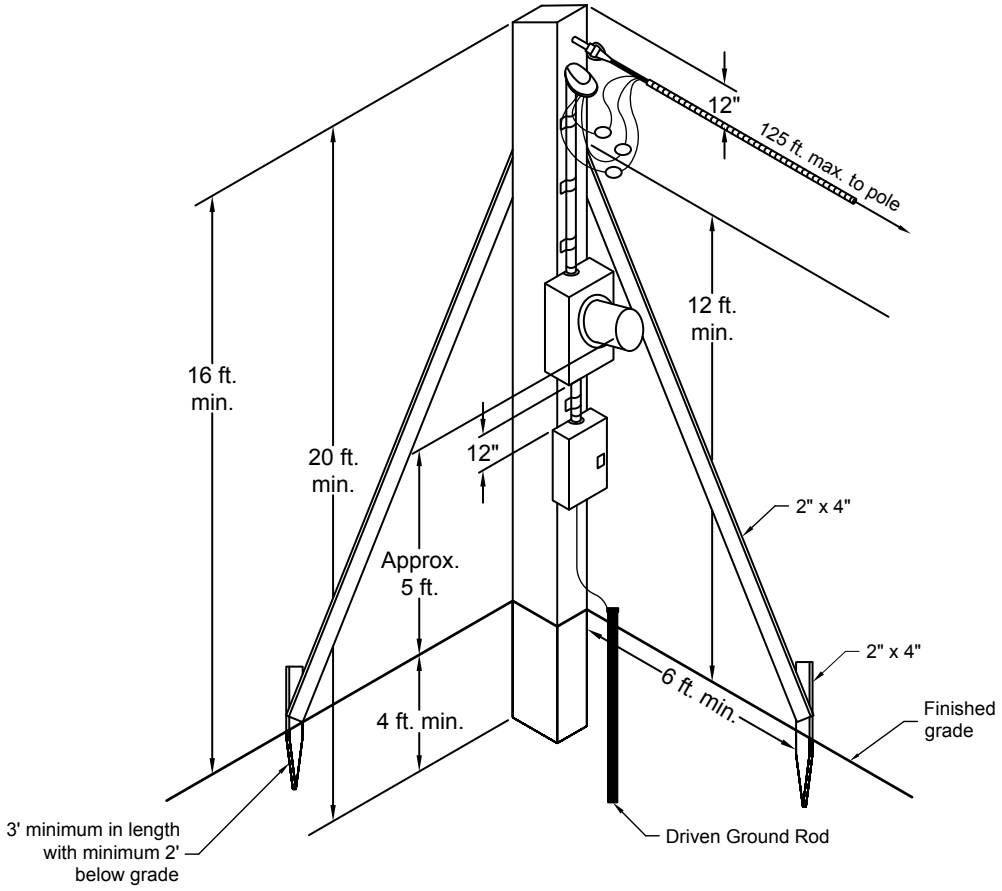

NOTES

8. The temporary service pole or timber is to be adequately braced to support at its top both a man on a ladder and a service drop tension of 600 pounds. A minimum of two 2 inch by 4 inch braces at right angles to each other with one in line with the service drop shall be installed.
9. Braces are to be well spiked flat against the side of the pole at least 12 feet above ground and to solidly driven 2 inch by 4 inch stakes 3 feet minimum located a minimum of 6 feet from the service pole.
10. There shall be no excavation near the temporary service pole or its braces which may reduce stability.
11. A weatherhead is to be installed approximately 12 inches from top of pole and 14 feet minimum above ground.
12. An approved manual lever operated bypass meter socket is to be installed. No grounding electrode conductor shall be run in the meter socket.

Three Phase Self Contained Metering Connections

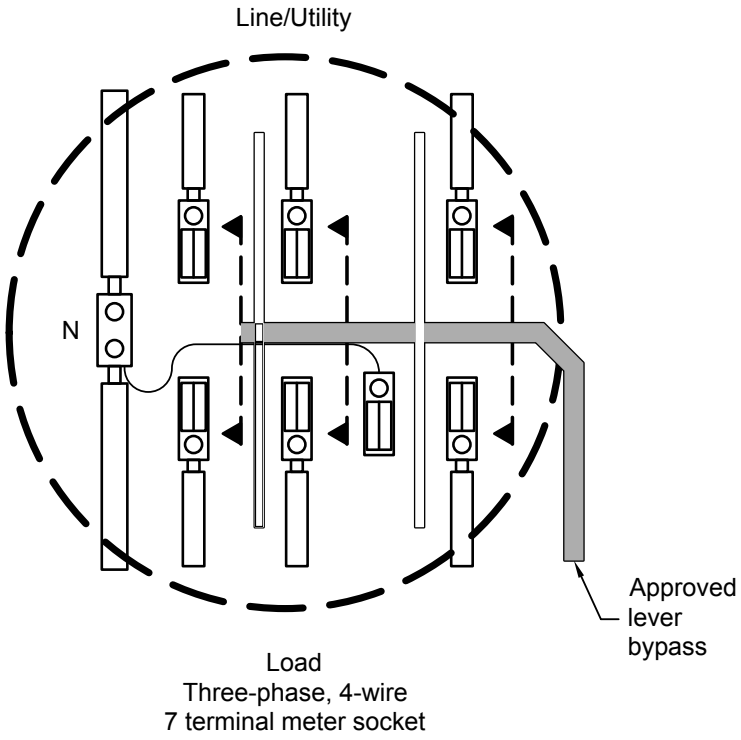

NOTES

1. Refer to approved meter sockets list located at eversource.com.
2. The grounding electrode conductor connection shall be made at an accessible location in the service equipment, and not in or through the meter socket.
3. All three phase network 120/208 or 277/480 volts shall have a main disconnect with over current protection ahead of the meter (cold sequence).
    - Neutral isolation shall be installed for all cold sequence metering.
    - The disconnect shall be on the same wall and no greater than 3 feet from the meter socket.
    - The main disconnect shall be service rated for the appropriate AIC (ampere interrupting capacity).

Transfer Switch Installation in Conjunction with Auxiliary Supply

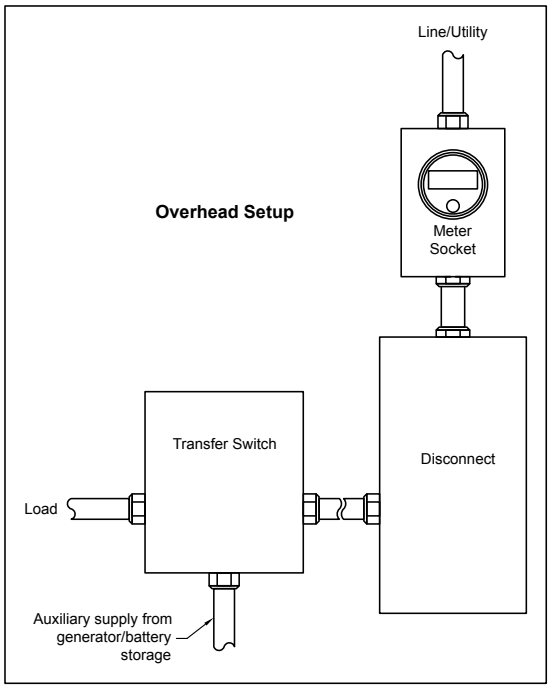

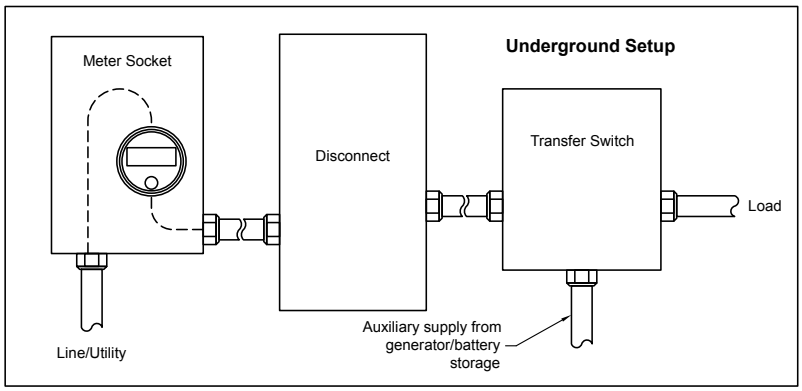

NOTES

1. Break before make type transfer switch is required.
2. There shall be no splices inside the meter socket.
3. Meter socket shall not be used as a race way. Conductors for load must be fed through a separate conduit and not through the meter socket.
4. Customer auxiliary wiring shall not terminate in or travel through the meter socket.

Trenching Requirements for Service or Secondary Line

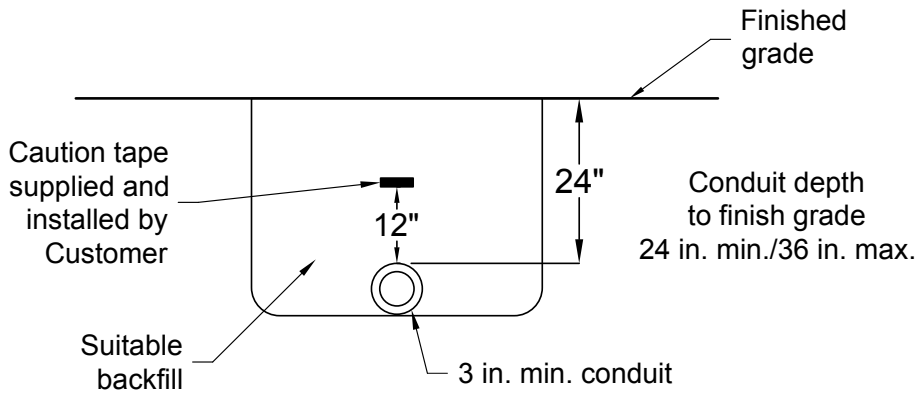

NOTES

1. Trench shall not be installed over septic tanks or fields and shall maintain 2 feet of clearance from septic lines, and 5 feet of clearance from septic fields.
2. Electrical grade schedule 40 PVC conduit shall be sunlight resistant and suitable for direct buried and above ground use.
3. Horizontal clearance from other utilities shall be 12 inches minimum or more, as necessary to permit access for maintenance and without damage to other utilities.
4. Vertical crossing clearance shall be constructed and supported to ensure the upper facility will not transfer harmful load onto any lower facility. There shall be adequate vertical clearance to permit access for maintenance of all facilities without damage. In general, 12 inches is considered adequate separation.
5. Fuel (gas and oil) and water lines shall be no closer than 18 inches in all directions.
6. Customer provided caution tape shall be red plastic with black lettering. The warning message on the red plastic caution tape shall read: CAUTION – ELECTRICAL LINE BURIED BELOW.
7. Suitable backfill shall not contain ash, cinder, shell, frozen material, loose debris, or stones larger than 2 inch maximum dimension.
8. All service conduit shall be inspected by the local municipal authority prior to backfilling.

Article 100-104 | Section 1 — General Information

100. These requirements have been developed to ensure reliable and adequate service to the user of electricity and to improve communication and coordination between Customers, Contractors, Architects, Engineers, Civic Planning Groups, and the Company. These requirements supplement the Company's New Business Polices and Tariff and contain the most recent revisions (at the time of publishing) to the Company's Construction and Meter Standards.

101. The character of electric service made available in accordance with rate provisions will differ to some extent from one location to another on the Company's system. Customers, Contractors, Architects, Engineers, and Civic Planning Groups should therefore determine from the Company the types of service available for any new installation and for any existing installation which is to be enlarged or modified.

102. It is impractical to attempt to cover in a booklet of this type all Company approved standards or all of the conditions and problems which may be encountered in various installations. Accordingly, Customers, Contractors, Architects, Engineers, and Civic Planning Groups are strongly urged to make use of the advisory services available through the Company without charge or obligation. Electric distribution system design services and meter design services after the initial design (i.e., redesign at a Customer's request or due to municipal requirements), and inspections after a failed inspection may be billed to the Customer, unless the failed inspection was caused by the Company design.

103. With respect to Customer's wiring and electrical installations, no requirement, interpretation, or standard specified in this booklet is intended to supersede or conflict with the standards and regulations of the National Electrical Code, or with any state or municipal law, rule, or ordinance now in force or hereafter enacted or promulgated. The Company shall have no obligation to determine whether or not the Customer's wiring and electrical installations are proper and safe or comply with the National Electrical Safety Code or any other code or regulation in effect at the Customer's location. However, if it should come to the Company's attention that the Customer's wiring and electrical installations are not proper and safe, or do not comply with such codes, the Company shall have the right to refuse or discontinue service. In all municipalities which require permits and/or certificates of inspection for electrical work, it shall be the responsibility of the Customer or Contractor to obtain such documents from the proper authorities and provide copies to the Company before electric service is provided. The Company will not energize a service until it is approved by the local municipal authority, and it meets the requirements of this booklet.

104. Safe and adequate access shall be maintained to Company owned equipment located on a Customer's premises. The Company shall have free right to enter the Customer's premises to enable the Company to install, read, inspect, repair, remove, replace, disconnect, or otherwise maintain its meters, equipment, facilities, and for all other proper purposes. The access area must be clear of obstacles and capable of carrying heavy vehicles and equipment if required. The Company is not responsible for restoring trees, shrubs, and/or grass if damage is caused due to inadequate access. The Customer, if a tenant, shall authorize and request the landlord to permit the Company to enter said premises. If safe and adequate access to the meter is not available for the Company's employees, the Company reserves the right to discontinue service upon proper notice. The Customer shall not permit access to the Company's meters, equipment, and facilities located on the premises by other than an authorized representative of the Company or of the Public Utilities Regulatory Authority. In case of loss or damage to Company property on the Customer's premises due to Customer negligence, the Customer shall pay to the Company the value of such property or the cost of repairs.

Article 105-112 | Section 1 — General Information

105. All employees authorized by the Company to visit the Customer's premises are required to carry means of identification which will be shown upon request. The Company will be responsible for the actions and workmanship of such employees.

106. Should the use or operation of any equipment by a customer including but not limited to electric motors, welders, electronic power supplies, speed controls, or distributed generation adversely affect the Company's ability to render adequate service to others, the Company reserves the right to discontinue service until suitable corrections are made by the Customer.

107. The Company reserves the right to install protective apparatus so arranged as to disconnect or limit service to the Customer if the Company's capability to render service at the point of delivery is exceeded.

108. The Company will make or cause to be made, application for any necessary street permits or licenses for its facilities and will not be required to make electricity available on the premises of the Customer until a reasonable time after such permits or licenses are granted.

Construction of lines on or across private property will be done only if the Customer provides, without expense or cost to the Company, the necessary permits, easements, and consents for a satisfactory right-of-way for the erection, maintenance, and operation of a line to be used exclusively to serve the Customer. The Customer shall also be responsible for any on-going fees associated with any required permits or consents for rights-of-way located on or across private property. All Company owned equipment located on private property such as poles, conductors, meters, instrument transformers, auxiliary metering equipment, transformers, ducts, etc., shall remain Company property and may be removed by the Company in the event such equipment is no longer needed. The Company shall be responsible for the construction and maintenance of all electric distribution facilities to serve the customer's premises, as specified in the Company's Tariff.

109. The actual cost to the Company for moving meters and services shall be billed to the Customer in the following cases:

(a) If a meter or service is relocated on the same premises at the request of the Customer.

(b) If a meter or service is discontinued or removed temporarily at the request or for the convenience of the Customer.

(c) When the cost of covering, instead of moving or temporarily removing a service exceeds 1 crew hour, the excess cost to the Company shall be billed to the Customer.

110. The cost of installing and removing a temporary overhead or underground service, which is not converted to a permanent service, shall be billed to the Customer.

111. The distribution and meter standards included in this booklet are not all inclusive of Company standards. Because distribution and meter standards are revised periodically and are subject to **Article 103**, the standards in this booklet may be obsolete. Any person who is uncertain or has a question as to the latest standard applicable should **Contact Us** at the Electric Service Support Center.

112. Installation of oil filled equipment within 400 feet of public or community water systems are subject to special requirements. Customers, Contractors, Architects, Engineers, and Civic Planning Groups should determine from the Company the requirements applicable to any new installations and for any existing installation which is to be enlarged or modified. The Company's requirements were developed based on Connecticut Department of Environmental Services rules. Excess costs for the associated equipment shall be billed to the Customer. Consult with a Company representative prior to starting projects with impacts in environmentally sensitive locations.

Article 113-125 | Section 1 — General Information

113. When changes, alterations, or additions to an existing building structure affect the attachment of service entrance equipment, the attachment point and installation, the changes must conform to the current requirements outlined in this booklet and applicable codes. No structures such as decks, sidewalks, or swimming pools shall be constructed over buried service equipment.

114. Connecticut State Law allows homeowners to perform electrical work on a single family, owner-occupied residence only. Homeowners have two options to complete work. Refer to **Residential Cut and Reconnect Policy**.

115. The purpose of Company inspections is to ensure Company requirements outlined in this booklet are met. Company inspections of customer facilities or wiring is not an approval of conformance to applicable codes.

116. Connecticut General Statutes prohibit theft of electric service. Theft of electrical service is defined as the taking or acceptance of electric service without the knowledge or consent of the Company. This includes any method or device used by any person(s) which prevents an electric meter from accurately registering the quantity of electricity supplied by the Company. Theft of electric service is unlawful, unsafe, and can result in serious injuries, electrocution, fires, explosions, and death. Where there is evidence of meter tampering and/or diversion of electric service, such person, or persons responsible shall be liable for criminal prosecution under the penalty of all applicable laws. All lost revenue, intended or unintended, is subject to recovery by the Company.

To report suspected meter tampering or diversion of electric service, call the Company confidential energy theft hotline at 1-800-286-5350. Callers will not be asked to identify themselves.

117. Connecticut State Law House Bill 6292 is an act ensuring the safety of vacant buildings. The Company shall abide by House Bill to resume delivery of electricity at locations where the circumstances apply. Refer to the State of Connecticut House Bill No. 6292. Public Act No. 03-214.

118. An electric service request shall be submitted for any new, relocated, upgraded, changed, removed or temporary service, including load data prior to starting the work. The service request process provides a method for responding to and processing requests in advance to allow for proper planning.

119. To initiate a service request, check on the status of an existing request, and obtain additional information, visit eversource.com or **Contact Us** at the Electric Service Support Center.

120. When a service request is received, the Company will determine the type of service based on the location, size, and character of the proposed load.

121. When a service request is received, the Company will designate an approved outside service location. New service locations are typically on the front of the building and on the side adjacent to Company's distribution facilities.

122. When a service request is received, the Company will specify the location and requirements for metering equipment. Refer to **Metering**.

123. When a service request is received, the Company will advise of any advance charges and customer contributions.

124. When a service request is received, the Company will provide available fault current for the specific installation.

125. When a service request is received, the Company will advise of any special requirements.

Article 126-137 | Section 1 — General Information

126. Service installation requests involving special conditions due to size of load, physical limitations, rate application, environmental considerations, or other special requirements shall be subject to review and agreement with the Company.

127. Attachment of non-Company equipment to Company owned poles is generally not allowed. Requests to install non-Company equipment to a Company owned pole such as cameras, speed limit signs, lights, or sensors require a service request, Company review, and approval. When required, coordination with telephone, cable, or other utilities is the customer's responsibility.

128. Normally, only one service will be installed to a single building or structure.

129. Multiple services of the same voltage to one building or structure will not be permitted without written approval from the local municipal authority having jurisdiction.

130. Each service will be separately metered and will be billed as serving a separate customer under the appropriate rate.

131. The Company or its agents shall install, operate, and maintain all Company owned equipment.

132. The Company will not maintain or operate customer owned equipment.

133. With the exception of jobs that meet the **Residential Cut and Reconnect Policy** criteria, all connections and disconnections between Company owned facilities and Customer owned facilities shall be performed by the Company or its agents.

134. With sufficient advance notice, the Company will temporarily disconnect an overhead or underground service to allow for maintenance work on the load side of the service. Customer billing may apply.

135. The Company will temporarily disconnect a service at no charge to allow for siding, painting, or tree removal work. **Contact Us** at the Electric Service Support Center to schedule an appointment. Customer billing may apply for requests that fall outside of normal business hours.

136. The Company will remove electrical facilities once the Removal of Service Building Demolition or Construction form is received in usable format from the property owner, as per Connecticut State law. The building owner is responsible for providing the Company with safe access. If the property includes separately metered tenants, the form shall be notarized. The form is available at eversource.com or **Contact Us** at the Electric Service Support Center.

137. A "repair", emergency or non-emergency, that involves the replacement of service equipment is considered a change and requires a service request, permit, and any required municipal inspection. This includes the meter socket, service entrance conductors, conduit, and mast.

If an emergency arises after business hours, weekends, or holidays it is permissible to perform repairs or replacement however, the electrical contractor must initiate a service request and obtain a municipal inspection within 10 business days.

Section 2 — Residential Cut and Reconnect Policy

The Residential Cut and Reconnect Policy is restricted to two-wire 120 volt, three-wire 120/240 volt or three-wire 120/208 volt single-phase overhead residential services of 400 amps or less.

Definitions

Licensed Electrician - a Master electrician holding a valid E-1 or E-9 license issued by the State of Connecticut. Department of Consumer Protection - Occupational & Professional Licensing Division. The Licensed Electrician (hereinafter referred to as the electrician) is responsible for all work performed under this policy.

E-2 License - an E-2 license holder can only perform electrical work while under the employ of a contractor licensed for such work.

E-9 License - an E-9 license-holder is restricted to residential and light commercial work only.

Authority Having Jurisdiction – a duly appointed building code official (formerly referred to as Local Municipal Authority), responsible for inspecting and ensuring that electrical contractor work is complying with all applicable local, State and Federal regulations.

Self-Contained Meter - a meter capable of measuring the entire amperage of the electric service without the use of current and/or voltage transformers.

Policy

1. Homeowners are not authorized to cut and reconnect electric services.
    - Refer to **General Information, Article 114**.
    - If a permit has been issued to a homeowner, an electrician is not allowed to perform any electrical work, including the Cut and Reconnect of the service.
2. If a permit has been issued to an electrician, the State-approved Residential Cut and Reconnect policy must be abided by. All electricians who hold a valid State of Connecticut E-1 or E-9 license are permitted to perform cut and reconnect services as outline within this policy. To maintain this privilege, all requirements of the Residential Cut and Reconnect policy must be strictly adhered to. Violations of the policy will result in termination of these privileges.
3. The electrician must contact the Company and obtain a valid service request number at least 15 days prior to starting work to avoid potential code violations or non-compliance with the Company's requirements.
4. The electrician must obtain a valid service request number, either through the Eversource website (www.eversource.com) or by telephone (1-888-544-4826).
    a. The service request job description must indicate that the work involves a Residential Cut and Reconnect.
    b. The work must be completed within 60 days from the date of the service request.
    c. If an emergency arises outside of the Company's business hours, weekends, or holidays, it is permissible to perform repairs or replacement of the service. However, the electrician must obtain a valid service request number from the Company and a municipal permit within 1 business day (as per State of Connecticut Building Code, Section R105.2.1 - Emergency Repairs).

Section 2 — Residential Cut and Reconnect Policy

5. The electrician shall cut the service entrance cable at the point of attachment (weatherhead) on the line side of the existing service drop connectors, replace or repair the service, and re-connect the service in compliance with the Company's requirements.
    a. This work may be performed by an E-2 Journeyman or Apprentice working under the direct supervision of an E-1 or E-9 licensee.
    b. All applicable rules of the State of Connecticut Department of Consumer Protection - Occupational & Professional Licensing Division apply.
6. If the point of attachment is going to be changed or there are existing clearance conflicts, the electrician must receive the Company's approval prior to starting work.

The service drop shall be relocated by the Company only.

7. The electrician is responsible for obtaining the appropriate permits from the Authority Having Jurisdiction in advance of starting work.
8. The electrician is responsible for taking all necessary steps to ensure the meter(s) are reinstalled into the same service location from which removed. Refer to **Metering** for additional details.
    a. For all multiple meter installations, each house, store, office, apartment, or area serviced must be permanently marked with its unique identification on the inside of each meter position and the outside of the cover of each associated meter socket and load disconnect for which the service is provided (to avoid erroneous customer billing conditions).
    b. Each meter and meter position should be marked with the unique identification for the location serviced prior to the start of any service work to ensure compliance with this requirement.
9. The service must be reconnected utilizing properly sized connectors as listed below.

    Phase/Hot Leg /Conductor:

    - Properly taped Parallel Groove Connector
    - Properly taped Pliers-applied Wedge Connector Neutral Conductor
    - Bare Parallel Groove Connector
    - Bare Pliers-applied Wedge Connector
10. Upon completion of the job, the electrician will be responsible for re-installing the meter into the new meter socket under the following conditions:
    a. The existing meter is appropriate for the new service when:
        - Upgrading from a 60-100A single phase, 3 wire service to a 100-200A single phase, 3-wire service.
        - Replacing 320A meter socket with a 320A meter socket.
    b. The meter has not been damaged either prior to or during the service upgrade.

    Note 1: Installation of a meter does not supersede the inspection requirements by the Authority Having Jurisdiction.

    Note 2: For multiple metering locations, the electrician shall reinstall the meter into the same service location from which it was removed (to avoid erroneous customer billing conditions).

Section 2 — Residential Cut and Reconnect Policy

11. If any conditions as stated in (a) or (b) above prevents the meter from being reinstalled or if a meter is not available to be installed, the electrician shall contact the Electric Service Support Center (1-888-544-4826) within 1 business day to either make appropriate arrangements to install a meter or request permission to install Company approved jumpers and clear meter socket covers. Any type of commercially available jumper and clear meter socket cover designed for such use will be approved.

    The use of non-approved home-made jumpers shall be prohibited.

12. All Company requirements, the National Electrical Code (NEC), State and Municipal building requirements must be met.

13. The electrician is responsible for obtaining approval from the Authority Having Jurisdiction as soon as the work is completed.

14. Unless notified of a building code violation by the Authority Having Jurisdiction, the Company will either reseal or install a new meter.

Non-Compliance and Violations

1. Non-compliance with any of the requirements of the Residential Cut and Reconnect Policy, non-compliance with NEC, OSHA, and State and local building codes will result in the Company sending a written inquiry to the electrician, customer, and the Authority Having Jurisdiction as necessary, to resolve the problem.

2. Repeated non-compliance violations by an electrician will result in notification to the appropriate State and Municipal authorities.

3. The electrician will be notified in writing that a violation letter has been sent and that their privilege to perform work under the Residential Cut and Reconnect Policy may be suspended. In the case where risk of public safety is a factor; the Company will immediately suspend Residential Cut and Reconnect privileges for said electrician.

4. The State of Connecticut Department of Consumer protection - Occupational & Professional Licensing Division will review violations to determine if Connecticut General Statute, Section 20-334 has been violated and will take appropriate action, up to and including penalties as described in the Connecticut General Statute, Section 20-341.

5. The electrician will be billed for all costs that may be incurred by the Company to correct any violation.

Article 300-303 | Section 3 — Types of Electric Service

300. Line Extensions

It is important to consult with the Company in advance for locations that will require a single or three-phase line extension along a town-maintained road, state highway, or into new residential developments, commercial complexes, or industrial parks.

- Under certain circumstances customer charges apply.
- In addition, there are specific policies for line extensions into new residential developments.

301. Primary/High Voltage Service

Requirements for primary/high voltage service are not included in this booklet. Primary metering is normally for services with load characteristics larger than 3000 amps. To provide such service, the Company requires early and detailed consultation.

302. Types of Secondary Service

Refer to **Characteristics of Supply 480 Volts and Below**.

303. Overhead Service from Overhead System

a. The Company service drop will be attached to the structure at the approved location, accessible and at a height to provide adequate clearance. The minimum clearances are:

   - Twelve feet above finished grade, sidewalks, residential driveways, and commercial areas not subject to truck traffic and located more than 25 feet in any direction from a swimming pool, swimming area, or diving platform.
   - Sixteen feet over roads, streets, alleys, parking lots or other areas subject to truck traffic.
   - Refer to **Overhead Service Entrance** and **Overhead Service Drop**.

b. Customer owned service entrance conductors or cable shall be terminated with an approved detachable weather head and be safely accessible from a ladder on the ground. Refer to **Overhead Service Drop**.

c. Location of customer owned weather head shall be positioned to permit the installation of the Company service drop at or below the weather head. A minimum of 20 inches of conductor must extend from the weather head to make a connection to the service drop with a proper drip loop. Refer to **Overhead Service Entrance**.

d. Customer is responsible for providing adequate tree trimming and/or tree removals for the service.

Article 304 | Section 3 — Types of Electric Service

304. Service Lateral from Overhead System or Conduit System

Consult with an Electric Service Designer for a conduit service 200 feet or longer.

Customer is responsible for:

a. Providing a trench with conduit at a depth that provides a cover of 24 inches above the conduit that will run from the Company designated service location at the foundation to the Company's facilities. In some instances, the Company may require the installation of more than one conduit.

b. Ensuring the designated point of attachment for overhead services shall be in direct line of sight to the Company's distribution facilities. The Company shall be consulted for any installations that may not conform to this requirement. Refer to **Article 614**.

c. Ensuring the conduit systems do not enter the building ahead of the first point of disconnect and metering. Refer to **Article 614**.

d. Using conduit that is electrical grade schedule 40 PVC; minimum of 3-inch diameter for single phase service and minimum of 4-inch diameter for three phase service.

e. Providing and installing caution tape in the trench backfill, including conduit encased in concrete. Metallic foil tape is not acceptable. Refer to **Trenching Requirements for Service or Secondary Line**.

f. Coordinating with other utilities, such as telephone, cable, water, and gas.

g. Providing and installing conduit, including an approved slip joint, from the metering equipment to the trench conduit. The line side conduit shall enter the meter cabinet through the bottom left knock-out. The slip joint shall be securely fastened to the building with one clamp. The end of the conduit at our facilities shall be capped and left accessible. Refer to **Conduit Service - Supply End**. Contact the Company for conduit size. For single phase, a minimum of 3-inch diameter is required. For three phase, a minimum of 4-inch diameter is required.

h. At the service end, providing and installing an electrical grade schedule 40 PVC sweep (or steel, if required by the Company) with a 90-degree bend, 24-inch minimum radius from the slip joint to the conduit in the trench.

i. If the designated point on the distribution system is on the opposite side of the road, a conduit road crossing is required. The conduit shall be concrete encased or steel. Such road crossing is at the customer's expense. If allowed by the local municipality, an overhead crossing may be installed at the customer's expense. This includes the pole, the length of customer-dedicated road crossing conductor and any required guying. If a road crossing pole exists or is provided by another utility, a customer's conduit service may be taken from that pole. Contact the Electric Service Designer whenever a road crossing is required.

Article 304 | Section 3 — Types of Electric Service

j. Providing and installing a galvanized steel sweep (or electrical grade schedule 80 PVC if approved by the Company in advance) and conduit with cap at the riser pole if from the Company's overhead system. The sweep shall be a 90-degree bend with a minimum 24-inch radius. Refer to **Conduit Service – Supply End**.

k. Installing a ¼ inch diameter nylon pulling line from the meter socket to the end of the conduit at our facilities (transformer pad, temporary dead-end, handhole or riser pole). Do not enter or open existing electrical structures such as handholes, transformer pads or switch vaults, when installing the pulling line. If access is needed, contact the Electric Service Designer.

l. Providing and installing the ground assembly at the steel sweep at the customer's service entrance. The ground assembly shall consist of a ground clamp suitable for direct burial, Number 6 bare copper wire, a ground rod connector, and a five-eighth inch by eight-foot ground rod. Refer to **Conduit Service – House End**.

m. Taking pictures of trench, metering, and service entrance equipment to confirm correct installation/clearances.

n. Backfilling the trench before the cable install. Exercise care while backfilling to avoid damaging the conduit by not dropping rocks or frozen earth onto it. Suitable backfill shall not contain ash, cinder, shell, frozen material, loose debris, or stones larger than 2 inch maximum dimension.

o. The trench shall be as straight as possible from the point of termination on the building to Company facilities. The total of all bends shall not exceed 225 degrees with no reverse bends.

p. Ensuring that proper clearances for pad-mounted transformers are maintained from travel ways, windows, doors, and any other structures per the following table:

	MINIMUM DISTANCE IN FEET		
ITEM	**IN FRONT**	**TO SIDE OF**	**BELOW**
Door	20	10	-
Air Intake	10	10	25
Window	10	3	5
Fire Escape	20	20	-
Combustible Wall	6	6	-
Noncombustible Wall	5	3	-
Fuel Tanks above & below grade	10	10	-
Natural gas or propane connections	3	3	-
Gasoline dispensing unit	20	20	-

Article 305-308 | Section 3 — Types of Electric Service

305. Installation and maintenance responsibilities for conduit system service laterals

a. Residential Service Entrance. The Company will install conductors in the conduit and terminate in customer owned meter socket and main switch.

b. Commercial / Industrial Services to Service Entrance Capacity of 400 amps or less. The Company will furnish the cable, install the cable in the conduit, and terminate at the customer owned meter socket and main switch, or duct box. The Company will maintain its cable. The Customer will furnish, install, and maintain the conduit and all conductors and disconnecting device (breaker or fuse) beyond the termination point. Refer to **Article 611** for types of metering available.

c. Commercial / Industrial Services to Service Entrance Capacity more than 400 Amps. The Customer will furnish, install, own and maintain all secondary conduit and conductors loosely make up all transformer connections (Company supplied) to the secondary bushings and ensure proper conductor length to avoid tension on the bushings. The Company will make the final connections. Transformer bushings should never be used as a stanchion in the course of pulling conductors.

306. Service Lateral from Underground Manhole System

The Company must be consulted for service lateral from underground manhole system service requests.

a. The service shall include approved Customer provided conduit from the service entrance location to a point on the distribution system designated by the Company. The Customer will install this conduit, including replacement, if necessary, for service upgrades. The service entrance location must be located on the exterior wall of the building.

b. The Company will install conductors into the customer provided conduit. Charges will be in accordance with Company policy. The Company will furnish, install, and own the seal between the customer provided conduit and the Company conductors. The Company will maintain the seal at the Customer's request but will not be responsible for damage due to a leaking seal. The Customer will furnish, install, own, and maintain the seal between its conduit and the wall.

c. If service is fed from a network system, the conduit shall be concrete encased or steel. If service is fed from a non-network system, the conduit shall be concrete encased or steel to the end of the town/state right of way.

307. Temporary Service

Temporary services must be removed within one year. The Company will supply temporary electric service when it can be served from existing lines or facilities.

Customer is responsible for:

- Supplying and maintaining suitable service entrance equipment (weatherproof, if required) in accordance with the International Residential Code. Used material, equipment and devices shall not be reused unless approved by the building official.
- Rendering payment in advance for the cost of connecting and disconnecting the service. This includes the cost of installation and removal of any poles, wires, transformers, meter equipment, or other facilities. These charges are in addition to the regular rate applicable to the use of energy.

Refer to **Temporary Electric Service - Conduit System** and **Temporary Electric Service - Overhead System**.

308. It is the Customer's responsibility to notify the Company when the temporary service is to be discontinued. All electric service equipment will be removed at that time.

Article 400-410 | Section 4 — Characteristics of Supply 480 Volts and Below

400. The Company will supply and meter alternating current with a nominal frequency of 60 hertz (cycles per second).

401. Consult with the Company before purchasing equipment or beginning any electric construction for a new service or an increase in capacity.

402. The Company will designate available nominal voltage and phase characteristics:

NORMAL VOLTAGE	PHASE	WIRES
120/240	1	3
120/208	1	3
208Y/120	3	4
480Y/277	3	4

403. The voltage rating of Customer equipment should be compatible with the normal voltage which the Company will supply.

404. The Company cannot guarantee to maintain the voltage level of these nominal values under all conditions; however, voltage will normally be maintained within reasonable limits and as specified by the regulatory authority.

405. The Company recommends the use of suitable voltage regulating devices where equipment sensitive to voltage is in use. Devices shall be installed after the metering equipment.

406. In general, only single phase service will be supplied to residential loads.

407. Campground and mobile home park services must be 120/240 volts.

408. The maximum single-phase service from an overhead distribution system is 400 amps, including the total rated ampacity for multiple main switches.

Under some circumstances a 400-amp main disconnect is required ahead of multiple sub-main switches when the total rated ampacity exceeds 400 amps (excluding the owner's loop if it is rated at 60 amps). Consult with an Electric Service Designer.

409. A single-phase service exceeding 400 amps to a maximum of 1200 amps must be fed from a pad mounted transformer. Consult with an Electric Service Designer.

410. The maximum three-phase service allowed from an overhead distribution system is 400 amps, including the total rated capacity for multiple main switches. Under some circumstances, a 400-amp main disconnect may be required ahead of multiple sub-main switches whose total rated capacity exceeds 400 amps. Consult with an Electric Service Designer.

Article 411-417 | Section 4 — Characteristics of Supply 480 Volts and Below

411. The largest standard three-phase underground service the Company can provide with one transformer is 3000 amps. Consult with an Electric Service Designer.

412. Three-phase service is normally available for three phase supply loads of 75 kVA or larger only. Consult with an Electric Service Designer.

413. Three-phase supply is not normally available for single family housing. For large residential complexes that may require a three-phase service to the building, individual residential customers will be serviced with single-phase 120/208 volts, 200 amps maximum per position.

414. The Company may refuse to supply electric service to loads with characteristics that may adversely affect the supply to other customers, such as harmonic distortion, voltage fluctuations, noise, or low power factor.

415. The Company no longer offers new 2-phase supply. Customers with existing 2-phase shall consult with the Company before making any changes or additions.

416. The Company no longer offers new three phase, 3 wire, delta supply. Any major upgrade to a Customer's premise or service entrance shall require an upgrade to a three-phase, four-wire system. This includes any upgrade necessary to accommodate a Distributed Energy Resource system.

417. The Company reserves the right to remove any Company owned facilities or services that become inactive.

Article 500-509 | Section 5 — Customer Owned Facilities

Service Equipment

500. Customer owned service equipment must be properly rated for voltage, current, interrupting duty, and ground fault current. Refer to **Metering** for proper service equipment specifications and/or sizing.

501. The Company, upon request, will furnish information necessary to select proper Customer owned service equipment.

502. Higher than usual interrupting duty is required for the main disconnect when supplied from a network system or transformer capacity of 75 KVA or greater. Contact the Company for detailed requirements.

503. Customer owned service equipment shall be installed on the load side of self-contained meters up to 240 volts.

504. Consult with the Company for installations with the main disconnect installed on the line side of the meter (cold sequence):

a. All 480-volt services.

b. Services fed from a Company network (208Y/120V) system. Contact the Company for this type of installation. Refer to **Hot and Cold Meter Sequence – Self Contained** and **Modular Meter Panels for Group Metering**.

c. Single phase overhead residential installations with multiple meter positions exceeding 400 amps. Consult with the Company for this type of installation.

d. All Instrument Transformer rated services.

e. The Company reserves the right to make any service cold sequenced for safety and protection of Company equipment.

505. A Customer provided cable limiter cabinet may be required for a network service. Consult with the Company.

506. There shall be no more than six disconnects per service grouped in any one location. Refer to **Modular Meter Panels for Group Metering**. Utilizing a main disconnect is the preferred installation to allow for additional meters beyond six.

507. All fire pump and alarm circuits shall be metered. If the authority having jurisdiction requires the fire pump or alarm service connections to be ahead of the normal metering, a separate service meter shall be installed at the Customer's expense. Consult with the Company. Refer to **Article 662**.

508. For multiple unit residential buildings, all common facilities (hallway lighting, alarm systems, well pumps, etc.) must be metered separately. This is commonly referred to as an owner's meter.

509. When changes or alteration are made to Customer owned service equipment the service entrance and meter installations must conform to Company requirements and applicable codes.

Article 510-516 | Section 5 — Customer Owned Facilities

Service Entrance Conductors

510. Where a main switch or circuit breaker constitutes the service equipment for a residential single-phase installation, the minimum ampacity of the service entrance conductors shall be at least equal to the rating of the main circuit breaker or the largest main fuse which can be installed in the service equipment.

511. For single-phase installation to an individual customer where more than one switch or circuit breaker is permitted as the service equipment, the ampacity of the service entrance conductors and meter socket-shall be a minimum of 100 amperes.

512. For multiple occupancy buildings where up to six individual switches or circuit breakers function as the disconnecting means, the service entrance conductors must have adequate ampacity for the load.

513. Metered and unmetered conductors shall not occupy the same cable raceway, conduit, handhole, underground box, or encloser.

Pole Mounted Service Equipment and Metering (Special Installation)

514. The Company does not allow pole mounted service equipment and metering.

515. For existing installations, if the Company determines the pole needs to be replaced, the Company will replace the pole. Shifting the existing customer owned service equipment to the new pole is the customer's responsibility and at the customer's expense.

516. Repairs and upgrades to existing customer owned service equipment mounted on a Company pole is not allowed. When repairs or an upgrade to customer equipment is necessary, the Customer shall install and shift the equipment to a pedestal service at the customer's expense.

Article 600-610 | Section 6 — Metering

General

600. The Company may refuse to connect a service or install a meter on any metering installation that does not conform to the requirements in this booklet or is deemed unsafe.

601. Electricity shall not be supplied without being metered or otherwise accounted for as defined by rates. No unmetered conductors shall be installed, pulled, or run through the inside of a building.

602 In the event of Company metering equipment failure, the electrical contractor is responsible for scheduling an outage within a reasonable time frame to allow for repairs.

603. The Company will not supply service to a Customer whose wiring is designed for resale of electricity through submetering except for facilities as approved, in writing, by the Public Utilities Regulatory Authority (PURA).

604. The Customer shall furnish, install, own, and maintain the meter socket and/or instrument transformer (IT) enclosure. Meter sockets must be approved by the Company. Visit www.eversource.com, Builders and Contractors, Connecticut for current metering equipment information.

605. All new, changed, modified, or upgraded service including customer owned metering equipment shall have a municipal inspection before energizing the service.

606. After the Customer meter socket is installed, the Customer shall protect the interior of the socket by installing an approved optically clear cover.

607. The Company shall designate the meter location. This includes new, changed, modified, and upgraded services.

608. The Customer shall maintain a clear and safe workspace directly in front of each meter location. In areas where meter equipment is subject to vehicular traffic, doors, etc., additional protection (such as bollards) is required. Refer to Electric Equipment Ownership and Required Meter Clearances.

- The meter socket must be located at least 3 feet measured horizontally from a gas meter, regulator, propane cylinder, exhaust, or any other fuel storage vessel.
- All single position meter sockets will require 6 inches of clearance around it.

609. The Company shall furnish, own, and maintain the meter, IT, and any wiring between the IT and the meter.

610. Meter(s) shall be installed, removed, and changed only by authorized Company employees and/or in accordance with the Residential Cut and Reconnect Policy.

Article 611-620 | Section 6 — Metering

611. There are two standard metering installations. Self-Contained and Instrument Transformer. The type of meter installation is determined by the voltage, phase, and total name plate rating of the disconnect. Refer to the table below and to the **Construction Requirements** section of this booklet for illustrations.

SUPPLY CHARACTERISTICS			SELF CONTAINED METER 320 AMPS CONTINUOUS OR LESS	INSTRUMENT TRANSFORMER METER
			TOTAL NAME PLATE	TOTAL NAME PLATE
NOMINAL VOLTAGE	PHASE	WIRE	RATING OF SERVICE SIZE	RATING OF SERVICE SIZE
120/240	1	3	100 - 400 AMPS	600 – 1200 AMPS
120/208	1	3	100 - 200 AMPS	Not Applicable
208Y/120	3	4	100 - 400 AMPS	600 – 3000 AMPS
480Y/277	3	4	100 - 400 AMPS	600 – 3000 AMPS
FIRE PUMP	1	3	Must be IT rated service	600 – 1200 AMPS
	3	4		600 – 3000 AMPS

612. Totalized metering is not available.

613. Contact the Company for services over 3000 amps before construction.

614. Meters shall be located outdoors for all services and be accessible at all times.

- For all residential services, the meter location shall be on the front or front side corner of the structure or property. The front is considered to be the side adjacent to the street.
- For any location with a fence that restricts access to metering equipment (including, but not limited to cell towers, government facilities, schools), a designated entry gate is required with an approved Company lock for 24/7 access.

615. Meter sockets and IT equipment shall not be used as a junction box, raceway, or as a grounding point with no taps permitted for any parallel generation or additional services.

616. Customer owned devices shall not be installed between the meter and the meter socket.

617. No Customer owned transformation shall be allowed between the Company's transformer and the first metering point.

618. Customers planning to install generation running in parallel, refer to **Distributed Energy Resources Owned by Customers**. Previously installed service configurations do not set precedent.

619. The Customer shall provide a one-line schematic diagram showing the service entrance, main switch, and proposed meter location when requesting a new, changed, modified, or upgraded service and/or an additional meter.

620. Facilities with multiple meters shall have all meters grouped together within ten feet of one another.

Article 621-634 | Section 6 — Metering

621. A service location that has not had an active meter for six months, will require a municipal inspection and must abide by all requirements of this booklet prior to service reconnection.

622. No Customer owned equipment or conductors other than load side conductors directly serving the Customer's service shall be placed in any Company metering enclosure.

623. Single residential homes shall display the official address on record that was provided by the municipality on the exterior of the building. Lot numbers are unacceptable.

624. In multiple meter installations, each meter mounting device and Customer disconnecting means shall be permanently marked with a weatherproof label on the cover of the associated breaker, inside the associated meter socket, and inside the load center before the meter is installed. The entry door of each unit shall also be marked with the corresponding unique identifier before the meter is installed. It is the Customer's (i.e., property owner/landlord) responsibility to notify the Company of any renumbering changes.

625. Typical meter installations are illustrated in the **Construction Requirements** section of this booklet.

626. Metered and unmetered conductors shall not occupy the same cable, conduit, handhole, underground box, or enclosure.

627. Crossing of metered and unmetered conductors is not permitted.

628. Field modifications of metering equipment or disconnects which impact the UL listing are not permitted unless approved by the manufacturer and recertified by UL.

629. No conductors of any type shall travel on the right-hand side of the meter socket. The lever bypass must be operable at all times without interference.

630. Jumpers or other devices that result in unmetered electric service shall not be used. Refer to the **Residential Cut and Reconnect Policy**.

631. Customer owned pole-mounted meters are a special installation that is permitted only if the Customer furnishes, owns, and maintains the pole. Consult with the Company.

Meter Equipment Mounting and Supports

632. Meter sockets shall be mounted plumb and be securely fastened to a permanent rigid wall protected from any corrosive material, exhaust systems, falling objects, or ice buildup. Appropriate screws of sufficient size shall be used to hold the socket secure. Refer to **Self-Contained Meter Socket Sequence and Mounting Arrangement** for specific requirements.

633. An individual meter or meters mounted adjacent to each other horizontally shall be installed so that the center is approximately 5 feet from the floor to final grade. Refer to **Electric Equipment Ownership and Required Meter Clearances**.

634. Requirements for vertically positioned, multiple meter installations only, refer to **Modular Meter Panels for Group Metering**.

Article 635-642 | Section 6 — Metering

Grounding

635. The grounding electrode conductor shall be at an accessible location in the service equipment and not run through the meter socket nor the IT compartment.

636. The Customer service entrance installation shall have a neutral which is grounded at the first point of disconnect. Meter sockets are not considered a disconnect device.

- Cold sequenced metering
  - The first point of disconnect shall have a location to connect the neutral that is bonded to ground.
  - All subsequent metering equipment shall have an isolated neutral.
  - In instances when a neutral isolation kit is required, the isolation kit shall be from the same meter equipment manufacturer.
- Hot sequenced metering
  - The meter socket enclosure must be bonded to the neutral position.

637. Copper and aluminum shall never be in physical contact with each other. Use special devices designed for this purpose where electrical connection is necessary.

638. The meter socket shall never be used as a grounding point.

Meter Seals

639. All metering equipment and access points to unmetered wiring shall have Company sealing provisions.

640. All disconnecting switches that are utilized for utility metering shall have a locking provision in the off position.

641. Connecting, disconnecting, or tampering with metering equipment is strictly prohibited. When it is necessary to gain access to sealed meter equipment, the Customer shall contact the Company for permission to do so. Upon completion of the work the Customer shall notify the Company to reseal the equipment.

642. Unsafe conditions observed by the Company may result in disconnection of service until made safe.

Article 643-648 | Section 6 — Metering

Self-Contained Single Phase Meter Installations

643. Refer to **Article 611** for services where this type of meter installation is required.

- Customer shall furnish, install, own, and maintain approved, single phase ringless meter sockets, factory installed lever bypass with clamping jaws. The lever bypass shall not be used for load breaking purposes. Visit www.eversource.com, Builders and Contractors, Connecticut for current metering equipment information.
- Company shall furnish, install, own, and maintain the electric meter only.

Sequence of Meter and Service Equipment – Single Phase Installations

644. Single phase service equipment shall be installed on the load side of self-contained meters **Hot and Cold Meter Sequence – Self Contained** except for:

- Services fed from a network system and the disconnect device shall have an AIC (ampere interrupting capacity) rating of 100,000 amps.
- Services fed from a transformer that exceeds the AIC rating of the self-contained single or multi position meter socket. Contact the Company for AIC rating of transformer feeding new or existing services.
- Grouped metering containing greater than 6 metering positions.
- Any service voltage greater than 240 volts must be cold sequenced.

645. For all of the cold sequenced conditions listed above, the main disconnect with overcurrent protection shall be installed on the line side of and adjacent to the meter on the same wall, no greater than 3 feet in distance. The main disconnect shall be service rated for the appropriate AIC and shall include Class R (rejection) type clips installed.

Meter Socket Connections – Single Phase Installations

646. Utility/line conductors are always connected to the top terminals of meter sockets. Customer conductors are always connected to the bottom terminals. Refer to **Single Phase Self-Contained Metering Connections**.

647. Service conductors for all underground fed meter sockets and disconnects shall enter from the bottom left knockout. Refer to **Self-Contained Meter Socket Sequence and Mounting Arrangement**.

Grouped Metering – Single Phase Installations

648. Approved modular metering shall be used for groups of meters such as apartment buildings. Prints of grouped metering arrangements must be submitted to the Company and approved by the Company Meter Department prior to installation. Refer to **Modular Meter Panels for Group Metering**.

Article 649-655 | Section 6 — Metering

Mobile Home - Campground - Marina Metering – Single Phase Installations

649. Mobile home, campground, and marina services shall be 120/240 volts.

650. Mobile home metering facilities shall be provided by the Owner on permanent supports not physically attached to the mobile home. The supports shall be adequate for one or more meter installation and shall be set at a 4-foot minimum depth, galvanized steel set in concrete. Refer to **Permanent Built Meter Pedestal** and **Permanent Manufactured Meter Pedestal**.

651. The Company will not provide individual metered services to locations in campgrounds and marinas used for transient purposes.

Self-Contained Three Phase Meter Installations

652. Refer to **Article 611** for services where this type of meter installation is required.

- Customer shall furnish, install, own, and maintain approved, single phase ringless meter sockets, factory installed lever bypass with clamping jaws. The lever bypass shall not be used for load breaking purposes. Visit www.eversource.com, Builders and Contractors, Connecticut for current metering equipment information.
- Company shall furnish, install, own, and maintain the electric meter only.

Sequence of Meter and Service Equipment – Three Phase Installations

653. Three phase service equipment shall be installed on the load side of self-contained meters **Hot and Cold Meter Sequence – Self Contained** except for:

- Services fed from a network system and the disconnect device shall have an AIC rating of 100,000 amps.
- All switchgear, not fed from a network system, shall have a minimum AIC rating of 65,000 amps.
- All metering equipment and utility operated disconnects that support distributed generation must accommodate the AIC rating for all sources of energy.
- Services fed from a transformer that exceeds the AIC rating of the self-contained single or multi position meter socket. Contact the Company for AIC rating of transformer feeding new or existing services.
- Grouped metering containing greater than 6 metering positions.
- All 480-volt services must be cold sequenced.

654. For all of the cold sequenced conditions listed above, the main disconnect with overcurrent protection shall be installed on the line side of and adjacent to the meter on the same wall, no greater than 3 feet in distance. The main disconnect shall be service rated for the appropriate AIC and shall include Class R (rejection) type clips installed.

655. Utility/line conductors are always connected to the top terminals of meter sockets. Customer conductors are always connected to the bottom terminals. Refer to **Self-Contained Meter Socket Sequence and Mounting Arrangement**.

Article 656-659 | Section 6 — Metering

Instrument Transformer Installations – Current and Voltage

656. Refer to **Article 611** for services where this type of meter installation is required.

- Installations that require IT's (current and voltage) shall be referred to the Company Meter Department for approval before equipment is ordered. Visit www.eversource.com, Builders and Contractors, Connecticut for current metering equipment information.
- Service and metering equipment shall not be energized prior to being fully wired and inspected by the Company's Meter Department and shall be in accordance with arc flash requirements included in this section.

Instrument Transformer Metering Equipment – Enclosure/Conduit/Socket

657. The Customer shall furnish, install, own, and maintain Company approved IT enclosure, for the exclusive use of the Company.

- Unapproved equipment is not permitted.
- Any modification to approved metering equipment shall not be permitted unless explicitly approved by the Company's Meter Department.
- Customer shall procure proper provisions for mounting current and voltage transformers in the same compartment with hinged sealable doors.
- 600 amp – 1800 amp (12 inch) bar type transformers.
- 2000 amp – 3000 amp window type current transformers.
- Horizontal VT mounting provision(s) bolted to the bottom of the instrument transformer cabinet is required for all services greater than 240 volts.
- Customer shall furnish, install, own, and maintain an approved prewired combination meter socket and test switch. Visit www.eversource.com, Builders and Contractors, Connecticut for current metering equipment information.
- Entry through the hub opening at the top of the meter socket is not allowed.
- Refer to **Instrument Transformer Connections** for installation and wiring requirements.

658. All disconnecting switches that are under the control of the Company shall have proper provisions for lock out tag out requirements.

659. In order to provide isolation of the metering equipment, in accordance to arc flash requirements, the Customer shall furnish, install, own, and maintain the following:

- A cold sequenced fused disconnect or breaker installed directly adjacent to the instrument transformer enclosure and within 3 feet.
- A disconnect switch, displaying visible break, mounted within 3 feet, on the load side of the IT enclosure. No electrical connections are allowed between the IT enclosure, and the disconnect switch. Refer to **Main Switch and Instrument Transformer Enclosure** and **Instrument Transformer Installation**.

Article 660-664 | Section 6 — Metering

Meter - Instrument Transformer – Test Switch – Wiring Installation

660. The Company shall:

- Provide the IT(s) with the shorting device in the closed position for the Customer to install.
- Provide the instrument transformer wiring and making terminations to the IT equipment and test switches.
- Provide, install, and maintain the electric meter.
- Maintain the IT(s).

661. The Customer shall:

- Coordinate the pickup/drop off of the IT(s).
- Provide an approved IT enclosure.
- Mount current transformer (CT) and torquing to manufacturer specifications.
- Mount voltage transformers (VT) using appropriate nut and bolt hardware. Self-tapping screws shall not be permitted.
- Ensure line and load conductors are terminated within the IT enclosure.
- The connection of Customer equipment to or before the meter or to the secondary of the IT(s) is prohibited.
- All Customer equipment shall be installed on the load side of the utility CT(s).
- No other connection shall be permitted within the IT, for example, no piercing connectors or power distribution block, no drilling into the bus bar, etc.
- The IT cabinet shall not be used as a raceway or splice box.
- IT(s) are for the use of the Company only. There shall be no Customer owned equipment attached to the IT(s) or test switches.
- Refer to Instrument Transformer Connections for installation and wiring requirements.

Fire Pumps

662. Fire pump services shall be one of the two configurations:

- When the fire pump service is supplied by its own designated utility transformer, this service shall be IT rated and hot sequenced. The CT(s) VT(s) shall be installed in an approved IT enclosure.
    - The fire pump instrument enclosure shall be labeled: DE-ENERGIZE FIRE PUMP SERVICE FROM UTILITY TRANSFORMER.
- No fire pump shall be fed from a self-contained meter.

Arc Flash Equipment Requirements

663. The Company's arc flash requirements are based on National Fire Protection Association for safe work practices (NFPA70E).

664. The Company reserves the right to request and review all arc flash study documents from the Customer.

Article 665-671 | Section 6 — Metering

665. This applies to all service-related work, including and not limited to:

- Meter sets.
- Meter exchanges.
- Inspection.
- Any service troubleshooting and maintenance.
- Voltage monitoring requests.
- Billing complaint investigations.
- Customer requested service disconnects and reconnects.

666. Arc flash requirements apply to all metering equipment and utility operated disconnects, associated with any service configurations fed from a three phase source with the following conditions:

- Instrument transformer rated.
- Fire pump.
- Modular metering includes single phase service fed from a three phase source.
- Class 320-amp meter sockets with bus bar.
- The Company reserves the right to request an arc flash study for any equipment that is not listed above.

667. Il arc flash studies shall be performed and properly maintained by a licensed engineer, provided by the Customer, prior to energizing the service. Contact the Company for AIC rating of transformer feeding new or existing services.

668. Any service modification, including the addition of distributed generation shall require service equipment to follow all arc flash requirements.

669. The service must be disconnected at the transformer, at the Customer's expense, prior to any service work or inspection being performed if the following criteria are not met:

- In the absence of properly certified arc flash study with proper labeling.
- The arc flash rating exceeds 20 cal/cm2.

Arc Flash Labeling Requirements

670. All labeling for arc flash rating must meet NFPA70E requirements including:

- Ampere Interrupting Capacity (AIC) or Ampere Interruption Rating (AIR).
- Nominal system voltage.
- Arc flash boundary.
- Minimum arc rating of clothing (cal/cm2).
- Certification date.

671. If mitigation exists, a separate label containing the same items as referenced in article 869 with the alternative rating, after the mitigation has been applied.

Article 672-674 | Section 6 — Metering

672. The owner of the electrical equipment shall be responsible for retaining the documentation, installation, and maintenance of the marked label.

673. Proper labeling shall be applied to the exterior part of the following equipment:

- Any utility operated disconnect.
- Any additional disconnect devices utilized to isolate any distributed or backup generation.
- IT rated cabinets.
- Meter socket(s).
- Limiter cabinets required for any network services.

674. If the calorie rating exceeds 20 cal/cm2 the following remediation shall be required at the Customer's expense in order to reduce the minimum calorie rating below 20 cal/cm2:

- Remote operation provisions
- Addition of equipment containing maintenance mode settings (MMS)
- De-energization of service during maintenance
- Other remediation options may be required based on the Company safety requirements

Article 700-707 | Section 7 — Utilization Equipment Specifications

General

700. When Customer owned equipment could or actually does interfere with the operation of any components of the Company's electric system or the electric supply to others, the Company reserves the right to refuse service or disconnect service in accordance with the Company's Terms and Conditions for Delivery Service. Such instances include, but are not limited to, harmonic distortion, poor power factor, voltage fluctuations, unacceptable transformers, and capacitor installations. Customers shall consult with the Company in advance of making any commitments for large motors, air conditioning equipment, welders, x-ray machines, electric tank-less water heaters, phase converters, or other equipment which may have a high instantaneous electric demand. The Company will determine the effect such installations may have on the Company's system. Should the Company determine that the installation is likely to cause interference with the electric system or the electric service to others, the Company may refuse to connect service, discontinue service, require the Customer to make modifications to its system, or require the Customer pay the cost of modifications to the Company's system to enable the equipment to be operated. It is the Customer's responsibility to determine and correct the problems such equipment may have on their own system.

Motor/Motor Driven Equipment Including Air Conditioning Equipment

701. The Customer is responsible for contacting the Company before purchasing motors/motor driven equipment to understand the application and the character of service. In general, motors of 3 horsepower or less will be supplied from a single phase service and motors larger than 3 horsepower will be supplied from a three phase service.

702. The electrical limitations of supply circuits may, in some cases, make it necessary to limit the size of the largest motor to be operated on any given part of the Company's system. Written information as to such limitations is available upon inquiry to the Company.

703. In general, single phase 120/240 volt and three phase 120/208 volt equipment with an instantaneous draw of 68 amps or less, and three phase 277/480 volt equipment with an instantaneous draw of 30 amps or less, may be installed without modifications to the equipment or the Company's system. The installation of equipment which has an instantaneous draw which is greater than specified in this paragraph may only be done upon written approval by a Company Representative, typically the Distribution Engineering Supervisor.

704. Upon application to the Company, the Company will determine if the motor is permissible.

705. All motors and motor driven equipment shall be equipped with suitable protective devices. Among such devices to be considered are those to provide protection against single phase operation of poly-phase motors, reversal of rotation in poly-phase motors, overloads, and voltage and frequency variations.

706. The Company will not be responsible for damage caused to Customer owned equipment where such damage is caused by the absence, failure, or misapplication of any Customer owned protective device. The Company will not be held responsible for damage caused by lightning or other acts of nature.

Voltage Sensitive Equipment

707. Customers owning or planning to purchase electronic or other voltage sensitive equipment shall consult the manufacturer of the equipment and install suitable devices to protect against power system transients and/or loss of voltage.

Article 800-811 | Section 8 — Distributed Energy Resources Owned by Customers

General

800. The information included in this section provides guidelines and requirements for Customer owned and/or customer Distributed Energy Resource systems.

801. The installation, connection, and operation of Customer-owned Distributed Energy Resource systems by a Customer receiving service from the Company shall adhere to the Company's Tariffs, Terms and Conditions, and specific program guidelines.

802. The Customer shall contact the Company to obtain information as part of the Customer's planning to make any installation of a Customer owned Distributed Energy Resource system.

803. Customer contact with the Company well in advance of equipment ordering and installation is imperative in order to allow sufficient time for the Company to conduct necessary interconnection studies.

804. An application to the Company is required to initiate the review of any request to interconnect to the Company's grid. Refer to eversource.com, DG, Interconnections & Net Metering, Connecticut.

805. Any Customer construction shall not proceed until all Company approvals are received by the Customer. A service request and consultation with a Company representative may be required.

806. A Company issued permission to operate is required before proceeding with any interconnection to the Company's grid.

807. Any changes to an existing service shall meet the requirements of this booklet.

808. Should a customer owned Distributed Energy Resource system require a planned shutdown, it must be disconnected on the load side of the production meter only. The production meter shall remain energized at all times.

Parallel Generation

809. Proposals to install generation to operate in parallel with the Company distribution system must follow the formal procedure and application process as documented in the Eversource Energy and United Illuminating Company Guidelines for Generator Interconnection – Exhibit B – Generator Interconnection Technical Requirements. Refer to eversource.com, DG, Interconnections & Net Metering, Connecticut.

Non-Parallel Generation (Standby or Emergency)

810. A Closed Transition "make before break" generating facility must be synchronized with the Company's electric power system prior to transfer occurring.

811. When you are considering any on site generating facilities that will operate in parallel (closed transition) with the Company's system the Customer must follow all of the applicable requirements of this booklet and follow the formal procedure and application process as documented in the Eversource Energy and United Illuminating Company Guidelines for Generator Interconnection. Refer to eversource.com, DG, Interconnections & Net Metering, Connecticut, Application to Connect.

Article 812-818 | Section 8 — Distributed Energy Resources Owned by Customers

Distributed Energy Resource Metering and Service Requirements

812. The meter socket or instrument transformer (IT) compartment shall not be used as a raceway or interconnection point for a generator. Auxiliary wires shall not be inside any meter socket or metering IT compartment. Refer to **Article 615**.

813. Any indoor metering shall be relocated outdoors. The revenue and production meters and utility emergency disconnects shall be grouped on the exterior of the building, co-located within 10 feet of the revenue meter. The utility emergency disconnect shall be within 3 feet of the associated production meter. Refer to eversource.com, DG, Interconnections & Net Metering, Connecticut.

814. The requirements for the emergency disconnect is independent of any disconnects associated with cold sequence metering.

815. Customer owned Distributed Energy Resource systems may qualify for a variety of metering configurations as outlined in the programs available. Refer to eversource.com, DG, Interconnections & Net Metering, Connecticut for available program details and requirements.

816. Bi-directional metering (also referred to as netting) is a method of measuring how much energy is consumed and how much is exported to the Company grid. This configuration includes a bi-directional revenue meter and a production meter.

- The production meter measures the total generation from the Customer owned Distributed Energy Resource system. The production meter shall be energized at all times. Over current protection is required between the point of interconnection and the utility side of the production meter.
- The bi-directional revenue meter measures Company electricity consumed by the Customer and any excess electricity generated by the Customer owned Distributed Energy Resource system that is exported to the Company grid. Bi-directional metering interconnections shall always be behind the revenue meter.
- Refer to eversource.com, DG, Interconnections & Net Metering, Connecticut for full program details.

817. Buy-all installations require a new service request for a standalone single metered service for generation only (no customer load). This configuration includes a bi-directional revenue meter only. The revenue meter measures both electricity consumed by the customer and power generated by the Distributed Energy Resource system. Refer to eversource.com, DG, Interconnections & Net Metering, Connecticut for full program details.

818. Refer to eversource.com, DG, Interconnections for meter socket labeling requirements.