Eversource Energy

and

The United Illuminating Company

Exhibit B - Generator Interconnection Technical Requirements

April 8, 2019

Table of Contents

1. SCOPE 3

2. GENERAL CONSIDERATION 3

2.1 General Requirements 3
2.2 Adverse Impact of Generating Facility 3
2.3 Safe Operation and Maintenance 3
2.4 Isolation Devices 3
2.5 Facility Access and Contact Information 4
2.6 Future System Changes and Responsibilities 4

3. GENERAL DESIGN REQUIREMENTS 4

3.1 Interconnection Transformer Winding and Grounding Considerations (Configuration, Ferroresonance, etc.) 4
3.2 Power Quality Requirements 4
3.3 Voltage Regulation 5
3.4 Insulation Coordination 6
3.5 Grounding and Bonding 6
3.6 Arc Flash 6

4. PROTECTION AND CONTROL REQUIREMENTS 7

4.1 Generator Protection Philosophy 7
4.2 General Requirements 7
4.3 Additional Requirements for Inverter-Based Installations 10
4.4 Additional Requirements for Induction Generators 11
4.5 Additional Requirements for Synchronous Generators 11
4.6 Closed Transition Generators 12
4.7 Open Transition Generating Facilities 13
4.8 Special Protection Systems 13
4.9 Protection System Changes 14
4.10 Underfrequency Protection 14

5. INTERCONNECTING GENERATORS WITH NETWORK SYSTEMS 15

5.1 Area Networks 15
5.2 Spot Networks 15

6. METERING, MONITORING AND COMMUNICATION 16

6.1 Communications Channels and SCADA 16
6.2 Metering and Related Equipment in General 16
6.3 CL&P-Specific Requirements for Revenue Metering and Related Equipment 17
6.4 UI-Specific Requirements for Metering and Related Equipment 18

7. TESTING AND MAINTENANCE REQUIREMENTS 19

7.1 Witnessing of Commissioning Test 20
7.2 Periodic Testing 20
7.3 Safe Operations and Maintenance 21

8. STANDARDS AND APPLICABLE GUIDELINES (IEEE, UL, ANSI, ETC.) 21

Appendix A 22
Appendix B 25
Appendix C - Additional Requirements for Inverter-Based Installations 26
C.1. Inverter voltage trip settings 26
C.2. Inverter frequency trip settings 26
C.3. Inverter Voltage Ride-through Capability and Operational Requirements 26
C.4. Inverter frequency ride-thru capability 27
C.5. Grid support utility interactive inverter function status 27

1. Scope

These Generator Interconnection Technical Requirements ("Technical Requirements") apply to the Interconnection of a Generating Facility to the EPS, regardless of federal or state jurisdiction. These Technical Requirements provide requirements relevant to the safety, performance, reliability, operation, design, protection, testing, metering, and maintenance of the Interconnected Generating Facility. Among other things, these Technical Requirements are particularly focused on the safety of the general public and the employees and equipment of the EDC. All capitalized terms shall have the meanings specified in the glossary set forth in Attachment XI to the Guidelines for Generator Interconnection: Fast Track and Study Processes.

2. General Consideration

2.1 General Requirements

2.1.1 Any Generator desiring Interconnection with the EPS or modification of an existing Interconnection must meet the specifications set forth in this section and any other requirements which may be imposed by the EDC, including without limitation:

2.1.1.1 Latest approved version of the IEEE 1547 (Standard for Interconnecting Distributed Resources with Electric Power Systems) and associated 1547 standard and family of guidelines or recommended practices.

2.1.1.2 Latest approved version of UL (Underwriters Laboratories) 1741 (Inverters, Converters, Controllers and Interconnection System Equipment for use with Distributed Energy Resources).

2.1.1.3 Latest approved version of UL 1741 SA (Supplement A)

2.2 Adverse Impact of Generating Facility

Unintentional Islanding by the Generating Facility of all or part of the EPS (meaning a part of the EPS is kept energized by the Generating Facility after the EPS has de-energized the area) is prohibited as it may result in unsafe conditions on the EPS. The Generator shall comply at all times with Section 6 of the Interconnection Agreement.

2.3 Safe Operation and Maintenance

The Generator shall operate and maintain the Generating Facility in accordance with Good Utility Practice and comply with all aspects of the Interconnection Agreement and applicable Guidelines and tariffs, terms and conditions. Moreover, the Generator shall comply, at all times, with all applicable laws, regulations and other legal requirements. In the event that the Generating Facility may pose an unreasonable risk to the EPS, the Interconnection Agreement provides that (a) the EDC may install equipment to monitor the Generating Facility and (b) the EDC may disconnect the Generating Facility as set forth in the Guidelines.

2.4 Isolation Devices

2.4.1 Low Voltage Applications (<= 600 volts):

For voltages equal to or less than 600 volts on the EPS, the Generator shall own, install, operate and maintain an external Isolation Device (or comparable device mutually agreed upon by the parties) for the Generating Facility that can be opened for isolation. The Isolation Device shall be operated by the Generator's personnel and shall be in a location easily accessible by EDC personnel at all times. The Isolation Device shall: (i) be gang operated; (ii) have a visible break when open; (iii) be rated to interrupt the maximum Generator Facility output; and (iv) be capable of being locked open. Although EDC personnel will normally not operate the Isolation Device, the EDC reserves the right to have its personnel open the Isolation Device in an emergency. If an existing Isolation Device at the Generating Facility meets the requirements of this section, then this requirement of an additional Isolation Device may be waived by the EDC.

The Generator shall maintain the Isolation Device in good working condition. The EDC shall not be responsible for any damage to the disconnect switch or the Isolation Device.

2.4.2 High Voltage Applications (> 600 volts):

The EDC shall own, install, operate and maintain the Isolation Device when the Isolation Device is required to be installed at voltages greater than 600 volts on the EPS. The EDC will determine the size, type and rating of such Isolation Device. An existing Isolation Device, if deemed adequate for the application by the EDC, may be sufficient. If a new Isolation Device is required, then the cost of such device, including the installation thereof, will be borne by the Generator.

2.5 Facility Access and Contact Information

2.5.1 Emergency Reporting. In accordance with Section 6.4.1 of the Interconnection Agreement, the EDC and the Generator shall each provide to the other (and shall update as necessary) a telephone number that can be used at all times to allow the other to report an emergency.

2.5.2 Access to EDC Equipment and Facilities. In accordance with Section 6.4.2 of the Interconnection Agreement, the Generator shall allow the EDC access to the EDC's equipment and the EDC's facilities located on the Generating Facility's premises.

2.5.3 Access to Isolation Device. In accordance with Section 6.4.3 of the Interconnection Agreement, the EDC shall have access to the Isolation Device of the Generating Facility at all times.

2.6 Future System Changes and Responsibilities

The EPS is dynamic and must be able to accommodate future load growth and system changes. Therefore, the EDC may, at its discretion and cost, make upgrades to the EPS. Such upgrades may have an impact on existing Generator Facilities and/or Interconnection Facilities. To ensure continued safe operations in compliance with the Interconnection Agreement, the Generator Facilities and/or Interconnection Facilities may need to be upgraded in accordance with the upgraded EPS. The Generator and the EDC will work together and cooperatively to implement the appropriate changes, upgrades, etc. to attain the common goal of continued safe and reliable operation of the interconnection of the Generator to the EPS.

3. General Design Requirements

3.1 Interconnection Transformer Winding and Grounding Considerations (Configuration, Ferroresonance, etc.)

In order to provide maximum operating flexibility for the Generator and to minimize possible adverse effects on the facilities of other EDC customers, the Generator shall provide, at its sole cost and expense, an interconnection transformer between the Generating Facility and the EDC-owned equipment, unless this requirement is waived in writing by the EDC in its sole discretion. The Generator shall propose to the EDC an interconnection transformer and grounding configuration, which shall be subject to the approval of the EDC at its sole discretion. The final winding connection and grounding configuration is subject to the approval of the EDC at its sole discretion.

3.2 Power Quality Requirements

3.2.1 The Generating Facility and its Interconnection system shall not inject DC current greater than 0.5% of the full rated output current at the POI.

3.2.2 The Generating Facility shall not create objectionable flicker to other EDC customers.

3.2.3 Harmonics. When the Generating Facility is serving linear loads, harmonic current injection into the EPS at the PCC shall not exceed the limits listed below under the following test conditions:

- Serving balanced linear loads

- No voltage distortion present

Individual harmonic order h (odd harmonics)	Maximum harmonic current distortion limit as a percent of current (I) *
h < 11	4.0%
11 ≤ h < 17	2.0%
17 ≤ h < 23	1.5%
23 ≤ h < 35	0.6%
35 ≤ h	0.3%
Total demand distortion (TDD)	5.0%

Even harmonics are limited to 25% of the odd harmonic limits set forth above.

* where I = the greater of the Local EPS maximum load current integrated demand (15 or 30 minutes) without the Generating Facility, or the Generating Facility rated current capacity (transformed to the PCC when a transformer exists between the Generating Facility and the PCC).

3.2.4 The Interconnection of the Generating Facility shall not increase the potential for ferroresonance in the EPS.

3.2.5 The Interconnection of the Generator Facility shall not cause temporary undervoltages or overvoltages.

3.2.6 An Induction Generator may be connected and brought up to speed as an induction motor if it can be demonstrated that the initial voltage drop (visible flicker) is acceptable and within limits as defined by IEEE 519. When flicker occurs, outside of the IEEE 519 limits, soft starting will be required, such as speed matching to within 1% of synchronous speed or other techniques.

3.3 Voltage Regulation

The Generating Facility shall not: (i) actively regulate the voltage of the EPS unless specifically agreed by the EDC; (ii) cause the voltage at any point along the EPS to deviate from the levels prescribed by the exemption to the upper voltage variation established by the Public Utilities Regulatory Authority by way of Decision, dated March 6, 2019, in Docket No. 03-01-15RE04 or the voltage limits established in Conn. Agencies Regs. § 16-11-115(a), whichever limits are greater (currently +5/-5% for residential and commercial customers ; or (iii) cause any voltage deviations, which are objectionable to other customers of the EDC.

The EDC may regulate the voltage on the EPS by employing load tap changing transformers or line voltage regulators. These devices are typically designed for one-way (forward) power flow to properly regulate the voltage. Therefore, unless specifically waived in writing by the EDC, the Generating Facility shall be required to limit its output so that reverse power flow cannot occur when the proposed Interconnection would be expected to result in reversed power flow through a load tap changing transformer absent such limitation.

When the proposed Interconnection is expected to result in reverse power flow through line voltage regulators, control modifications necessary to mitigate the effects of the reverse power flow may be made, if practical, at the sole cost and expense of the Generator. Otherwise, the Generating Facility will be required to limit its output so that adverse levels of reverse power flow cannot occur.

3.3.1 VAR (Power Factor)

3.3.1.1 All Generators other than Induction Generators shall be capable of operating within a power factor range of 0.9 leading to 0.9 lagging. Unless specifically determined

through studies performed by the EDC and as may be specified in the Interconnection Agreement, the power factor as measured at the PCC shall be within such range. If the power factor is outside of this range the method and compensation for power factor correction shall be determined by the EDC.

3.3.1.2 The VAR requirements for Induction Generators shall be determined by the EPS. For aggregate generation of up to and including 100 kW, there will be no charge to the Generator. For aggregate generation greater than 100 kW, the EDC shall charge the Generator a one-time "capacitor charge" to cover the cost of supplying the reactive current to the Generating Facility. This "capacitor charge" shall be based on 0.5 kVAR of capacitors per kW of generator nameplate capacity and will be based on the prevailing rate of installed cost per KVAR by utility grade equipment.

3.4 Insulation Coordination

The Generating Facility and all other equipment connected to the EPS (even in closed transition mode) must be able to withstand the normal and abnormal voltages that can be experienced on the EPS (i.e., normal and abnormal voltages shall not cause damage to or reduce the reliability of any connected equipment). The Generator shall be responsible for procuring equipment with a level of insulation *and fault withstands capability* compatible with the grounding method specified below.

BIL (Basic Impulse Insulation Level)

Equipment connected to the EPS must be designed with a certain minimum Basic Impulse Insulation Level (BIL). BIL, in general terms, is a measure of the ability of a piece of equipment to withstand normal and abnormal voltages. Lightning and switching of equipment are two common sources of high abnormal voltage transients. The following table represents minimum BIL levels of equipment connected to the EPS:

Circuit Voltage (kV)	Voltage Class (kV)	Minimum BIL (kV)
2.4	2.5	60
4.16	5.0	60
4.8	5.0	75
8.32	8.7	75
11.45	15.0	95
13.2	15.0	95
13.8	15.0	95
23.0	25.0	125
27.6	35.0	150
34.5	35.0	200

The Generator shall ensure that the BIL of all the installed equipment meets the applicable standards set forth above, as well as applicable UL, ANSI and IEEE standards. Furthermore, such equipment shall be installed in compliance with all applicable local, state and federal codes.

3.5 Grounding and Bonding

The grounding scheme of the Generating Facility Interconnection shall not cause overvoltages that exceed the rating of the EDC's equipment connected to the EPS and shall not disrupt the coordination of the ground fault protection on the EPS.

3.6 Arc Flash

The interconnection of a Generating Facility to the EPC system shall not increase available fault current and associated arc flash energy to a level where EPC workers would have to use the next level of enhanced Personal Protective Equipment (PPE) and/or restrictive work methods above and beyond

what the workers would normally use for work at the same location without the Generating Facility present.

4. Protection and Control Requirements

4.1 Generator Protection Philosophy

One of the core objectives of these Technical Requirements is to protect the public, EDC personnel and the EPS from unsafe or unstable operating conditions. Therefore, much of the focus of these Technical Requirements is on the use of protective functions designed to prevent the Generating Facility from causing a system failure or propagating disturbances onto the EPS during normal operations. Such requirements are designed solely to protect the public (and EDC employees) and the EPS, and are not designed to protect the Generating Facility or the Generator's other facilities and equipment. The Interconnection of the Generating Facility to the EPS will not be allowed to degrade the reliability of the EPS either as a result of its operation or as a result of changes to the EPS to accommodate the Interconnection.

From time to time, protective relays and microprocessors used in protective relays and inverters must be removed from service for maintenance, testing, and revision upgrades. During such times, the Generating Facility shall not operate in parallel with the EPS without adequate protection in service and functioning as approved. Additionally, for firmware upgrades, the EDC may require witness testing by the EDC to determine the success of any such upgrade. The Generating Facility is required to review any such upgrade with the EDC before any such upgrade is attempted.

4.2 General Requirements

4.2.1 Section 2.1 of these Technical Requirements is generally applicable to all of these Technical Requirements, and should be reviewed in concert with Section 4.

4.2.2 The specifications and requirements listed herein are intended solely to mitigate possible adverse impacts caused by the Generating Facility to the EDC's equipment and to the reliability of its EPS as well as to protect the safety of the EDC's personnel, the general public, and other customers of the EDC. They are not intended to address protection of the Generating Facility itself or internal load on the Generating Facility side of the PCC. It is the responsibility of the Generator to comply with the requirements of all appropriate standards, codes, statutes and authorities to protect itself and its loads. The Generator must be aware of the risk of single phasing and of voltage transients (and other normal system disturbances as described herein) that accompany Interconnection with the EPS. In accordance with the Interconnection Agreement, it is the Generator's responsibility to protect the Generating Facility from these risks.

4.2.3 The EDC shall make available to, upon request, system protection information directly related to the Point of Interconnection, which information may be used by the Generator solely to evaluate protection of its Generating Facility during parallel operation and for no other purpose.

4.2.4 The design of the Generating Facility's protection and control scheme shall take into account the EDC's practice of automatically reclosing portion(s) of its EPS without synchronism check after one or more portion(s) of the EPS have been tripped. The de-energized portion of the EPS may be re-energized at any time after de-energization. If the EDC's reclosing practices are found to be incompatible with the Interconnection of the Generating Facility, the EDC may choose to modify the EPS to accommodate that Interconnection, which modification shall be at the Generator's sole cost and expense.

4.2.4.1 Unless otherwise agreed by the EDC, if the Generating Facility has been tripped off-line, then the Generating Facility's control system shall not permit the Generating Facility to be reconnected to the EPS for at least five (5) minutes after normal system conditions are re-established.

4.2.4.2 The Generating Facility shall be designed to accommodate reclosing of the EPS even if no reclosing exists at the time of Interconnection**.** If the Generating Facility's protection cannot be designed to be compatible with the EDC's reclosing practices, other anti-Islanding measures will be required at the Generator's sole cost and expense *(e.g., a dedicated circuit supply or direct transfer trip protective relaying from all EDC sources and isolation points).*

4.2.5 Protective relays required by these Technical Requirements shall either be Utility Grade or certified to UL1741/UL 1741 SA and IEEE C62.41 and IEEE C62.45, as amended from time to time. Equipment tested to UL 1741/UL 1741 SA after the May 7, 2007 date need only prove compliance with UL 1741/1741 SA. The time characteristics of these relays must be reviewed and approved by the EDC prior to purchase by the Generator in order to achieve coordinated timing with the EDC's protective devices.

4.2.6 The Generating Facility shall not operate in parallel with the EPS without properly functioning protective equipment required by these Technical Requirements.

4.2.6.1 Generating Facilities (of less than or equal to 1 MW in size) are not required to provide redundancy in protective functions. However, if such a Generating Facility desires to operate in parallel with the EPS with its required protective equipment out of service, the design of that facility shall include redundant protection functionality installed in parallel to facilitate the removal of that protective relaying from service for any reason.

4.2.6.2 Generating Facilities (above 1MW in size) shall be designed in a manner such that the Generating Facility protection shall provide sufficient redundancy in protective function(s) so that no single protective equipment failure can remove any protective function required by the EDC.

4.2.7 The EDC has adopted UL 1741and UL 1741 SA (including IEEE C62.41) for certifying the electrical protective functionality of independent power systems, including Generating Facilities. UL 1741/1741 SA compliance may be established by UL or other Accredited, Nationally-Recognized Testing Laboratories. The EDC also accepts inverter-based Generating Facilities that are installed in multiple packs and that have been certified to UL 1741/1741 SA in this configuration.

4.2.8 Generating Facilities that are not intended to export power to the EPS, but which are capable of exporting power, must include either (i) a reverse power (32R) or (ii) under-power (32U) relay or (iii) a corresponding function in a multifunction microprocessor. A reverse power element (32R) operates whenever power is exported from a Generating Facility onto the EPS for periods beyond those expected during normal system transient conditions. An under-power element (32U) ensures the Generating Facility is always importing some preset level of power. If the import level drops below the "under-power" threshold, then the element will operate to trip the Generating Facility. The under-power element (32U) must be used in cases where a reliable (32R) (export trip) cannot be guaranteed. (See Appendix A for recommended settings).

It is recognized that for business model reasons, for technical reasons such as limitations in an existing facility, or for process reasons such as the acceleration of the application approval or reduction in studies required, the Generator may choose to operate the facility exclusively in a non-export mode.

4.2.9 The Generator shall submit to the EDC for review and acceptance the settings for all devices with protection functions that could affect the Interconnection. These devices include all relays, adjustable inverters and controllers that provide protective functions used for EDC-required protection. These settings shall be provided to the EDC no later than twenty (20) Business Days prior to the scheduled date for setting those relays/inverters/controllers. The

Generator shall provide both a paper and an electronic copy of the setting file for all settings within any electronic multifunction relay. The Generator must also provide the most recent revisions to the schematics and wiring diagrams listed in Attachment I to the applicable Guidelines ("Interconnection Request"). The Generator shall also submit to the EDC a written description of the operation as programmed for each of the protective relay schemes that could affect the Interconnection. Each such protective relay scheme description shall list all inputs to the protective relay, the function(s) performed on these inputs, and a list of all outputs driven by the relay. The vendor instruction manual will not be acceptable for this purpose.

4.2.10 Over-and under-voltage and over-and under-frequency protective relay functions are required for all Generating Facilities interconnected to the EPS. This requirement also applies to closed transition transfer schemes that result in the Generating Facility operating in parallel to the EPS for 100 milliseconds or longer. Voltage sensing on all three phases shall be used for the required voltage relaying for maximum sensitivity for phase disturbances.

4.2.11 All protection functions required by the EDC for protection of its EPS shall be designed in such a way that a loss of AC power will not compromise that protection. Acceptable methods include but are not limited to: undervoltage trip, DC battery systems, and UPS systems.

4.2.12 An Interconnection interrupting device such as a circuit breaker or contactor shall be installed to isolate the Generating Facility from the EPS. All such Interconnection interrupting devices must be capable of interrupting the maximum available short circuit current and the current produced when the Generating Facility is connected out of phase. For the avoidance of doubt, if the Generating Facility has multiple interrupting devices, this requirement applies to each such device.

4.2.13 An interconnection circuit breaker equipped with all appropriate protective devices defined in this document shall be located at the PCC in addition to any required interrupting device(s) and protection devices required at the generator. However, if a Generator meets certain requirements, the EDC may elect to waive the separate protection devices at the PCC. In order for the EDC to consider waiving the separate protection devices at the PCC all of the following conditions must be met: (unless waived by the EDC).

(a) Total Generation Facility Capacity is less than 1MW.
(b) Generation Facility Capacity is less than 1/3 of its total minimum load.
(c) Generating Facility is designed as a net-import facility at all times (no power exported to EPS).
(d) Generator has interrupting and protection devices meeting all other requirements in this document.

4.2.14 Voltage relays that can be connected directly to the Generating Facility's line voltage without a voltage transformer (VT) are acceptable to the EDC.

4.2.15 Unless otherwise agreed by the EDC in writing, protective relay schemes shall be hardwired to the device they are tripping. Test switches are required in the current, voltage and trip circuits.

4.2.16 Current Transformer (CT) ratios and accuracy classes for CTs as used in the Generating Facility protection shall be consistent with ANSI and IEEE standards.

4.2.17 Voltage Transformers

The Generating Facility shall be equipped with a direct voltage connection or a VT, which shall be connected to the EDC's side of the interrupting device. For three-phase applications, a VT for each phase is required. If the interconnecting voltage transformer is ungrounded at the EDC voltage, this VT shall be a single three-phase device or three single-phase devices

connected from each phase to ground on the EDC's side of the Generating Facility's interconnecting transformer, rated for phase-to phase voltage. The secondary winding shall be connected in open delta, have a loading resistor to prevent ferroresonance, and supply a zero sequence over-voltage relay. On one side of the relay/resistor, the connection shall be grounded.

Relays that (i) are capable of calculating zero-sequence voltages, and (ii) can be directly connected at the utilization voltage, may be utilized in lieu of grounded-wye to open delta VTs.

4.3 Additional Requirements for Inverter-Based Installations

Current inverter systems are capable of performing many of the required protective functions internally, without the need for additional protective equipment. Therefore, additional standards are applicable to inverter-based technologies. Two external standards shall apply to inverter-based Interconnections: (1) IEEE Standard 1547, (Standard for Interconnecting Distributed Resources with Electric Power Systems): and (2) UL Standard 1741 and UL Standard 1741 SA, "Inverters, Converters, Controllers and Interconnection System Equipment for use with Distributed Energy Resources." These standards set forth the nominal voltage and frequency parameters that must be met and the limits allowed for anomalies such as flicker and interference, as well as the time allowed for disconnection when the required parameters are no longer being met or for reconnection following a system failure or automatic disconnection.

The EDC recognizes the concept of "Type Certification" (sometimes called pre-certification) which requires that the inverter-based units undergo standardized testing, usually by an Accredited Nationally Recognized Testing Laboratory (e.g., Underwriter's Laboratory), and that the results of those tests be made publicly available. Type certified units typically must also be "listed" by the laboratory and the equipment labeled as such. Advanced inverters also provide grid support functionality and can assist with resource availability in the event of a bulk power system or other disturbance. As such and unless agreed upon by the EDC, inverters must also be set as per the guidance provided in Appendix C.

4.3.1 The technical requirements for certified inverter based Generating Facilities, 20kW and less, are found in a separate document, the Eversource Energy/UI "Guidelines for the Interconnection of Residential Single Phase Certified Inverter-Based Generating Facilities of 20 kW (ac) or Less."

4.3.2 The requirements of UL 1741/1741 SA may be applied to inverters with photovoltaic and other electric energy sources. An inverter is considered approved if it is certified to the UL 1741/1741 SA testing procedure and it has passed the required tests without failure to comply with IEEE C62.41 and C62.45. Proof of certification under UL1741/1741 SA and compliance with IEEE C62.41, and C62.45 shall be required. As of May 7, 2007, UL 1741 includes the requirements within it of IEEE C62.41, and C62.45. Therefore, equipment tested to UL 1741/1741 SA after that date need only prove compliance with UL 1741/1741 SA.

4.3.3 It is the Generator's responsibility to submit written evidence that the proposed Generating Facility has been UL 1741/1741 SA certified. Generators should contact the Generating Facility's supplier to determine if it has been listed.

4.3.4 Non-certified inverters must have either non-islanding or anti-islanding protection as defined by IEEE 1547 and conform to the maximum harmonic limits prescribed in IEEE 519. Non-certified inverters must be protected by certified or Utility-Grade Relays, using settings approved by the EDC.

4.3.5 Self commutated inverters with external frequency sensing may be used to synchronize the Generating Facility with the EPS. The following requirements apply to such inverters:

4.3.5.1 The Generator shall use one or more synchronizing devices such as motorized breakers, contactor/ breaker combinations, or a fused contactor (if mutually agreeable) to connect the Generating Facility to the EPS. This synchronizing device shall not be the Interconnection interrupting device. This synchronizing device shall be capable of interrupting the current produced when the Generating Facility is connected out of phase with the EPS consistent with IEEE 1547-2003, Section 4.1.8.3.

4.3.5.2 All synchronizing shall be done by the Generator at the Generating Facility. The Generating Facility shall not be used to energize a de-energized EDC circuit.

4.3.5.3 In-line breakers, contactors, or switches without synchronizing devices require electrical or mechanical interlocks to prevent out-of-phase closing with the EPS.

4.3.5.4 All synchronizing schemes used for interconnecting a Generating Facility with the EPS must conform to the synchronizing requirements of the latest version of IEEE 1547. Automatic synchronizing schemes are preferred.

4.4 Additional Requirements for Induction Generators

Unless the EDC shall determine otherwise, there are no additional protection requirements applicable only to Induction Generators.

4.5 Additional Requirements for Synchronous Generators

4.5.1 The following additional relay functions are required for Synchronous Generators. Settings for these relays shall be submitted to the EDC for review. See Appendix 4.2.8A for setting guidance.

4.5.1.1 51V Over-Current (Voltage Control or Restrained). This element provides backup phase over-current protection for system faults under a collapsed voltage condition.

4.5.1.2 59G Over-Voltage (Ground). This element detects ground faults in the event that a ground N over-current source is lost. When studies show it can operate reliably, an alternative to the 59G is a 51N over-current (Ground). This element provides ground over-current protection and operates with an inverse time-current characteristic when its input current exceeds a predetermined value.

4.5.1.3 25 Synchronizing or Synch-Check. This element supervises the operation of the Generator automatic or manual synchronizing system by ensuring proper voltage phase angle matching and, where appropriate, slip frequency between the EPS and the Generating Facility before the breaker is allowed to close.

4.5.2 Any or all of the following additional relay functions may be required by the EDC. Settings for these relays shall be submitted to the EDC for review. See Appendix A for setting guidance.

4.5.2.1 32R Reverse Power. This element is used on systems designed as import only systems to ensure no power is exported onto the EPS.

4.5.2.2 32U Under-Power. This element performs a similar function to the 32R element, except it ensures the Generating Facility is always importing some level of power.

4.5.2.3 46 Negative Sequence Current. This element serves to protect both the EPS and the Generator system from system unbalances including single phasing.

4.5.2.4 51 Phase Over-Current. This element provides over-current protection and operates with an inverse time-current characteristic when its input current exceeds a predetermined value.

4.5.2.5 51N Ground Over-Current. This element provides ground over-current protection and operates with an inverse time-current characteristic when its input current exceeds a predetermined value.

4.5.2.6 67 Directional Phase Over-Current. This element provides directional phase over-current protection and operates with an inverse time-current characteristic when its input current exceeds a predetermined value in a specified direction.

4.5.2.7 67N Directional Ground Over-Current. This element provides directional ground over-current protection and operates with an inverse time-current characteristic when its current exceeds a predetermined value in a specified direction.

4.5.2.8 86 Lockout Relay. This auxiliary relay is electrically tripped by the Generating Facility protection and in turn trips the isolating circuit breaker(s). It can only be reset manually after all protective trips have been cleared.

4.5.3 Synchronizing Devices

4.5.3.1 The Generator shall designate one or more synchronizing device(s) such as motorized breakers, contactor/breaker combinations, or a fused contactor (if mutually agreeable) to be used to connect the Generating Facility to the EPS. This synchronizing device may be a device other than the Interconnection interrupting device. The synchronizing device must be capable of interrupting the current produced when the Generating Facility is connected out of phase with the EPS consistent with IEEE 1547-2003, Section 4.1.8.3 as amended from time to time.

4.5.3.2 All synchronizing will be done by the Generator at the Generating Facility. The Generating Facility shall not be used to energize a de-energized EDC circuit.

4.5.3.3 In-line breakers, contactors, or switches without synchronizing devices require electrical or mechanical interlocks to prevent out-of-phase closing with the EPS.

4.5.3.4 All synchronizing schemes used for interconnecting a Generating Facility with the EPS must conform to the synchronizing requirements within the current version of IEEE 1547. Automatic synchronizing schemes are preferred.

4.5.4 The Generator shall provide relaying functions to clear both phase and ground short circuit faults on the EDC's distribution circuit. The operating characteristics thereof shall be subject to review and approval by the EDC.

4.6 Closed Transition Generators

4.6.1 A closed transition, "make-before-break" Generating Facility must be synchronized with the EPS prior to transfer occurring. The transfer scheme will then parallel the Generating Facility with the EPS for less than 100 milliseconds. During this brief period, the load will be either transferred to the Generating Facility from the EPS or to the EPS from the Generating Facility. The design of the transfer scheme shall prevent the possibility of sustained parallel operation of the Generating Facility with the EPS.

4.6.2 The closed transition scheme and transition equipment used by the Generator must be reviewed and approved by the EDC prior to operation of the Generating Facility. The closed transition scheme must provide voltage, frequency and phase angle matching as appropriate to provide a smooth transition. It must also provide maximum paralleling time protection. This protection is described below in Section 4.6.3.

4.6.3 Protective relays isolating the Generating Facility from faults in the EPS shall not be required if the paralleling operation is automatic and takes place for less than 100 milliseconds. Maximum paralleling time protection must be provided by a separate device from the equipment used for control and paralleling of the generator and operation of the transfer switch. (*See Appendix B for details on the required logic for this protection*.) This

protection shall (i) use a discrete solid state timer (pneumatic timers are unacceptable for this purpose), (ii) be powered by the generator battery and (iii) trip an interrupting device (which may be the generator breaker) that ceases parallel operation of the generator. This requirement shall prevent sustained operation should the control equipment malfunction.

4.6.4 The parallel operation of a closed transition Generating Facility lasting 100 milliseconds or more requires the same protective relay functions as would a Generating Facility operating in sustained parallel operation with the EPS as described in these Technical Requirements.

4.6.5 The Generator, at a minimum, must perform the following functional tests after its transfer equipment has been energized, but before the closed-transition transfer is allowed on the EPS as a normal operation:

4.6.5.1 Voltage, frequency, and phase rotation;

4.6.5.2 Transfer test (maximum paralleling time must be less than 100 milliseconds); and

4.6.5.3 Excessive parallel time test (when the EDC source switch fails to open), the protection must trip an interrupting device (which may be the Generating Facility's breaker) that ceases parallel operation of the generator.

The EDC must be notified ten (10) Business Days in advance of such testing so that it may, at its option, have its personnel observe the testing, and/or inspect the installation.

4.6.6 Before the approval of closed-transition transfer is granted by the EDC, the Generator must provide to the EDC a report attesting to the successful completion of the above testing. Upon receipt by the EDC of the approved test and inspection reports, along with a verification of the local Electrical Inspector's approval, the EDC will issue a written notice of approval of closed-transition transfer to the Generator.

4.7 Open Transition Generating Facilities

Connection of a Generating Facility with open transition transfer does not require an Interconnection Application and is permissible on the condition that such Generating Facility's manual or automatic transfer switch will not allow any parallel operation of the Generating Facility with the EPS. This electrical state (*i.e.*, open transition transfer) is typically referred to as "break-before-make," which means that the Generating Facility's transfer switch must be designed and operated to prevent the EPS-provided power and the Generating Facility-provided power from powering the Generator's facility circuits (*i.e.*, load) at the same time. Consequently, this mode of operation will also prevent the Generating Facility from potentially energizing the EPS.

4.8 Special Protection Systems

4.8.1 The EDC May Require Direct Transfer Trip (DTT) Whenever:

4.8.1.1 The minimum load to generation on a circuit creates the possibility that an unacceptable abnormal operating condition could occur;

4.8.1.2 It is determined that the Generating Facility's protective relaying may not operate during certain conditions or faults; or

4.8.1.3 The installation could increase the length of outages on a distribution circuit or jeopardize the reliability of the circuit.

The Generator shall be responsible for all costs and expenses incurred by the EDC to install a DTT scheme from all EDC sources and isolation points.

4.8.2 Current Supervision of Under Frequency Load Shedding

Studies have revealed that larger generators may have an undesirable impact on the EDC's underfrequency load shedding schemes. If transmission supply is lost to the EDC's distribution substation for a period of time, the generators paralleled to that substation may

cause the underfrequency load shedding scheme to operate as the generators hold up the EPS voltage and the frequency drops. Because operation of the load shedding scheme in this manner results in the tripping of lockout relays that cannot be reset remotely, this mis-operation results in extended outages for some customers after transmission supply is restored. Therefore, generators above 1 MW may be required to pay for the addition of current supervision of the under frequency load shedding protection at the EDC's substation.

4.8.3 High Speed Protection
If the EDC determines that relaying used traditionally on the distribution system cannot operate quickly enough to avoid adverse system impacts, the EDC may require that the Generating Facility use either direct transfer tripping techniques or more sophisticated techniques that rely on protective relay communication to increase operating speed.

4.8.4 Recloser Schemes
Any Generating Facility proposed for Interconnection at a point on the EPS that is supplied by an existing recloser scheme shall require special studies to determine the feasibility of that Interconnection as proposed. The Interconnection of the Generating Facility to the EPS shall not degrade the reliability of the EPS as a result of either its operation or changes to the EPS to accommodate the Interconnection. If the Generating Facility's protection cannot be designed to meet these requirements, other anti-Islanding measures will be required (such as a dedicated circuit supply or DTT protective relaying from all EDC isolation points). Any changes to the EPS's protective schemes or settings, or to the Generating Facility necessary to accommodate the Interconnection shall be at the Generator's sole cost and expense.

4.9 Protection System Changes

4.9.1 The Generator shall provide the EDC with reasonable advance notice of any proposed modifications to the Generating Facility's protective relay system, relay settings, operating procedures or other equipment affecting the Interconnection. The EDC will determine if such proposed modifications require re-acceptance of the Interconnection per the requirements of this Section 4.

4.9.2 The EDC shall provide the Generator with reasonable advance notice of any proposed changes to be made to its protective relay system, relay settings, operating procedures or other equipment that affects the Interconnection.

4.10 Underfrequency Protection

4.10.1 Existing underfrequency load-shedding relay schemes on the EDC's distribution circuits will be reviewed by the EDC to determine whether or not such scheme will operate properly with the Interconnection of the Generating Facility. Any changes required to the load-shedding scheme to provide proper operation will be at the Generator's expense. See Section 4.8.2.

4.10.2 In order to help the system survive extreme capacity deficiencies caused by sudden loss of generating capacity, the Northeast Power Coordinating Council (NPCC) and its member companies have designed and installed an underfrequency load-shedding scheme throughout the Northeast. The purpose of this scheme is to shed load quickly enough to allow the remaining generation to stay on-line and prevent a major system-wide collapse. The over/under frequency settings recommended in IEEE 1547 have as the major goal the prevention of Unintended Islanding. However, the underfrequency settings in IEEE1547 are somewhat faster and conflict with the goals of the underfrequency load shedding scheme described in NPCC A-03. In order to maximize the likelihood of surviving a system wide capacity deficiency, the EDC may require that some larger Generating Facilities incorporate settings that conform to NPCC A-03 rather than IEEE 1547. The requirements are as follows:

4.10.2.1 All Generating Facilities with an aggregate capacity less than or equal to 100kW shall always utilize the faster IEEE-1547 trip settings.

4.10.2.2 Generating Facilities with an aggregate capacity of 100 kW or more, which are in net export mode, shall utilize the settings dictated by NPCC A-03. The underfrequency relay shall trip the point of interconnection circuit breaker.

4.10.2.3 Generating Facilities with an aggregate capacity 100 kW or more, which are in net import mode, shall utilize IEEE-1547 trip settings. The under-frequency relay shall trip the point of interconnection circuit breaker. In some special net import cases, as permitted in section 4.2.13, the EDC may require the slower NPCC A-03 settings to ensure there is no net load increase to the EPS due to an underfrequency trip.

See Appendix A for setting guidance.

5. Interconnecting Generators with Network Systems

Other sections of these Technical Requirements are applicable to Generating Facilities interconnected with radial primary or secondary distribution circuits, the most common distribution configuration. In large cities, however, a number of electric utility companies use low-voltage network systems. These low-voltage networks are of two subtypes: (1) the secondary grid network (also referred to as an area network, grid network, or street network) that serve; numerous sites, usually several city blocks, from a highly interconnected grid at 120/208 V, three-phase; and (2) the Spot Network that serve independent, large buildings usually at 277/480 V, three-phase.

When completed, the IEEE standard development project P1547.6, "Draft Recommended Practice for Interconnecting Distributed Resources with Electric Power Systems Distribution Secondary Networks", will cover both secondary grid networks and Spot Networks.

5.1 Area Networks

A Generating Facility proposed to be interconnected to the load side of an Area Network protector must utilize an inverter-based equipment package and, when aggregated with other inverter-based generation, shall not exceed 50 kW at any location. A location is defined as any manhole or service box. This criteria is designed to ensure that no more than 50 kW of DG is located between the same set (s) of cable limiters. In addition, the aggregate DG interconnected to an area network will be limited to 3% of the maximum network transformer connected kVA with the feeder supplying the largest number of network units out of service, or a maximum of 500 kW, whichever is less.

5.2 Spot Networks

A Generating Facility proposed to be interconnected to the load side of Spot Network protectors must utilize an inverter-based equipment package and, when aggregated with other inverter-based generation, shall not exceed the lesser of five percent (5%) of a Spot Network's maximum load or 50 kW. The inverter must be certified to stop conducting prior to the three (3) cycle response of the network protector relays. In addition, all the following requirements of IEEE 1547 must be met as amended from time to time:

5.2.1 Network protectors shall not be used to separate, switch, serve as breaker failure backup, or in any manner isolate a Generating Facility's network or network primary feeder from the remainder of the EPS, unless such protectors are rated and tested per applicable standards for such an application.

5.2.2 Each Generating Facility connected to a Spot Network shall be coordinated with the EPS such that it will not affect the operation or prevent closing of any network protectors installed on the Spot Network. Such coordination shall be accomplished without any changes to prevailing network protector clearing time practices of the EPS.

5.2.3 Connection of the Generating Facility to the EPS shall be permitted only if the EPS network bus is already energized by more than 50% of the installed network protectors are in operation.

5.2.4 The Generating Facility's output shall not cause any cycling of network protectors. The Interconnection of the Generating Facility shall not cause the network equipment loading and fault interrupting capacity to be exceeded.

5.2.5 Any Generating Facility installation on a Spot Network that utilizes an automatic transfer scheme in which load is transferred between the Generating Facility and the EPS in a momentary "make-before-break" operation shall meet all the requirements of Section 5.2 regardless of the duration of paralleling.

5.2.6 The Generating Facility shall not utilize a stand alone inverter capable of operation independent of the EPS.

6. Metering, Monitoring and Communication

The Generator shall be responsible for costs and expenses incurred by the EDC in connection with the purchase, installation, operation, maintenance, testing, repair or replacement of its metering and SCADA (supervisory control and data acquisition) equipment. Facility metering (and data acquisition, as required) equipment shall conform to EDC rules and applicable operating requirements.

All metering devices shall conform to applicable American National Standard Institute (ANSI) C-12 standards, as amended from time to time. Metering of watt-hour, reactive volt-ampere-hour and the associated demand components should conform to ANSI standard C-12. Instrument transformers should conform to ANSI standard C57.13.

6.1 Communications Channels and SCADA

6.1.1 The EDC may require communications channels between the EDC and the Generating Facility. If so required, the Generator shall be responsible for procuring such communications channels and for providing protection from transients and over-voltages at both ends of such communication channels. The Generator shall be responsible for all costs and expenses incurred in connection with such communication channels.

6.1.2 In order to facilitate safe, efficient and reliable operation of the EPS, any Generating Facility with a size of 1MW or greater shall have telemetry equipment compatible with the EDC's SCADA. The Generator shall be responsible for all costs and expenses incurred in connection with this telemetry equipment. The quantities to be telemetered are: (i) Phase Voltage; (ii) Line Current; (iii) Real Power (kW); (iv) Reactive power (kVAR); (v) and breaker disconnect status (open/closed) both at the generator and at the Point of Interconnection. The EDC may require the Generating Facility to have additional equipment, such as protective devices, supervisory control and alarms, and a dedicated communications channel. The EDC shall advise the applicant of its communications requirements after a preliminary review of the Generator's Interconnection Request.

6.2 Metering and Related Equipment in General

6.2.1 The EDC shall furnish, read and maintain all EDC revenue metering equipment and shall be responsible for metering required for tariff administration. The Generator shall furnish and maintain all meter mounting equipment, including meter sockets, test switches, conduits, and enclosures. Except as provided below, the EDC shall own the EDC revenue meter and the Generator shall pay the applicable EDC tariff(s), as amended from time to time. If the Generating Facility is a Qualifying Facility, the Generator may elect to own the meter, in which case the Generator shall pay to the EDC a monthly charge to cover meter maintenance and incremental reading and billing costs. Metering requirements and associated charges for Qualifying Facilities are set forth in the applicable EDC tariff(s), as amended from time to time.

6.2.2 The Generator shall provide suitable space within the Generating Facility for installation of the metering and communication equipment at no cost to the EDC.

6.2.3 All metering equipment installed within the Generating Facility shall be routinely tested by the EDC, at the Generator's sole cost and expense, in accordance with applicable EDC and/or ISO-NE rules or standards. If any metering equipment is found to be inaccurate by a margin greater than that allowed under applicable criteria, rules and standards, the EDC shall cause such metering equipment to be corrected or replaced. The Generator shall be responsible for the cost to replace or correct the meter, unless the meter is owned by the EDC. Meter readings for the period of inaccuracy shall be adjusted so far as the same can be reasonably ascertained; *provided*, *however*, there shall be no such adjustment prior to the beginning of the month preceding the adjustment except by agreement of the parties. The Generator and the EDC shall each comply with any reasonable request of the other party concerning the sealing of meters, the presence of a representative of the other party when the seals are broken and the tests are conducted, and other matters affecting the accuracy of the measurement of electricity delivered from the Generating Facility. If either the EDC or the Generator has reason to believe that there has been a meter failure or stoppage, it shall immediately notify the other party.

6.2.4 If the Metering Point and the Point of Receipt or Point of Delivery are not at the same location, the metering equipment shall record delivery of electricity in a manner that accounts for losses occurring between the Metering Point and the Point of Receipt or Point of Delivery. Losses between the Metering Point and Point of Receipt will be reflected pursuant to applicable EDC, ISO-NE rules or standards.

6.2.5 The EDC does not allow hot sequence secondary metering where the revenue meter or instrument transformers are on the line side of the customer's main switch. Any new meter installation (or any changes to an existing revenue meter installation) needs to be cold sequenced and on the load side of the main switch, as approved by the Meter Engineering Department, and in accordance with the CL&P / UI Information and Requirements for Electric Supply book.

6.3 CL&P-Specific Requirements for Revenue Metering and Related Equipment

The type of metering equipment to be installed at a Generating Facility is dependent on the size of the Generating Facility and whether and how the Generator plans to export power or net meter. For Generators that will export power or net meter, the available equipment options and associated requirements are:

6.3.1 Net Metering. Net Metering is an option under the terms of CL&P's Rider N Self-Generator Net Energy Billing Services for a facility whose installed generating capacity for fossil-fueled fired co-generator meets the generator capacity requirements defined in Rider N, or, for generation fueled by a renewable resource that meets the generator capacity requirements defined in Rider N. The Generating Facility will be equipped with a minimum of a two-register, electronic, solid state meter that captures the total monthly energy delivered to the Generating Facility and total monthly energy received by the EPS. The netting of the meter readings during the billing process replicates the functionality of previously utilized mechanical meters that physically operated in both forward and reverse directions. All metering equipment included in this type of installation, including self-acquainted meters, instrument transformers and meters shall meet ANSI C12.1 Metering Accuracy Standards and ANSI C57.13 Accuracy Requirements for Instrument Transformers.

6.3.2 Bi-directional, non-interval meter, including a distribution class meter with multiple registers. One set of registers will record energy flows from the EDC to the Generator during periods when the Generator is a net consumer of energy. A second set of registers will record energy flows from the Generator to the EDC during periods when the Generator is a net producer of energy. Each set of registers will record total flows only and will not

record flows during specific intervals. All metering equipment included in this type of installation, including self-contained meters and instrument transformers and meters, shall meet ANSI C12.1 Metering Accuracy Standards and ANSI C57.13 Accuracy Requirements for Instrument Transformers.

6.3.3 The Generator must allow the EDC telephone or Ethernet access to the meter using the Generators' telephone circuit or provide a separate telephone, Ethernet circuit, if needed by EDC to read the meter.

6.3.4 Bi-directional, interval meter with remote access, including a distribution class meter with multiple registers. One set of registers will record energy flows from the EDC to the Generating Facility during periods when the Generating Facility is a net consumer of energy the other set of registers will record no flow during these periods. A second set of registers will record energy flows from the Generating Facility to the EDC during periods when the Generating Facility is a net producer of energy the first set of registers will record no flow during these periods. Each set of registers will record total flows as well as flows during hourly intervals. In addition, the meters will be equipped with remote access capability that may include communication to the extent required by applicable ISO-NE standards. All metering equipment included in this type of installation shall meet the requirements contained in ISO-NE Operating Procedure No. 18, "Metering and Telemetering Criteria" and EDC's "Policy and Practices for Metering and Telemetering Requirements for New or Modified Interconnections". Copies of both publications are available from the EDC upon request. The Generator shall be responsible for providing all necessary leased communication (telephone, Ethernet) lines and any necessary protection for leased lines and shall also be responsible for all communication required by ISO-NE, or by ISO-NE's designated satellite. The Generator shall maintain all communication and transducer equipment at the Generating Facility in accordance with ISO-NE criteria, rules and standards. The EDC will purchase, own and maintain all communication equipment located at the Generators facilities, if the Generator desires, at the Generator's expense. The Generator shall provide, install and own the EDC-approved or EDC-specified test switches in the meter and transducer circuits.

6.3.5 All metering equipment installed pursuant to these Technical Requirements and associated with the Generating Facility shall be routinely tested by the EDC at the Generator's expense, in accordance with applicable EDC and/or ISO-NE criteria, rules and standards.

6.3.6 Fossil-fuel fired co-generator units that meet Rider N capacity requirements and units fueled by a renewable resource that meet Rider N capacity requirements, will be equipped with a bi-directional meter. Such meter will have remote access capability and may be an interval meter.

6.4 UI-Specific Requirements for Metering and Related Equipment

The type of metering equipment to be installed at a Generating Facility is dependent on the size and type of the Generating Facility and how and if the Generator plans to export power or net meter. In general, the metering requirements for customer generation are:

6.4.1 A Qualifying Facility meeting the generator capacity requirements defined in UI's "Rider NE" with installed generating capacity fueled by either a fossil-fueled fired co-generator or a renewable resource shall have its electric service metered for revenue purposes using two watt-hour meters with detents or, if feasible, one watt-hour meter capable of measuring bi-directional power flow. This type of metering is referred to as "Net Energy Metering." UI may choose to meter generator output, customer loads, or other quantities as necessary e.g., to monitor circuit load, load survey or VARS). The Generator may be required to install metering facilities, such as meter sockets, to facilitate this metering. All metering equipment included in this type of installation, including self-contained meters and instrument transformers and meters, shall meet ANSI C12.1 Metering Accuracy Standards and ANSI C57.13 Accuracy Requirements for Instrument Transformers.

6.4.2 Where the cumulative total nameplate of all generation at the Generating Facility exceeds the requirements of UI's "Rider NE" but is equal to or less than 1 MW, the electric service shall be metered for revenue purposes using two watt-hour meters with detents or, if feasible, one watt-hour meter capable of measuring bi-directional power flow. UI may choose to meter generator output, customer loads, or other quantities as necessary (e.g., to monitor circuit load, load survey or VARS). The customer may be required to install metering facilities, such as meter sockets, to facilitate this metering. All metering equipment included in this type of installation, including self-contained meters and instrument transformers and meters, shall meet ANSI C12.1 Metering Accuracy Standards and ANSI C57.13 Accuracy Requirements for Instrument Transformers.

6.4.3 Where the cumulative total nameplate of all generation at the Generating Facility exceeds 1 MW, bi-directional reactive power flow must also be metered in addition to the metering requirements set forth in Section 6.4.2. Furthermore, UI may require other meters to measure gross generation (Watts and VARS), and station service loads. The Generator shall be responsible for the costs and expenses incurred in connection with these meters and their installation, maintenance and operation. In accordance with the needs of ISO New England and ISO-NE Operating Procedures, the metering requirements set forth in Section 6.4.4 regarding telemetry, remote monitoring and additional metering may be imposed by UI on any Generating Facility described in this Section. All metering equipment included in this type of installation, including self-contained meters and instrument transformers and meters, shall meet ANSI C12.1 Metering Accuracy Standards and ANSI C57.13 Accuracy Requirements for Instrument Transformers

6.4.4 Where the cumulative total nameplate of all generation at the Generating Facility exceeds 5 MW, telemetering, remote monitoring and additional metering shall be required in addition to the metering requirements set forth in the previous sections 6.4.2 and 6.4.3. These requirements are defined in ISO-NE Operating Procedure No. 18 "Metering and Telemetering Criteria" and further defined in ISO-NE Operating Procedure No. 14, "Technical Requirements for Generation, Dispatchable and Interruptible Loads." The quantities to be telemetered may include without limitation: (i) gross generation (Watts and VARS); (ii) tie line power flow (Watts and VARS - in and out); (iii) station service; (iv) line amps; (v) bus voltage; (vi) circuit breaker status; and (vii) generator status. The quantities to be telemetered will be determined by UI as part of the preliminary review of an Interconnection Request. The Generator shall be responsible for the cost of required meters, telemetry equipment and communication circuits as well as their installation, maintenance and operation. The Generator shall be responsible for providing all necessary leased communication (telephone, ethernet) lines and any necessary protection for leased lines and shall furthermore be responsible for all communication required by ISO-New England, its designated satellite, or UI. The Generator shall maintain all communication and transducer equipment at the Generation Facility in accordance with ISO-New England criteria, rules and standards. If the Generator so desires, UI will procure, own and maintain all communication equipment located at the Generating Facility at the Generator's sole cost and expense. All metering equipment installed pursuant to these Technical Requirements shall be routinely tested by UI at the Generator's sole cost and expense in accordance with applicable UI and/or ISO-New England criteria, rules and standards. The Generator shall provide, install and own UI-approved or UI-specified test switches in the transducer circuits.

NOTE:

- UI Standard TSM 2.4 provides details for net energy metering.
- UI Standard TSM 2.3 provides metering details for generators connected at a secondary voltage (480 volts or less).
- UI Standard TSM 2.2 covers units connected at primary distribution voltages (2.4, 4.16 or 13.8 kV).
- UI Standard TSM 2.1 provides metering details for generators connected to the transmission system (115 kV).

7. Testing and Maintenance Requirements

All testing must be completed in accordance with the latest approved version(s) of IEEE 1547 section 5.0 and IEEE 1547.1.

7.1 Witnessing of Commissioning Test

The EDC shall have the right to witness the commissioning testing (pre-parallel testing) as defined in the IEEE 1547.1. The Generator shall notify the EDC ten (10) Business Days in advance of the testing so that the EDC may, at its option, have EDC personnel observe the testing, or inspect the installation. Prior to notifying the EDC of the testing, the Generator shall provide a copy of the test procedure, the as-built one-line and three-line metering and relaying diagram(s), and applicable relay control diagrams for EDC approval. An individual qualified and experienced in testing protective equipment must perform commissioning testing in accordance with the manufacturer's recommended test procedure to prove the settings and requirements of these Technical Requirements. At the completion of the test, the Generator shall provide the EDC with a copy of the test report data. All witness testing will be conducted at the expense of the interconnecting generator.

Testing typically includes, but is not limited to:

- CT and CT circuit polarity, ratio, insulation, excitation, continuity and burden tests.
- VT and VT circuit polarity, ratio, insulation and continuity tests.
- Relay pick-up and time delay tests.
- Functional breaker trip tests from protective relays.
- Relay in-service test to check for proper phase rotation and magnitudes of applied currents and voltages.
- Breaker closing interlocks tests.
- Paralleling and disconnection operation.
- Anti-islanding function, if applicable.
- Non-export function, if applicable.
- Synchronizing Controls, if applicable.
- Proof of inability to energize dead lines.

Prior to final approval by the EDC or anytime thereafter, the EDC reserves the right to test the Generator relaying and control equipment related to the protection of the EDC's system.

The EDC reserves the right to install at a mutually agreed upon location, special test equipment as may be required to monitor the operation and control of the Generating Facility or for evaluating the quality of power produced by the Generating Facility.

Each commissioning test shall include both a calibration check and an actual trip of the circuit breaker or contactor from the device being tested. Visually setting a calibration dial, index or tap is not considered an adequate calibration

7.2 Periodic Testing

The Generator is responsible for the periodic maintenance of all relays, interrupting devices, control schemes, and batteries that involve the protection of the EPS. Batteries shall be load tested once every twenty four (24) months, or more frequently based on the manufacturer's recommendations. The test cycle for protective relaying must not be less frequent than once every sixty (60) calendar months or the cycle recommended by the manufacturer, whichever is shorter. The Generator must provide copies of these test records to the EDC. The EDC shall have the right to monitor the periodic maintenance performed.

Each routine check shall include both a calibration check and an actual trip of the circuit breaker or contactor from the device being tested. Visually setting a calibration dial, index or tap is not considered an adequate calibration.

7.3 Safe Operations and Maintenance

The Generator shall operate, maintain, repair, and inspect, and shall be fully responsible for the Generating Facility and any other associated facilities that it now or hereafter may own unless otherwise specified in the Interconnection Agreement. The Generator and the EDC shall each be responsible for the maintenance, repair and condition of its respective lines and appurtenances on its respective side of the Point of Interconnection. The EDC and the Generator shall each provide equipment on its respective side of the Point of Interconnection that adequately protects the EPS, personnel, and other persons from damage and injury.

All maintenance shall be performed as specified in the Interconnection Agreement as executed by the parties.

8. Standards and Applicable Guidelines (IEEE, UL, ANSI, etc.)

a. Precertified Facilities

Generating Facilities using qualified (certified to UL 1741/1741 SA including IEEE C62.41) inverter-based facilities with power ratings of 20 kW or less requesting an Interconnection on radial systems where the aggregate Generating Facility capacity on the circuit is less than 5% of circuit annual peak load, qualify for Interconnection under "Guidelines for the Interconnection of Residential Single Phase Certified Inverter -Based Generating Facilities 20 kW (ac) and Less".

b. Non-Precertified Facilities

If inverter-based Facilities with power ratings of 20 kW or less are not using qualified inverters, the application shall be reviewed following "Guidelines for Generator Interconnection-Fast Track and Study Process".

Certification of Generator Equipment Packages

Some Generator equipment packages have been certified. This facilitates the Interconnection since properly certified equipment need not be reviewed by the EDC in as much detail as non-certified equipment. This results in a faster, less costly review process for the Generator.

For more information on certification of generator equipment packages see Attachment IX - Certification of Small Generator Equipment Packages in the Guidelines for Generator Interconnection Fast Track and Study Processes

Codes and Standards

- All the existing codes and standards (in addition to any successor codes and standards) listed in Attachment X - Codes and Standards section of the Guidelines for Generator Interconnection Fast Track and Study Processes shall be applied as appropriate.

Appendix A

Distributed Generation Paralleling with an Electric Power System Protective Relaying Setting Guidelines[1,2,3,4] Appendix 4.2.8A		
Protective Element	**Typical Settings**	**Comment**
Always Required Protection[5]		
27 Under-voltage	27-1: 0.50puV, trip in 0.16 sec 27-2: 0.88puV trip in 2.00 sec	Primary Function: Anti-Islanding This element operates when its input voltage is less than a predetermined value. Set per IEEE 1547, Dated 2003, IEEE Standard for Interconnecting Distributed Resources with Electric Power Systems, Table 1. **Note:** Voltage sensing on all three phases shall be used for maximum sensitivity for phase disturbances.
59 Over-voltage	59-1: 1.10puV trip in 1.00 sec 59-2: 1.20puV trip in 0.16 sec	Primary Function: Anti-Islanding This element operates when its input voltage exceeds a predetermined value. Set per IEEE 1547, Dated 2003, IEEE Standard for Interconnecting Distributed Resources with Electric Power Systems, Table 1. **Note:** Voltage sensing on all three phases shall be used for maximum sensitivity for phase disturbances.
81o Over-frequency	81O-1: 60.5Hz trip in 0.16sec	Primary Function: Anti-Islanding This element responds to the frequency of the system voltage and operates when the frequency exceeds a predetermined value. Set per IEEE 1547, Dated 2003, IEEE Standard for Interconnecting Distributed Resources with Electric Power Systems, Table 2.
81u Under-frequency	(Per IEEE 1547) 81U-1: 59.8-57.0Hz trip in .16-300sec 81U-2: 57.0Hz trip in 0.16sec	Primary Function: Anti-Islanding This element responds to the frequency of the system voltage and operates when the frequency is less than a predetermined value. Refer to Section 4.10 for guidance on underfrequency tripping. Set per IEEE 1547, Dated 2003, IEEE Standard for Interconnecting Distributed Resources with Electric Power Systems, Table 2.
	(Per NPCC A-03) 81U-1: 58.0Hz trip in 32.0sec 81U-2: 57.5Hz trip in 11.0sec 81U-3: 57.0Hz trip in 0.16sec	Primary Function: Anti-Islanding This element responds to the frequency of the system voltage and operates when the frequency is less than a predetermined value. Refer to Section 4.10 for guidance on underfrequency tripping. Set per NPCC A-03, 8-31-2004, Figure 1.

Additional Protection Requirements[6]		
25 Synch-Check	set per Customer study[7]	Primary Function: Permissive Close This element supervises the operation of the generator automatic or manual synchronizing system by ensuring proper voltage, phase angle matching, and where appropriate, slip frequency between the EPS and Generator before the breaker is allowed to close. It is important that the appropriate Live/Dead, Line and Bus options be selected to permit breaker closing under other conditions. For example, if the generator is OFF-LINE and the customer bus is Dead then the 25 relay should permit a Live EPS to Dead Bus close of the EPS/Generator interconnection breaker to restore power to the load.
32 Directional Power	32R (rev): set to min. possible level (1-10% MAX watts of smallest Genset) (trip in minimum time 5-10 sec MAX)	Primary Function: Export Blocking This element is used on systems designed as import only systems to ensure no power is exported onto the EPS. When the system is designed to not export power the DG controls are usually set to a "minimum import level" (say 100kW). The difference between this minimum import level and the reverse power setting is the margin before a trip will occur. This relay is set relatively slow to allow the generator import/export controls to respond to sudden load changes which may momentarily cause an export condition. A properly functioning import/export control system will rapidly reduce the generator output back to the target "minimum import level".
	32U (under): set to target import level (trip in minimum time 5-10 sec MAX)	Primary Function: Anti-Islanding This element performs a similar function to the 32R element except it ensures the generating facility is always importing some preset level of power. If the import level drops below the "underpower" threshold then the element will operate to trip. This element should be used in cases where a reliable 32R (export trip) cannot be guaranteed. For example, if an upstream EPS recloser opens and the Generating Facility backfeeds or islands a small pocket of distribution load there may be insufficient reverse power to ensure a reliable 32R trip. On the other hand if the 32U element is applied to this same case, the Generating Facility would trip after the EPS source is lost since the import power will drop to a zero or negative value which is below the 32U trip threshold. Note: These Import Only systems typically have less complex interconnections since they have limited adverse effects on EPS system voltages and are less likely to have the ability to sustain an EPS island.
46 Negative Sequence Current	set per Customer study[7]	Primary Function: Unbalance Detection This element serves to protect both the EPS and generator system from system unbalances including single phasing. Generators may become damaged quickly from high negative sequence currents. This setting is typically based on generator capabilities and may be reviewed by the EDC.
51 Over-current (Phase)	set per Customer study[7]	Primary Function: Fault Detection This element provides phase overcurrent protection and operates with an inverse time-current characteristic when its input current exceeds a predetermined value.
51N Over-current (Ground)	set per Customer study[7]	Primary Function: Fault Detection This element provides ground overcurrent protection and operates with an inverse time-current characteristic when its input current exceeds a predetermined value.

51V Over-current (Voltage Control or Restrained)	set per Customer study[7]	Primary Function: Fault Detection This element provides backup phase overcurrent protection for system faults under collapsed voltage condition. Many DG units cannot sustain fault current especially above 300% FLA. This element would allow setting the pickup below load current when voltage is depressed. Typically the pickup level is set to 50% of load current when the voltage is reduced below 80% of nominal.
59G Over-voltage (Ground)	set per Customer study[7]	Primary Function: Anti-Islanding This element is intended to detect ground faults in the event that a ground source is lost such as the case of a DG with a Delta winding on the EPS side. This type of transformer connection can result in the classic 173% overvoltage on the unfaulted phases after the EDC station breaker is open. Even if this relay is set very fast there is still a risk of distribution system equipment damage (Reference ITIC Curve in IEEE 1547.2/DRAFT 7, Figure D.5).
67 Directional - Phase	set per Customer study[7]	Primary Function: Fault Detection May be required depending on feeder configuration. This element provides *directional phase overcurrent protection* and operates with an inverse time-current characteristic when its input current exceeds a predetermined value in a specified direction.
67N Directional - Phase	set per Customer study[7]	Primary Function: Fault Detection May be required depending on feeder configuration. This element provides *directional ground overcurrent protection* and operates with an inverse time-current characteristic when its input current exceeds a predetermined value in a specified direction.
86	None	Primary Function: Manual Reset Lockout Relay All relay trip elements must operate a *manual reset lockout relay* which in turn trips isolating circuit breakers preventing reclosing by any means. In some cases utility approval may be obtained to allow certain relay elements to directly trip a breaker, bypassing the lockout relay for special automatic schemes.

NOTES:

1) General: This reference is considered a "guide". Engineering judgement must be applied when evaluating each application.

2) Intent: These are considered necessary requirements to protect the EPS from the Generating Facility. The Generator is responsible for considering additional protection for its internal system.

3) Parallel Operation: These guidelines apply to Generating Facilities operating in parallel with the EPS 100msec or more. The requirements are reduced for applications where paralleling times are less than 100msec.

4) Equipment Requirements: Relays shall meet all applicable requirements of Section 4.

5) Always Required Protection: All generators must provide these protective relay elements.

6) Additional Protection Requirements: Certain Generating Facilities may be required to provide these additional requirements as will be determined by the utility interconnection study or as described in Section 4.

7) Set per Customer Study: The settings for these elements shall be submitted by the Generator to the EDC for review. At the Generator's request the EDC will provide system protection information directly related to the Point of Interconnection.

Appendix B

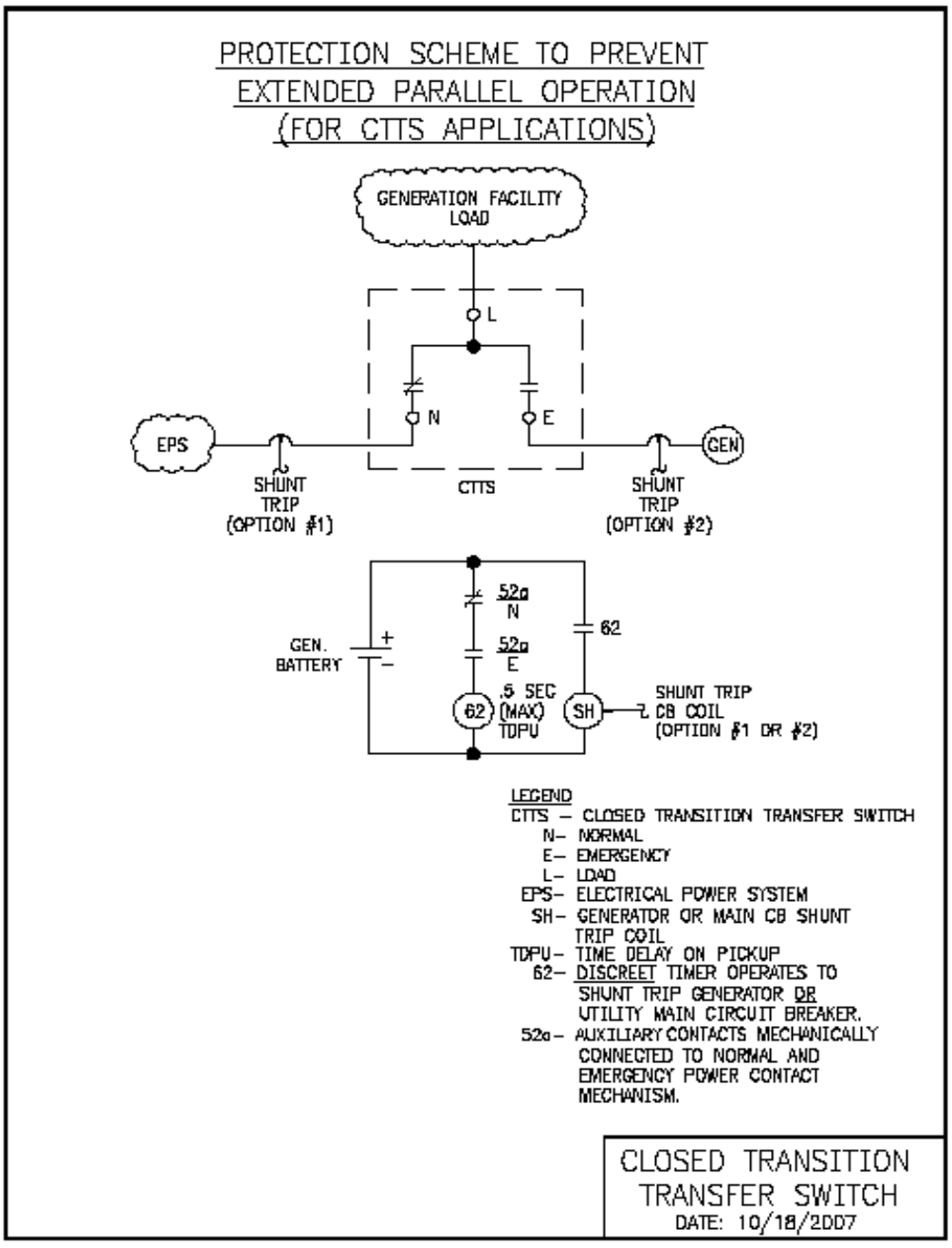
PROTECTION SCHEME TO PREVENT
EXTENDED PARALLEL OPERATION
(FOR CTTS APPLICATIONS)
GENERATION FACILITY
LOAD
L
N
E
EPS
GEN
SHUNT
TRIP
(OPTION #1)
CTTS
SHUNT
TRIP
(OPTION #2)
52a
N
52a
E
62
GEN.
BATTERY
+
-
.5 SEC
(MAX)
TDPU
62
SH
SHUNT TRIP
CB COIL
(OPTION #1 OR #2)
LEGEND
CTTS – CLOSED TRANSITION TRANSFER SWITCH
N– NORMAL
E– EMERGENCY
L– LOAD
EPS– ELECTRICAL POWER SYSTEM
SH– GENERATOR OR MAIN CB SHUNT TRIP COIL
TDPU– TIME DELAY ON PICKUP
62– DISCREET TIMER OPERATES TO SHUNT TRIP GENERATOR OR UTILITY MAIN CIRCUIT BREAKER.
52a– AUXILIARY CONTACTS MECHANICALLY CONNECTED TO NORMAL AND EMERGENCY POWER CONTACT MECHANISM.
CLOSED TRANSITION
TRANSFER SWITCH
DATE: 10/18/2007

Appendix C -Additional Requirements for Inverter-Based Installations

C.1. Inverter voltage trip settings

Shall Trip Function	Required Settings	
	Voltage (p.u. of nominal voltage)	Clearing Time(s)
OV2	1.20	0.16
OV1	1.10	2.0
UV1	0.88	2.0
UV2	0.50	1.1

C.2. Inverter frequency trip settings

Shall Trip Function	Required Settings	
	Frequency (Hz)	Clearing Time(s)
OF2	62.0	0.16
OF1	61.2	300.0
UF1	58.5	300.0
UF2	56.5	0.16

C.3. Inverter Voltage Ride-through Capability and Operational Requirements

Voltage Range (p.u.)	Operating Mode/ Response	Minimum Ride-through Time(s) (design criteria)	Maximum Response Time(s) (design criteria)
V > 1.20	Cease to Energize	N/A	0.16
1.175<V≤1.20	Permissive Operation	0.2	N/A
1.15<V≤1.175	Permissive Operation	0.5	N/A
1.10<V≤1.15	Permissive Operation	1	N/A
0.88≤V≤1.10	Continuous Operation	infinite	N/A
0.65≤V<0.88	Mandatory Operation	Linear slope of 8.7 s/1 p.u. voltage starting at 3 s @ 0.65 p.u.: $T_{VRT} = 3\ s + \frac{8.7}{1\ p.u.}\ (V - 0.65\ p.u.)$	N/A

0.45≤V<0.65	Permissive Operation[12]	0.32	N/A
0.30≤V<0.45	Permissive Operation	0.16	N/A
V<0.30	Cease to Energize	N/A	0.16

C.4. Inverter frequency ride-thru capability

Frequency Range (Hz)	Operating Mode	Minimum Time(s) (Design Criteria)
f > 62.0	No ride-through requirements apply to this range	
61.2<f≤61.8	Mandatory Operation	299
58.8≤f≤61.2	Continuous Operation	Infinite
57.0≤f≤58.8	Mandatory Operation	299
f<57.0	No ride-through requirements apply to this range	

C.5. Grid support utility interactive inverter function status

Function	Default Activation State
SPF, Specified Power Factor	Off
Q(V), Volt-Var Function with Watt or Var Priority	Off Default value: 2% of maximum current output per second
SS, Soft-Start Ramp Rate	On
FW, Freq-Watt Function OFF	Off

[1] In the Permissive Operation region above 0.5 p.u., inverters shall ride-through in Mandatory Operation mode, and
[2] In the Permissive Operation region below 0.5 p.u., inverters shall ride-through in Mandatory Cessation mode with a maximum response time of 0.083 seconds.