APPROXIMATE COORDINATES: LAT: 41.389956° N LONG: −73.462279° W

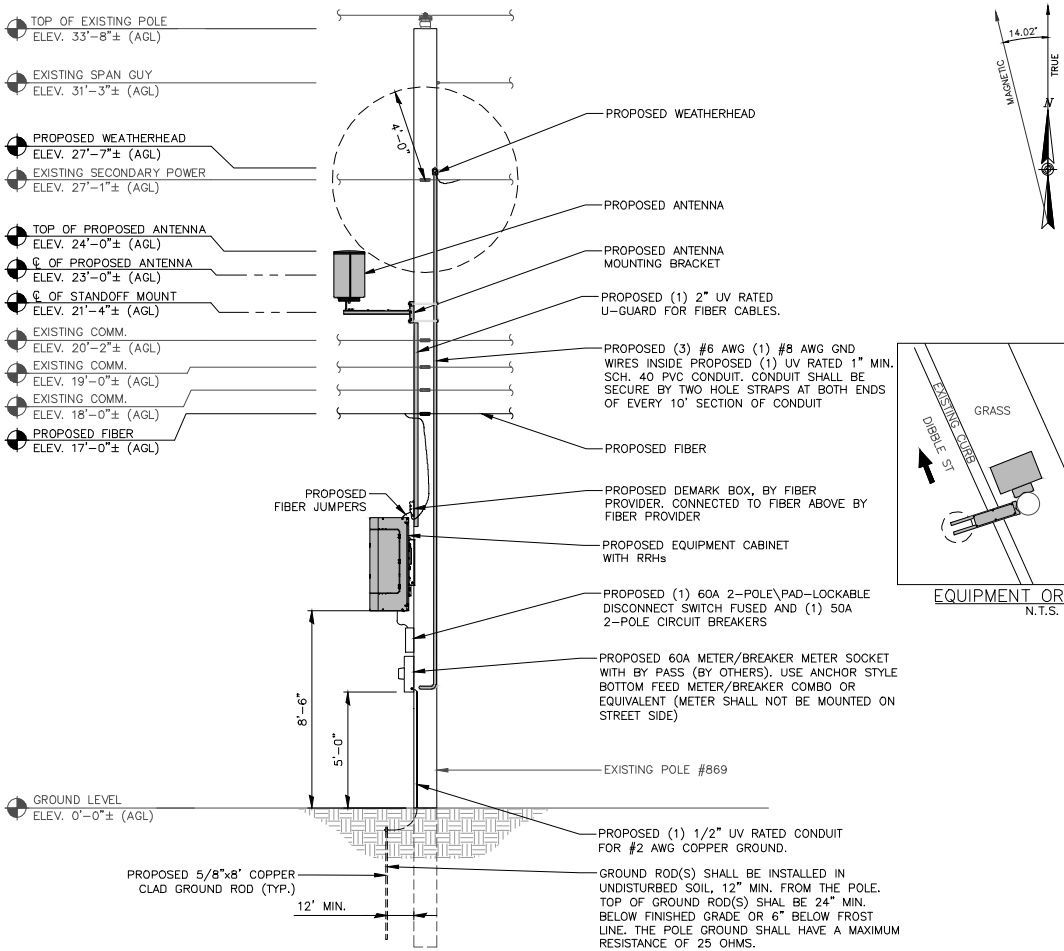

NORTHEAST ELEVATION
SCALE: 3/8" = 1'−0" (22"X34")
3/16" = 1'−0" (11"X17")

GRAPHIC SCALE
2'−8" 0 1'−4" 2'−8" 5'−4" 10'−8"
(IN FEET)

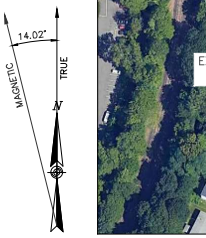

KEY PLAN
N.T.S.

EQUIPMENT ORIENTATION
N.T.S.

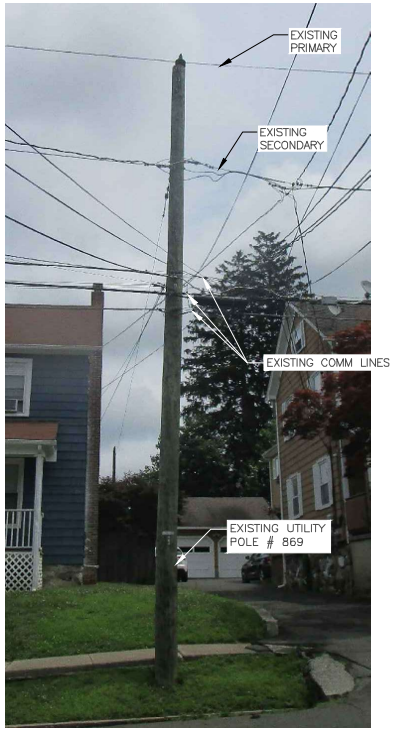

EXISTING PHOTO
N.T.S.

AT&T
AT&T MOBILITY CORP.
492 OLD CONNECTICUT PATH
SUITE #210
FRAMINGHAM, MA 01701

CENTERLINE
ENGINEERING SERVICES, PA
750 W CENTER ST, SUITE 301
WEST BRIDGEWATER, MA 02379
PHONE: 781.713.4725

REVISIONS		
0	07/29/25	ISSUED FOR REVIEW
NO.	DATE	DESCRIPTION

DESIGNED BY:	APPROVED BY:
TG	DC

IT IS A VIOLATION OF LAW FOR ANY PERSON UNLESS THEY ARE ACTING UNDER THE DIRECTION OF A LICENSED PROFESSIONAL ENGINEER TO ALTER THIS DOCUMENT, UNLESS SUCH ENTITY HAS OBTAINED THE PRIOR WRITTEN PERMISSION AND AGREEMENT TO INDEMNIFY AND HOLD HARMLESS THE LICENSED PROFESSIONAL ENGINEER FOR ANY LIABILITY RESULTING FROM SUCH ALTERATION.

CBYD.COM 811 Call Before You Dig, Inc.

CLUSTER & NODE #:	TBD
AT&T SITE ID:	CRAN_RCTB_DNBRY_37
SITE ADDRESS:	13 DIBBLE STREET DANBURY, CT 06810 FAIRFIELD COUNTY
PROJECT TYPE:	UTILITY POLE
SHEET TITLE:	ELEVATION & KEY PLAN
DRAWING #: A−1	REVISION: 0

ANTENNA CHART					
MFG	MODEL	H	D	WEIGHT	VOLUME
GALTRONICS	GQ2418-B6941 (OR EQUAL)	24.0"	16.0"	25.6 LBS.	2.34CU. FT.

NOTE:
MOUNT PER MANUFACTURER'S SPECIFICATIONS.

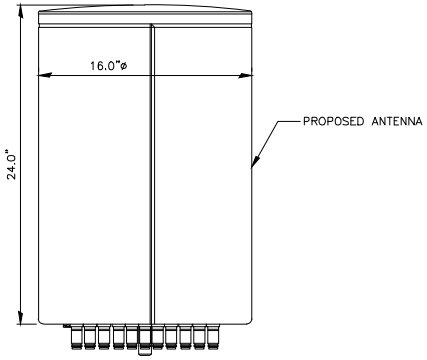

ANTENNA DETAIL
N.T.S.

NOTE:
MOUNT PER MANUFACTURER'S SPECIFICATIONS.

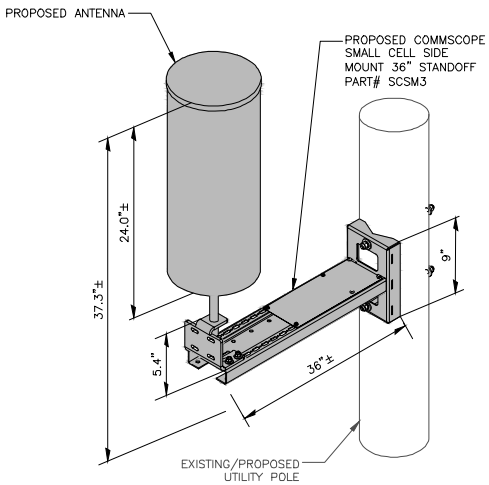

ANTENNA MOUNT DETAIL
N.T.S.

RRU CHART					
QUANTITY	MODEL	L	W	D	WEIGHT
1(P)	4890	17.5"	15.2"	6.9"	68 LBS.
1(P)	4490	17.5"	15.1"	6.8"	68 LBS.

NOTE:
MOUNT PER MANUFACTURER'S SPECIFICATIONS.



RRH DETAIL
N.T.S.

EQUIPMENT CABINET						
MFG	MODEL	H	W	D	WEIGHT	VOLUME
ERICCSSON	BFL901770	48.0"	24.0"	20.0"	75.0 LBS.	13.33 CU. FT.

NOTE:
MOUNT PER MANUFACTURER'S SPECIFICATIONS.

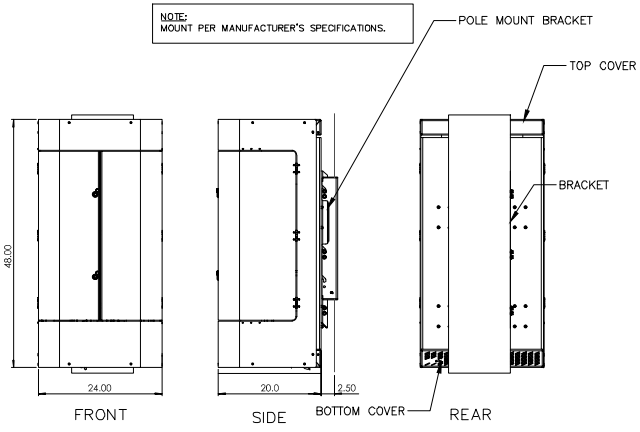

EQUIPMENT CABINET DETAIL
N.T.S.

AC DISTRIBUTION PANEL					
MFG	MODEL	H	W	D	WEIGHT
PTS	PTS90121	10.2"	6.1"	5.3"	7 LBS.



DISTRIBUTION PANEL DETAIL
N.T.S.

POWER SUPPLY UNIT							
QUANTITY	MFG	MODEL	H	W	D	WEIGHT	VOLUME
1 (P)	ERICSSON	6308	15.2"	13.5"	4.3"	33 LBS.	.69 CU. FT.

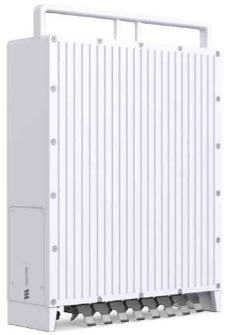

POWER SUPPLY UNIT DETAIL
N.T.S.

METER SOCKET					
MFG	MODEL	H	W	D	WEIGHT
MILBANK	U2272-RL-5T9-BL	18.5"	10.0"	4.8"	16.25 LBS.



METER SOCKET DETAIL
N.T.S.

AT&T
AT&T MOBILITY CORP.
492 OLD CONNECTICUT PATH
SUITE #210
FRAMINGHAM, MA 01701

CENTERLINE
ENGINEERING SERVICES, PA
750 W CENTER ST, SUITE 301
WEST BRIDGEWATER, MA 02379
PHONE: 781.713.4725

REVISIONS		
0	07/29/25	ISSUED FOR REVIEW
NO.	DATE	DESCRIPTION

DESIGNED BY:	APPROVED BY:
TG	DC

IT IS A VIOLATION OF LAW FOR ANY PERSON UNLESS THEY ARE ACTING UNDER THE DIRECTION OF A LICENSED PROFESSIONAL ENGINEER TO ALTER THIS DOCUMENT, UNLESS SUCH ENTITY HAS CONSENTED IN WRITING. THE ENGINEER DISCLAIMS LIABILITY ASSIGNABLE WITH THE REUSE, ALTERATION OR MODIFICATION OF THE CONTENTS HEREIN.

CBYD.COM 811
Call Before You Dig, Inc.

CLUSTER & NODE #:	TBD
AT&T SITE ID:	CRAN_RCTB_DNBRY_37
SITE ADDRESS:	13 DIBBLE STREET DANBURY, CT 06810 FAIRFIELD COUNTY
PROJECT TYPE:	UTILITY POLE
SHEET TITLE:	EQUIPMENT DETAILS
DRAWING #: A-2	REVISION: 0