STEP VOLTAGE REGULATORS – The voltage regulator used on the distribution system is an oil filled autotransformer with a motor–operated mechanical tap changer. Regulators used on the system are single phase devices suitable for pole or platform mounting. The tap changer has 32 available steps, 16 to raise voltage, and 16 to lower voltage. Each step provides for a $^{5}/_{8}$ percent voltage variation. Consequently, the regulator can raise or lower the voltage by approximately 10 percent.

LOCATION – The regulator shall be installed at a location determined from voltage study calculations or actual measurements of circuit voltage characteristics. Circuit voltage limit constraints will normally result in situations where the maximum increase or decrease in voltage will not be greater than 4 percent. Circuit loading should be studied to assure that the selected regulator has a rating that is large enough for a minimum of six years operation before a changeout would be required.

1. **Single–Phase Circuits**: Connect regulators line–to–neutral on multigrounded circuits or line–to–line on delta (ungrounded) or unigrounded wye circuits.
2. **Three–Phase Multigrounded Circuits**: Install one regulator per phase on three consecutive poles or install all three units on a platform. Connect all regulators line to neutral.
3. **Three–Phase Delta (Ungrounded) or Unigrounded Wye Circuits** Install two regulators on consecutive poles or on a platform connected in an open delta configuration. This provides a maximum voltage regulation of ±10 percent. The addition of a third regulator increases the maximum voltage regulation to ±15 percent but does not increase the regulated load capability. For circuits with cogeneration, consult Distribution System Engineering to determine if a third regulator is necessary for proper operation and coordination of the cogenerator's relay protection system.
   Regulators may be installed in the main line of recloser automatic loop schemes, if the regulators are equipped with the reverse power flow option. See the Recloser Guide in **DSEM Section 10** for further information.

RATING – Regulators are rated by both load amperes and kVA. Some regulators are specified with taps, which allow them to be operated at different application voltages, i.e. 7,620 or 4,800 volts. Changing tap positions of the regulator's internal potential transformer provides proper voltage to the regulator control circuit relative to the primary system voltage.

The load ampere rating is always constant regardless of the application voltage at which the regulator operates. However, currents higher than rated currents are permitted if the regulator tap range settings are limited to less than the full regulation range. A regulator is more kVA limited than current limited, so with less of a voltage range, more current can be allowed since regulator kVA = current x voltage change. Nevertheless, be aware that in some cases, the regulator contacts may impose an absolute current limitation.

The kVA rating of a single phase voltage regulator is the product of the rated load current in amperes and the rated range of regulation (in line–to–neutral kilovolts for MGY circuits or line–to–line kilovolts for delta and unigrounded circuits). This range is usually 10 percent. For regulators with taps for different application voltages, the kVA rating changes depending on the application voltage setting of the regulator.

Both the load current and the desired range of regulation are considerations in the choice of a regulator for a particular application. The best way to select a regulator is to determine the **current** at the regulation point and the **range** of regulation needed. Then, from the regulators available for the voltage that will be applied, select the regulator meeting the required current and range requirements. A higher regulator current or greater voltage range than needed is permissible to meet either minimum requirement.

Ampere Loading Increase for Limited Range Operation

Table 1 below lists regulators by voltage, kVA and current capability.

Table 1 – Regulator Current Ratings

Voltage (Volts)	KVA at 10% Voltage Regulation & Rated Current (kVA)	Rated Load Current at 10% (Full Range) Voltage Regulation (Amps)	Rated Load Current at 7.5% Voltage Regulation (Amps)	Rated Load Current at 5% Voltage Regulation (Amps)
7,620*	76.2	100	120	160
7,620*	114.3	150	180	240
7,620*	167	219	263	350
7,620*	250	328	394	525
7,620*	333	438	526	668#
7,620*	416	548	658	668#
14,400	144	100	120	160
14,400	288	200	240	320
14,400	432	300	360	480
14,400	576	400	480	640
19,920	100	50	60	80
19,920	200	100	120	160
19,920	400	200	240	320
27,600	400	145	174	232
* These regulators have taps that permit use with different primary voltages. The kVA ratings in this table are for operation at 7,620 volts. See Table 2 on the following page for other voltages.				
# Contact limitation				

Multi–Voltage Regulators (2,500 – 7,970 volts)

The following table considers one regulator **Item #527265** which has several taps, allowing its connection in circuits with regulator voltages ranging from 2,500 volts through 7,970 volts. The table illustrates that the kVA rating changes with the application voltage, but the current rating remains constant. This particular 100 amp regulator is rated at 76.2 kVA, but only when used at 7,620 volts.

Table 2 – Regulator SC 527265 7,620 V, 95 kV BIL

Application Voltage (Volts)	KVA at 10% Voltage Regulation and Rated Current (kVA)	Rated Load Current at 10% (Full Range) Voltage Regulation (Amps*)	Rated Load Current at 5% Voltage Regulation (Amps*)
2,500	25.0	100	160
5,000	50.0	100	160
7,200	72.0	100	160
7,620	76.2	100	160
7,970	79.7	100	160
* For the 150 amp regulator, multiply kVA and current values by 1.5. For the 219 amp regulator, multiply the kVA and current values by 2.19.			

This table demonstrates the importance of sizing regulators based on current capability and range.

MISCELLANEOUS POINTS OF INTEREST

1. Although a circuit may be considered unigrounded, regulators at its source may be connected line to ground since the neutral is available at the source. It is only on the circuit where the neutral conductor has not been extended that regulators must be connected line–to–line.
2. One can take advantage of the increase ampere rating of a regulator if its range in limited to less than + / – 10 percent in combination with the 15 percent range offered by using three line–to–line regulators. The 1.5 multiplier (see **DSEM Page 13.156**) applies to all ranges, so if a regulator is limited to + / – 7.5 percent, but is part of a bank of three regulators, each connected line–to–line, the overall regulation is 1.5 x 7.5 percent = 11.25 percent, and the current rating is 120 percent of the regulator nameplate.
3. Recognize that regulation with two line–to–line connected regulators will result in a neutral shift. This can cause problems with zero–sequence voltage schemes (such as 59N schemes) connected downstream of the regulator. The neutral sensed by line–to–ground connected potential transformers for a 59N scheme is the earth which represents the neutral at the circuit source, not the output of the regulator, but the phases are the output of the regulator. This can lead to a false sensing of a neutral shift and mis–operation of the 59N scheme.

The following are two examples of sizing regulators for particular applications:

1. What size regulators are needed for a three phase four–wire MGY circuit, using three single phase regulators? Assume the circuit voltage is 13800 GrdY / 7970 volts, with a connected load of 3,000 kVA, and 10 percent voltage regulation is needed.

   LOAD AMPERES = $\frac{\text{LOAD PER PHASE}}{\text{L– N VOLTAGE}} = \frac{\text{3000 kVA /3}}{\text{7.96 kV}} = \frac{\text{3000 kVA}}{\text{7.96 kV (3)}} = 125.6\text{A}$

   VOLTAGE RANGE = 7.96 kV x (0.10) = 0.796 kV

   REGULATOR kVA = 125.6 A x (0.796 kV) = 100 kVA

   Each regulator should be 100 kVA or more and rated more than 100 amps with a voltage regulation range of 10 percent.

   Since the current exceeds the 100 amp rating of the 76.2 kVA regulator, use the 219 amp, 167 kVA regulator.

2. What size regulators are needed for a three phase, three–wire delta circuit, using two single phase regulators? Assume the voltage is 4,800V, the connected load is 789 kVA, and 10 percent voltage regulation is needed.

   LOAD AMPERES = $\frac{\text{LOAD PER PHASE}}{\text{L– N VOLTAGE*}} = \frac{\text{789 kVA /3}}{\text{4.8 kV}/\sqrt{3}} = \frac{\text{789 kVA}}{\text{4.8 kV }\sqrt{3}} = 95\text{A}$

   *Although the electrical neutral is not physically available, an electrical neutral exists and can be used for mathematical calculations of balanced three–phase circuits.

   VOLTAGE RANGE = 4.8 kV x (0.10) = 0.48 kV (Remember: the regulator is connected line–to–line on a delta circuit.)

   REGULATOR kVA = 95A x (0.48 kV) = 45.6 kVA

   Each regulator should be 45.6 kVA. Since the current is below the 100–amp rating of the 76.2 kVA regulator, it can be used.

SELECTION OF RANGE – Circuit design constraints will usually limit the voltage regulation to 4 percent. Therefore, regulators on general purpose feeders can normally be locked off at ±5 percent and a current rating of 160 percent of nameplate can be assumed. A wider range might be applicable for regulators located at the end of a long segment of an express line having no tapped loads, such as a right–of–way segment. With no tapped load on the right–of–way, voltage levels along it may fall below normal limits. The regulator can establish proper voltage at the end of the right–of–way or at tap points.

EMERGENCY LOADING – The overload capability of a regulator is determined by its previous loading, the range of regulation that is allowed, thermal properties of its insulation and the rating of its tap changer. Tables 3 and 4 on the following pages are based on the thermal properties. The upper limit is due to the limitation of the tap changer. The table is conservative. More detailed information on particular regulators is available from Distribution Material & Construction Standards.

Table 3 – Emergency Loading – Maximum Amps Based on 90 Percent Previous Load

Voltage Rating	Nameplate Amps	Hours	± 10% Regulation				± 5% Regulation	
			0 °C	32 °F	30 °C	86 °F	0 °C – 30 °C	32 °F – 86 °F
7,620 V	100	1	200		200		200	
		2	200		172			
		4	186		151			
		8	166		134			
		24	148		118			
7,620 V (Note 4)	150	1	240		240		240	
		2	240		240			
		4	240		227			
		8	240		201			
		24	222		177			
7,620 V	219	1	350		350		350	
		2	350		350			
		4	350		331			
		8	350		293			
		24	324		258			
7,620 V	328	1	535		535		535	
		2	535		535			
		4	535		495			
		8	535		440			
		24	485		387			
7,620 V	438	1	668		668		668	
		2	668		668			
		4	668		661			
		8	668		587			
		24	648		517			
7,620 V	548	1	668		668		668	
		2	668		668			
		4	668		668			
		8	668		668			
		24	668		647			
14,400 V (Note 4)	50	1	100		100		100	
		2	100		86			
		4	93		76			
		8	83		67			
		24	74		59			
14,400 V	100	1	200		200		200	
		2	200		172			
		4	186		151			
		8	166		134			
		24	148		118			

Notes

1. Temperatures refer to the 24–hour average ambient.
2. These ratings are based on ANSI C57.95–1984 and are calculated for normal loss of life.
3. For McGraw–Edison regulators manufactured prior to June 1982, **do not** load the units above the nameplate current rating.
4. No longer standard but may be found in service.

Table 4 – Emergency Loading – Maximum Amps Based on 90 Percent Previous Load

Voltage Rating	Nameplate Amps	Hours	± 10% Regulation				± 5% Regulation	
			0 °C	32 °F	30 °C	86 °F	0 °C – 30 °C	32 °F – 86 °F
14400V	200	1	350		350		350	
		2	350		344			
		4	350		302			
		8	332		268			
		24	296		236			
14400V	300	1	535		535		535	
		2	535		516			
		4	535		453			
		8	498		402			
		24	444		354			
14400V	400	1	668		668		668	
		2	668		668			
		4	668		604			
		8	664		536			
		24	592		472			
19920V (Note 4)	50	1	100		100		100	
		2	100		86			
		4	93		76			
		8	83		67			
		24	74		59			
19920V	100	1	200		200		200	
		2	200		172			
		4	186		151			
		8	166		134			
		24	148		118			
19920V	200	1	350		350		350	
		2	350		344			
		4	350		302			
		8	320		268			
		24	296		236			
19920V	335	1	668		668		668	
		2	668		576		668	
		4	623		506		668	
		8	556		449		668	
		24	496		395		632	
27600V	145	1	290		290		464	
		2	290		249		399	
		4	270		219		350	
		8	241		194		311	
		24	215		171		274	

Notes

1. Temperatures refer to the 24–hour average ambient.
2. These ratings are based on ANSI C57.95–1984 and are calculated for normal loss of life.
3. For McGraw–Edison regulators manufactured prior to June 1982, **do not** load the units above the nameplate current rating.
4. No longer standard but may be found in service.

ARRESTERS – Regulators come equipped with a surge arrester between the source and load bushings. The arrester can be either connected externally or internally under oil, depending on the design of the manufacturer. This arrester is connected across one of the regulator windings and is designed to protect against surges but does not provide complete lightning protection. This is because it is connected across the winding and not from the winding to ground.

Consequently lightning arresters **must** be installed from both the source bushing to ground and from the load bushing to ground. Regulators are purchased with these arresters installed.

TAKING REGULATORS OFF LINE – REGULATORS MUST ALWAYS HAVE THEIR TAP CHANGERS IN THE NEUTRAL POSITION BEFORE THEY ARE TAKEN OFF AN ENERGIZED LINE, otherwise a violent regulator failure could occur. The worst possible situation is removing a regulator with the tap changer one position removed from neutral. This will cause high circulating currents to flow which are in the range of hundreds of times normal. IF THE TAP CHANGER CANNOT BE PLACED IN THE NEUTRAL POSITION, THE CIRCUIT MUST BE DE–ENERGIZED PRIOR TO TAKING THE REGULATOR OFF THE LINE.

All Regulators have a mechanical position indicator with the neutral position clearly marked. Newer controls have a small light which illuminates when the regulator is in the neutral position.

BYASS SWITCH – Regulator installations shall include a special bypass switch to avoid customer interruptions when the regulator is taken off line. This switch passes through two positions with one manual movement of the operator. The first position connects the source and load ends of the circuit. The second disconnects the regulator from the line.

REGULATOR CONTROLS – Regulator controls have the following features. Consult Protection & Controls Engineering or the Zone Manager for the settings to be used.

1. **Base Voltage And Bandwidth** – These two control settings define the normal output range of the regulator. The bandwidth setting gives the voltage range beyond which the regulator will operate to raise or lower the voltage. The base voltage setting determines the midpoint of the range.

   Example: To maintain an average of 120 volts with a maximum high voltage of 120.75 volts and a minimum of 119.25 volts.

   Bandwidth = 120.75 – 119.25 = 1.5 volts

   $$\text{Average Voltage} = \text{Base Voltage} = \text{Max Voltage} - \frac{\text{Bandwidth}}{2}$$

   $$\text{Average Voltage} = 120.75 - \frac{1.5}{2} = 120 \text{ volts}$$

2. **Line Drop Compensation** – In order that voltage regulators can automatically maintain a predetermined voltage at some point **remote** from the regulator location, line drop compensators are required in the regulator control circuit. The voltage at this remote point, commonly referred to as the regulation point or load center, is to be kept constant regardless of the magnitude, or power factor, of the load. This is accomplished by the dial settings of the adjustable resistance and reactance elements located on the control panel of the regulator. The adjustable resistance and reactance elements considered as a unit is called the line drop compensator. On the Company system, line drop compensation is not used except for specially engineered applications such as long express circuits with their load at the far end. For general purpose feeders with distributed load, line drop compensation will not be calculated or maintained.

3. **Voltage Limit Control** – The maximum and minimum voltage levels allowed at the regulator terminals can be set with this control. When line drop compensation is used, the regulator tries to maintain the desired voltage at some point remote from the regulator. Consequently the voltage **at the regulator** could rise above acceptable levels if incorrect line–drop–compensation settings are applied, or if load levels are much larger than anticipated. The voltage limit control overrides the line drop compensator and will not allow the voltage to rise above or fall below the selected voltage limits.

4. **Reverse–Power Flow** – Distribution regulators are normally installed on radial circuits with one source of power, thus power flows through the regulator in only one direction, from a source to the load. There are situations, however, where power can flow through the regulator in the reverse direction. This generally occurs when the source circuit is changed such as by tying two circuits together during switching or by operation of an auto–loop scheme.
   Where the reverse power flow option will be used, ensure that enough current will flow to operate the regulator regardless of the direction of feed. This may require the placement of the regulator away from the tie point to ensure that it will be sufficiently loaded for power flow in either direction.
   Unless a source side potential transformer is added to the regulator, and a modification made to the control, a reverse power flow condition will cause the regulator to malfunction, since a regulator control monitors the load side voltage. This modification is a standard option on regulators ordered for CT & WMA beginning in 1993 and can be added to most older regulators. The option is referred to as the reverse–power flow option.
   Note – The reverse power flow option is designed to work when the regulator is connected to a single source whether it be on the normal source side or the normal load side. It may not work properly when sources are connected to both the source and load side at the same time, such as when a generator source is connected to the load side while the circuit remains connected to the substation on the source side. In general, the source with the lower impedance *at the regulator location* will dominate voltage control regardless of the direction of power flow. Therefore, for a case with a weak generator on one side of the regulator and a strong system source on the other, the reverse–power flow option is better not used, and voltage sensing should always be done on the side of the regulator farther from the strong system source. Distribution Engineering should be consulted when regulators are installed on circuits which have generation connected downstream of the regulator.

5. **Meter Package** – Regulator controls have a meter package which will give the following information:

   a. Present voltage, current and power factor (whether leading or lagging)

   b. Line drop compensation calculated voltage. This is the voltage which is calculated from the settings put into the line drop compensator and if the settings were put in correctly this voltage should be seen at the remote point considered to be the “load center.”

   c. Minimum and maximum voltages at the regulator terminals.

   d. Maximum current and power factor.

REGULATORS AND RECLOSER LOOP SCHEMES – There are limitations on the use of regulators in recloser loop schemes. See the Recloser Guide in **DSEM Section 10**.

SQUIRREL GUARDS – Squirrel guards are shipped with new units. Draw guards from stock for all units without guards.

This Document Supersedes DTR 20.374

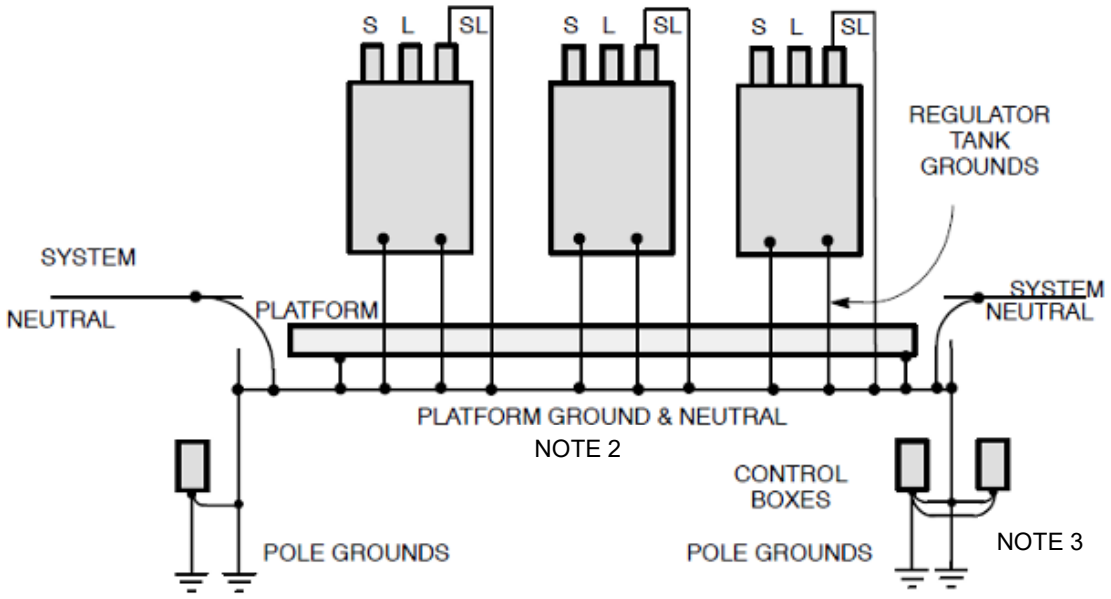

Figure 1 – MGY Grounding Diagram

Notes
1. For secondary and neutral attachment point refer to **DTR 04.047**.
2. Platform ground and neutral conductor shall be the same size as or larger than the system neutral.
3. See **DTR 16.201** for overhead grounding and bonding guide. For control grounding and material, see **DTR 16.311**.

This Document Supersedes DTR 20.374

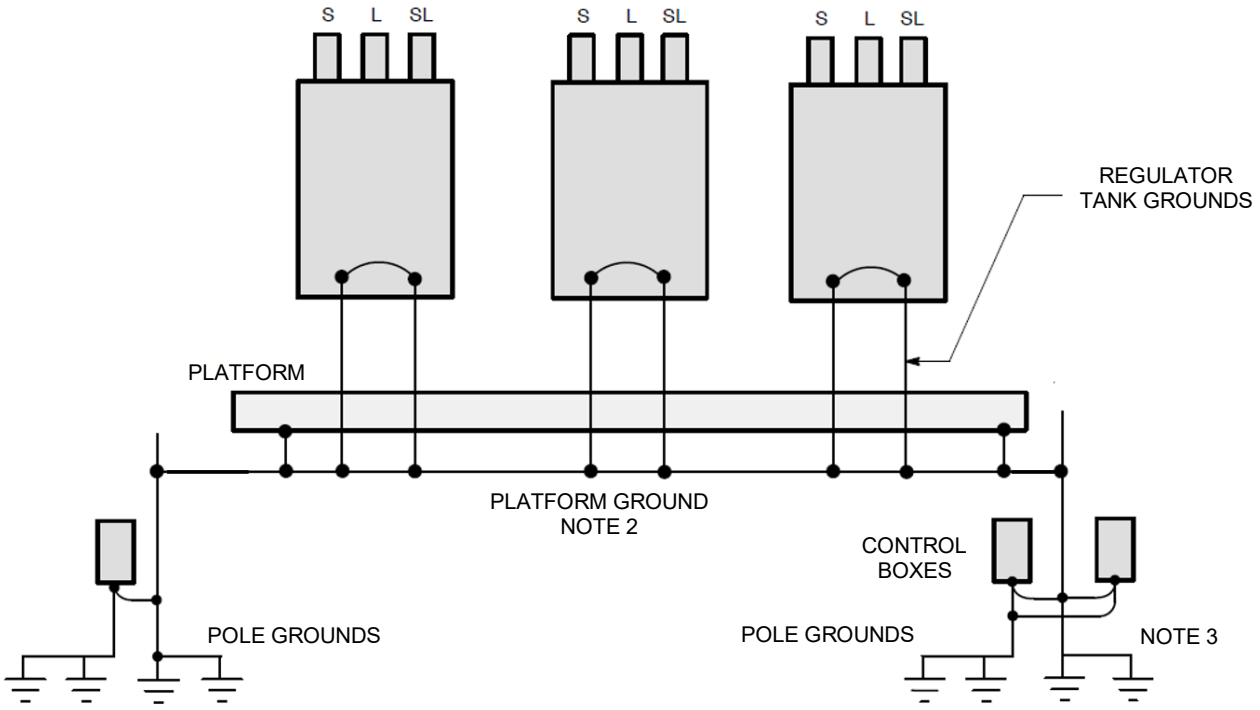

Figure 2 – DELTA/UGY Grounding Diagram

Notes
1. If there is a secondary neutral on this pole, it shall not be bonded to the equipment/control grounds.
2. Platform grounds shall be #2 copper.
3. See **DTR 16.201** for overhead grounding and bonding guide. For grounding details and materials see **DTR 16.413**.

STRUCTURE LIMIT C1 – See **DTR 07.011**

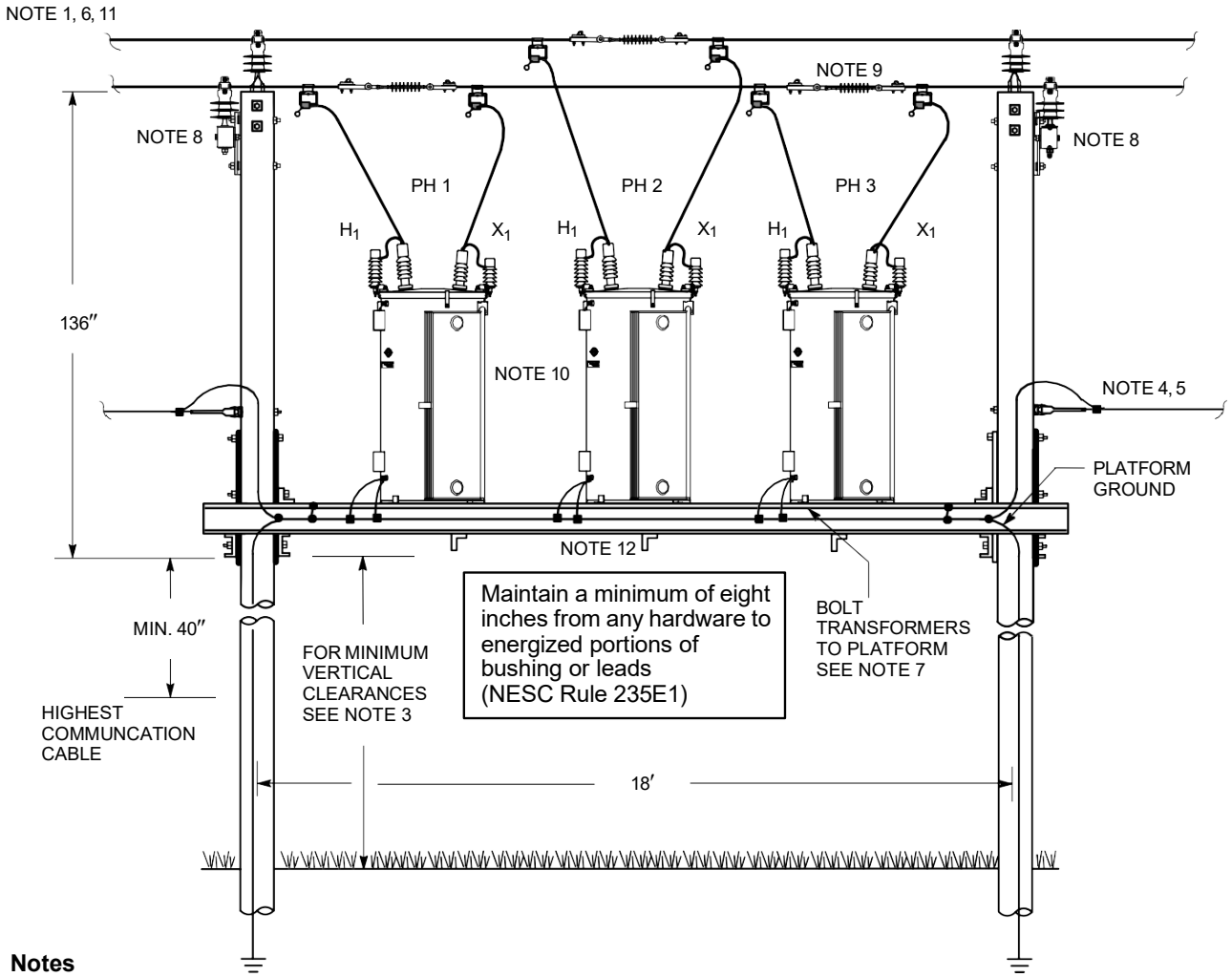

Notes

1. Poles shall be minimum Class 1. Refer to **DTR 20.360** which provides guidance on methods of setting poles associated with platform installations. Refer to **DTR 05.303** which provides guidance on methods of steel casing foundation for distribution poles.
2. For anchors, guys, and pole class refer to **Section 06**. For overhead pole top construction and tap clearances, refer to **Section 10**. Select primary and secondary tap wire from **DTR 32.200**. See **DSEM 08.151** for more tap wire information. Select all overhead distribution line connectors adhering to **Section 33**. Ground and select arrestors according to **Section 16**. Engineering to select cutouts and fusing schedule adhering to **Section 18 – Cutouts & Fusing**. For transformer connection diagrams, refer to **Section 17**.
3. For minimum vertical clearances refer to **DTR 04.115**. Consider the platform as a Category 1 conductor.
4. For secondary and neutral attachment point refer to **DTR 04.047**.
5. Secondary cable may be attached to these poles, but live legs shall not be connected through.
6. Care should be taken to install platform structures in locations where their visibility to the public is minimized.
7. Transformers must be bolted to platform. Bolts and sound pads will be included with platform.
8. Source and load-side cutouts may be installed on crossarm shown, on adjacent poles, or on 21’ crossarm above the transformers.
9. Use 35 kV rated polymer suspension insulators **Item #522669** for phase breaks.
10. Select step transformer from **CAT 2014.**
11. Refer to **DTR 17.500** for more detail on overhead step transformer construction.
12. Install a super extra heavy-duty platform for transformers weighing up to 7,266 lbs. each. Install a super extra heavy-duty center pole brace kit for transformers weighing above 7,266 lbs. each.

Construction Standard Variation		Construction Reference Document
A	STEP TRANSFORMER PLATFORM UP TO 7,266 LBS PER POSITION	DTR17.046.1A
B	CENTER BRACE POLE KIT OVER 7,266 LBS PER POSITION	DTR17.046.0B
C		
D		
E		
F		
G		
H		
I		
J		
K		
L		
M		

U= Capital Item M= Standard Item L = Lobby

M	L	K	J	I	H	G	F	E	D	C	B	A	UM	Item Description	Item Number	
												1	EA	PLATFORM EQUIPMENT 18' X 4' MAX WT 7,266 LBS PER POSITION	M	566849
											1		EA	POLE KIT EXTRA F/2EHD PLATFORMS	M	566319
												1	EA	CROSSARM FIBERGLASS 21 FT 3-5/8 X 4-5/8 IN SQ HDW/HOLES	M	566485
											2	14	EA	BOLT MACHINE GS 3/4 X 16 IN W/SQ NUT	L	536269
												3	EA	INSULATOR SUSP POLYMER SILC 35 KV	L	522669
												3	EA	LINK STRAIGHT G 3-1/4 X 5/8 IN 40M	L	551441
											4	32	EA	WASHER SQUARE FLAT GS 2-1/4 IN 13/16 H	L	539282
												2	EA	BOLT MACHINE GS 5/8 X 24 IN SQ HEAD W/SQ NUT	L	536261
												75	FT	CABLE COVERED EPR TAP CU 4/0 37 STR SD	L	513408
												24	EA	CONN BAR CU 6 TO 250 KCMIL	L	516327

EVERSOURCE	CONSTRUCTION STANDARD ELECTRIC OPERATIONS ORGANIZATION

Design Guide for Platform Mounted Installations

Document Number:	Issued Date:	Revised Date:	Revision:	Applicability:
DTR 20.360	21-Apr-20	21-Aug-26	2	ALL

*****This Document Supersedes DTR 20.403*****

Scope:

This document provides guidance for the methods of setting distribution poles that support voltage regulator and transformer platforms.

Safety:

Providing a work environment, free of recognized hazards is a value at Eversource. Therefore, prior to the start of any work, ensure that you are familiar and knowledgeable with all Eversource Safety Rules, Policies and Procedures that are applicable to the work and tasks at hand and perform a job brief at the job site, prior to commencing work. PPE requirements to protect the worker shall be followed as required in the Eversource Employee Safety Manual.

Approved by: *Signature on File* Date: 18-Aug-26
Chad Gandolfi
Manager, T&D Standards Engineering

Rev No.	Description	Date
2	Consolidated with DTR 20.403. Updated scope to include transformers, added additional references & designs options.	August 21, 2026
1	Reviewed per NESC 2023	November 10, 2023
0	Original Document	April 21, 2020

Table of Contents

Section		Page
1.0	Introduction	3
2.0	Reference Documents	3
3.0	General	3
4.0	Design Options	3
5.0	Soil Evaluation	5
6.0	Regulator Platform Design Options	6

1.0 Introduction

1.1 Multiple voltage regulators set on platforms are extremely heavy and require additional structural support, particularly when poles are set in poor soil. Additional setting depths and support are necessary to prevent poles from shifting. This document provides designs for a stable footing.

1.2 Portions of this work may require the use of heavier construction equipment than is typically used in the installation of utility poles.

1.3 The designs in this document should not be assumed to be applicable to all field conditions. Site conditions factors shall be considered before utilizing this standard, including the actual soil strengths, existing ground water table, and pole loading. When this standard is deemed necessary, it shall be used exactly per the details shown.

2.0 Reference Documents

DTR 20.400	Voltage Regulator Installations & Grounding, WYE and Delta
DTR 16.711	Platform Mounted Regulator Grounding and Notes
DTR 20.361	35 kV MGY & Below – Three Regulators Installation
DTR 20.371	35 kV Delta/UGY & below – Two or Three Regulators Installation
DTR 20.051	MGY Regulator Bypass Switch Guide
DTR 20.052	Delta Regulator Bypass Switch Guide
DTR 16.201	Overhead Grounding & Bonding Guide
DTR 16.211	Grounding on Overhead Multi-grounding Primary System
DTR 16.411	Grounding on Overhead Delta or Unigrounded Primary System
DTR 16.311	MGY – Equipment and Control Grounding
DTR 16.413	Delta or Unigrounded - Equipment and Control Grounding
DTR 05.045	Steel Casing for Distribution Poles

3.0 General

3.1 Dig Safe procedures must be adhered to prior to any excavation.

3.2 Distribution Poles shall be installed on level ground/ surface whenever possible, a minimum of 6 feet from any sloping grade.

3.3 If an installation location has been reviewed by Engineering and deemed unavoidable, the slope shall NOT be steeper than a grade of one vertical foot by four horizontal feet; a 25 percent maximum slope.

4.0 Design Options

4.1 Three (3) regulator designs are offered to assure stability. Designs outside of these criteria should be reviewed by T&D Standards Engineering. Design criteria are based on three (3) regulators of 8,100 lbs. each.

4.2 No pole shall be installed in a wetland or State resource area without prior approval from Eversource, the local City/Town Conservation Department and/or other Environmental Protection Agencies that have jurisdiction.

4.3 Unstable soil shall be considered soil that does not conform to a minimum classification as clay, sandy clay, silty clay, or does not have an allowable minimum lateral bearing pressure of 1500 psf. If there is doubt about the suitability of the bearing surface at the proposed depth, a soil boring may be required.

4.4 The pole shall be installed within a steel casing pipe, or caisson, under certain conditions as dictated by tables 1 and 2. Instructions for caisson type construction are provided in **DTR 05.045**.

4.5 Below are the required foundations per construction structure placement and soil condition. When a design is selected from **Table 2**, match the associated letter of the site's soil condition to the required foundation embedment listed in **Table 1**. See **Section 5.0** for information on soil evaluation.

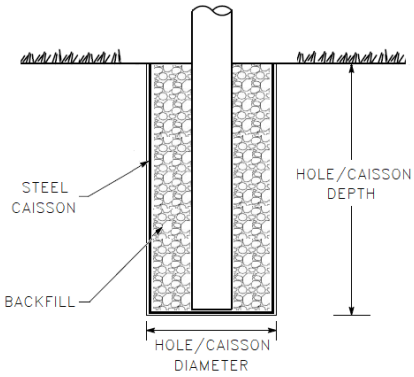

Table 1

Foundation Legend	
A	10' Wood pole embedment
B	10',36" Caisson embedment
C	12',36" Caisson embedment
D	14',48" Caisson embedment

Table 2 – Required Foundation per Structure Placement and Soil Condition

Regulator Platform Construction, Conductor Loading Condition	Pole Class	Strong Soils				Weak Soils			
		Dry		Saturated		Dry		Saturated	
		Granular	Cohesive	Granular	Cohesive	Granular	Cohesive	Granular	Cohesive
Tangent construction, full conductor tension w/ minimal deflection & plumbness	H2	A	A	B	B	B	B	D	C
Slack Span w/ minimal deflection & plumbness	Class 1	A	A	B	B	B	B	C	C
Platform offset from conductor run, No wire tension or plumbness	Class 1	A	A	B	A	B	B	C	C

5.0 Soil Evaluation

5.1 A site evaluation shall be conducted to determine soil types. Previously disturbed soil and man-made backfill should be avoided when possible.

5.1.1 **Cohesive soil** is defined as sticky soil and can be termed as clay or sticky clay. Cohesive soil does not crumble and is hard to break up when dry.

5.1.2 **Granular soil** contains gravel, sand, or silt (coarse grained soil) with little or no clay content. Granular soil cannot be molded when moist and crumbles easily when dry

5.2 If soil conditions are questionable, an Eversource approved Contractor shall be used to perform a site evaluation.

Table 3 – Soil Definitions

Soil Type	Total Unit Wt. (pcf)	Friction Angle (Deg)	Cohesion
Strong, Granular	116	39	
Strong, Cohesive	120		1900
Weak, Granular	102	33	
Weak, Cohesive	113		1000

6.0 Regulator Platform Design Options

Design Option 1 – Conductors under tension.

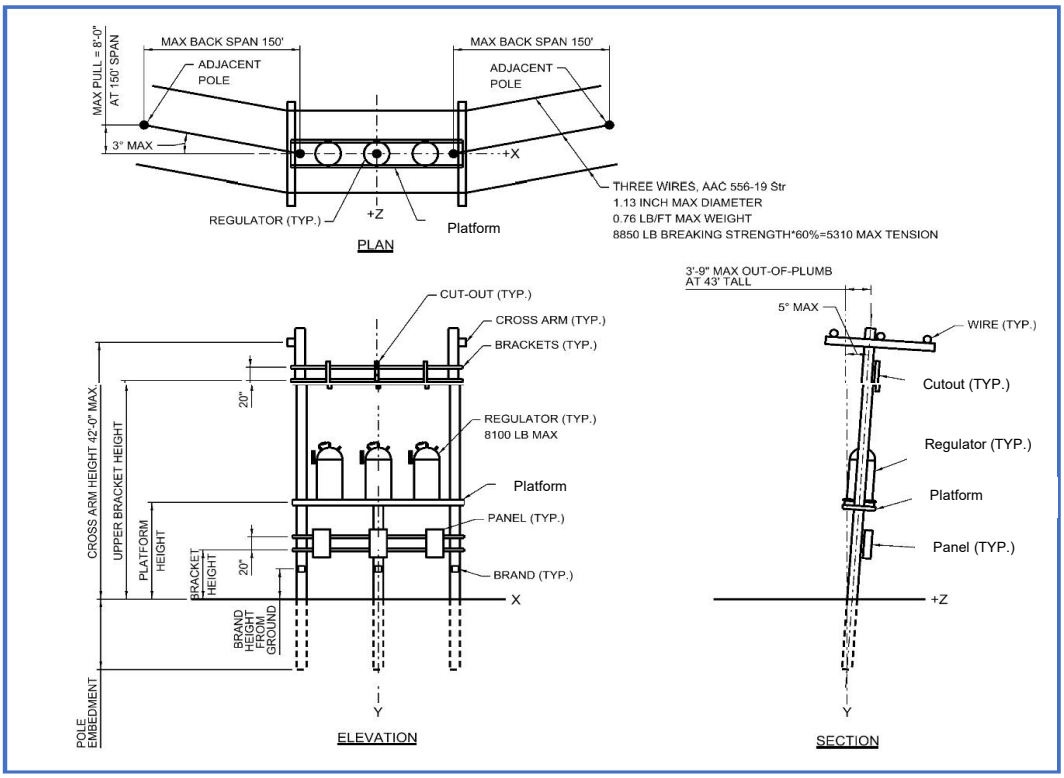

CONDUCTORS

Number of wires:	three (3) 566 AAC – 19 Str
Tension:	5310 lb. each (60% of 8850lb breaking strength per NESC 261.H.1
Span:	150 feet
Pull:	8 feet at 150 foot span (3 degrees)

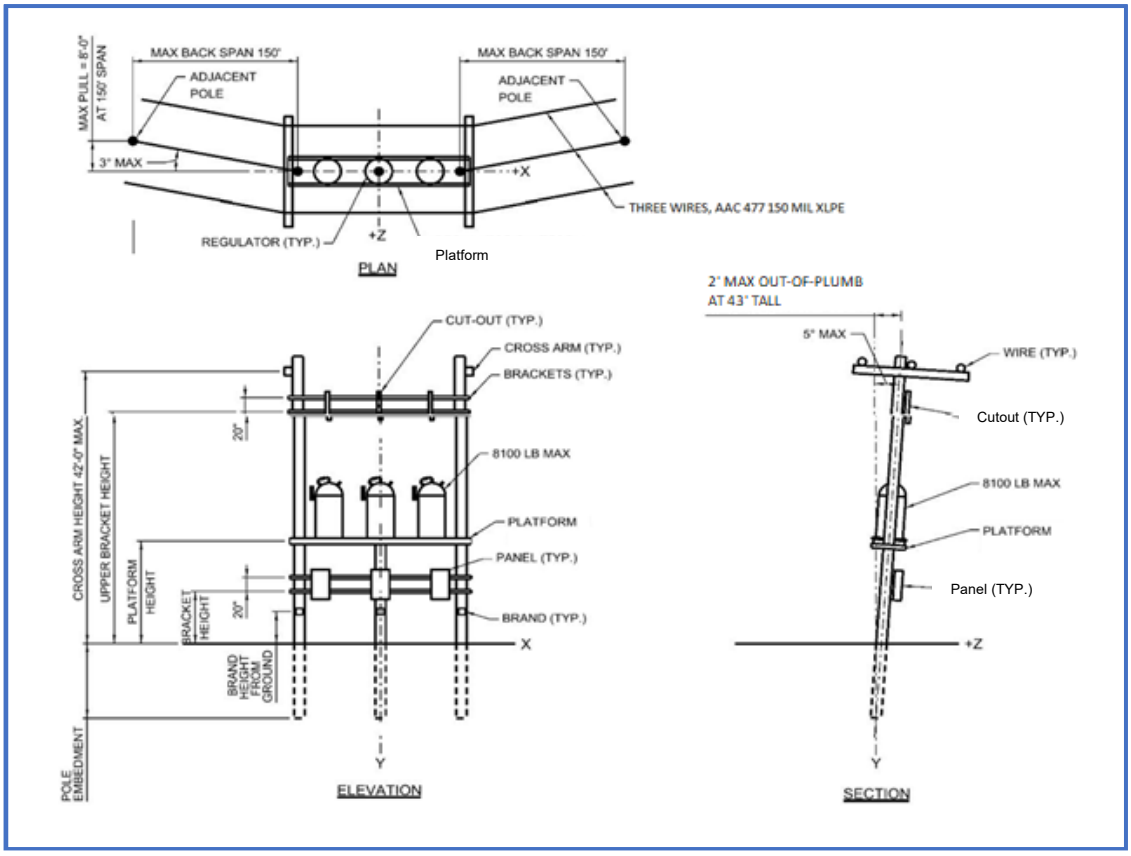

CONDUCTORS

Number of wires:	three (3) 477 AAC – 150 mil XLPE Covering
Tension:	5016 lb. each (60% of 8360lb breaking strength per NESC 261.H.1
Span:	150 feet
Pull:	8 feet at 150 foot span (3 degrees)

Design Option 2 – Conductors with slack spans.

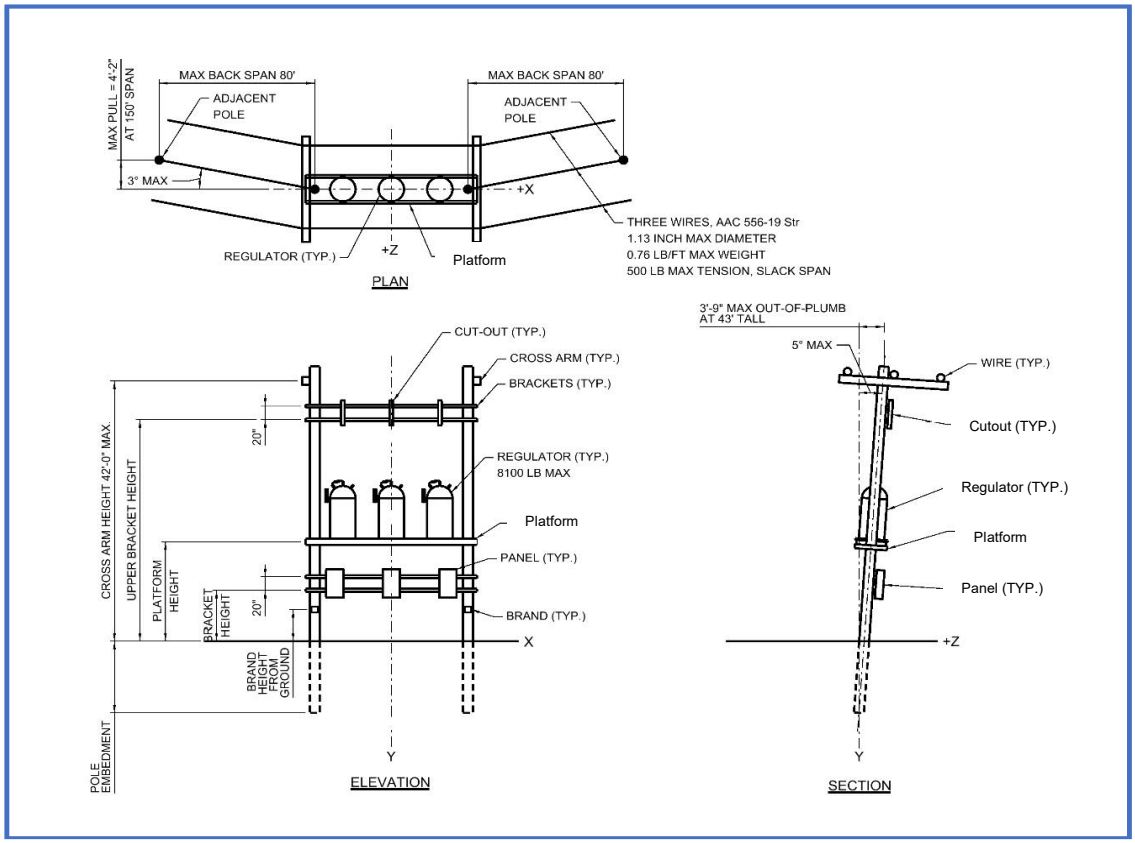

CONDUCTORS

Number of wires:	three (3) 566 AAC – 19 Str
Tension:	500 lb. each (slack span
Span:	80 feet
Pull:	4.2 feet at 80 foot span (3 degrees)

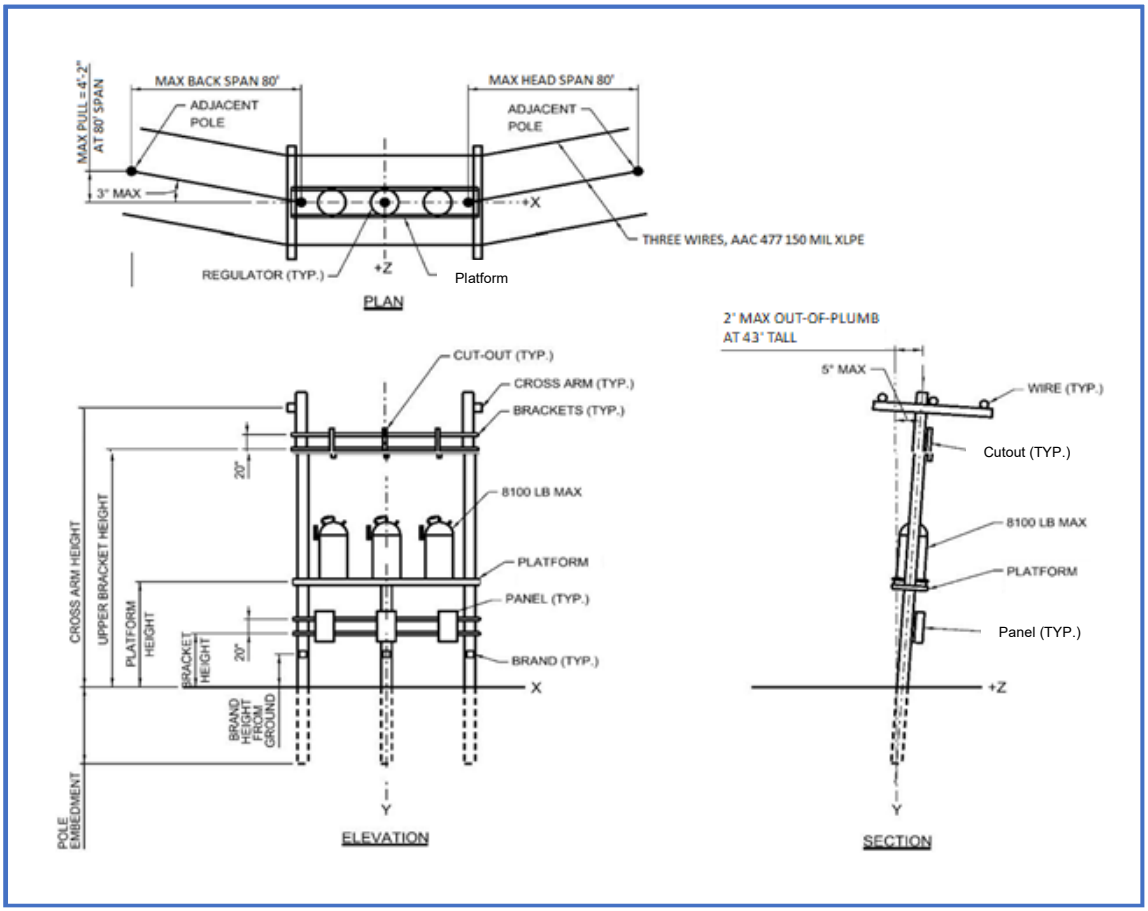

CONDUCTORS

Number of wires:	three (3) 477 AAC – 150 mil XLPE Covering
Tension:	500 lb. each (slack span)
Span:	80 feet
Pull:	4.2 feet at 80 foot span (3 degrees)

Design Option 3 – No conductor tension. Platforms offset to the side of the circuit.

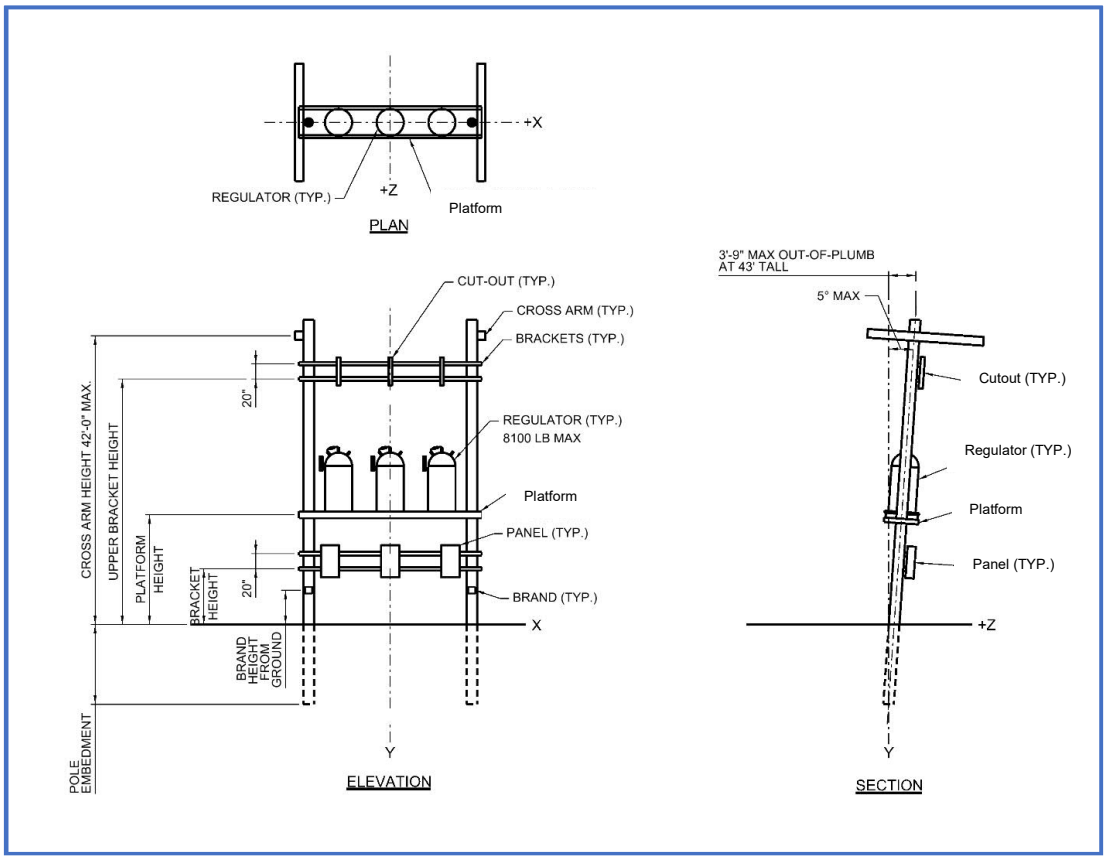

CONDUCTORS

Number of wires:	None
Tension:	0 lb. each
Span:	0 feet
Pull:	0 feet at 0 foot span (0 degrees)

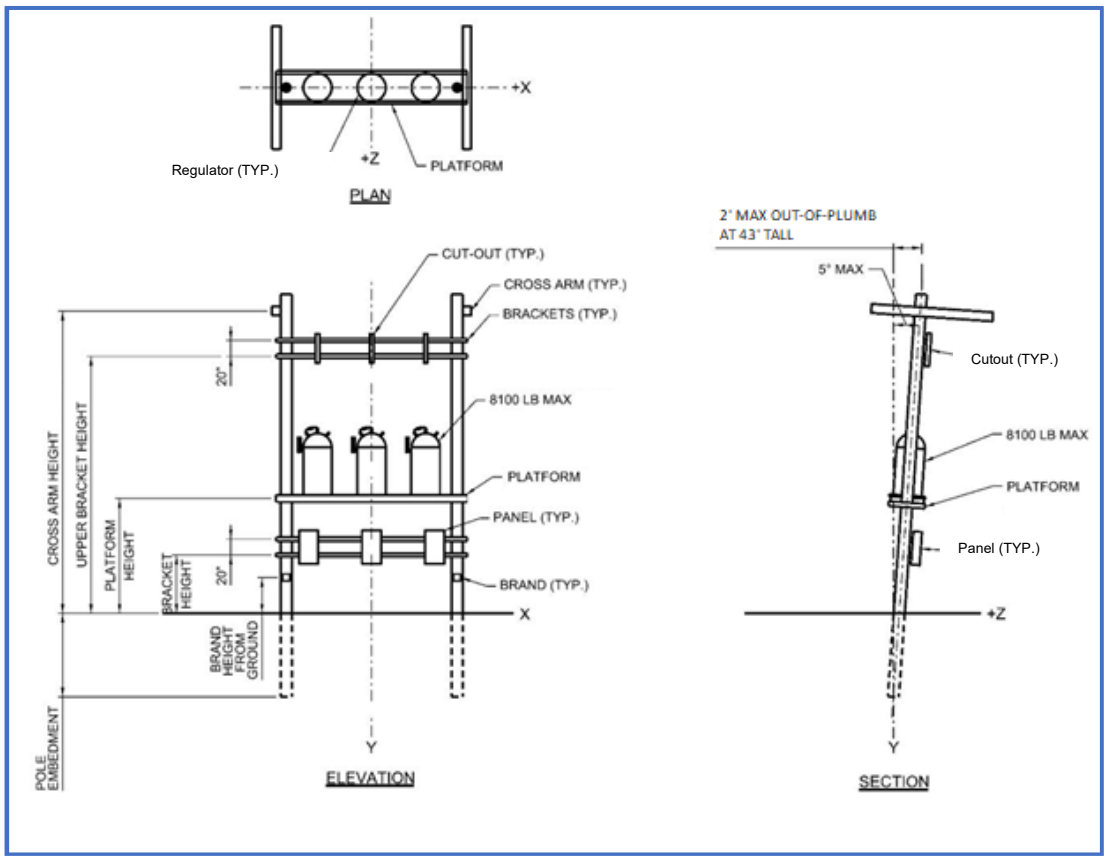

CONDUCTORS

Number of wires:	None
Tension:	0 lb. each
Span:	0 feet
Pull:	0 feet at 0 foot span (0 degrees)

This Document Supersedes DTR 20.404 STRUCTURE LIMIT C1

SELECT POLE TOP FROM SECTION 10

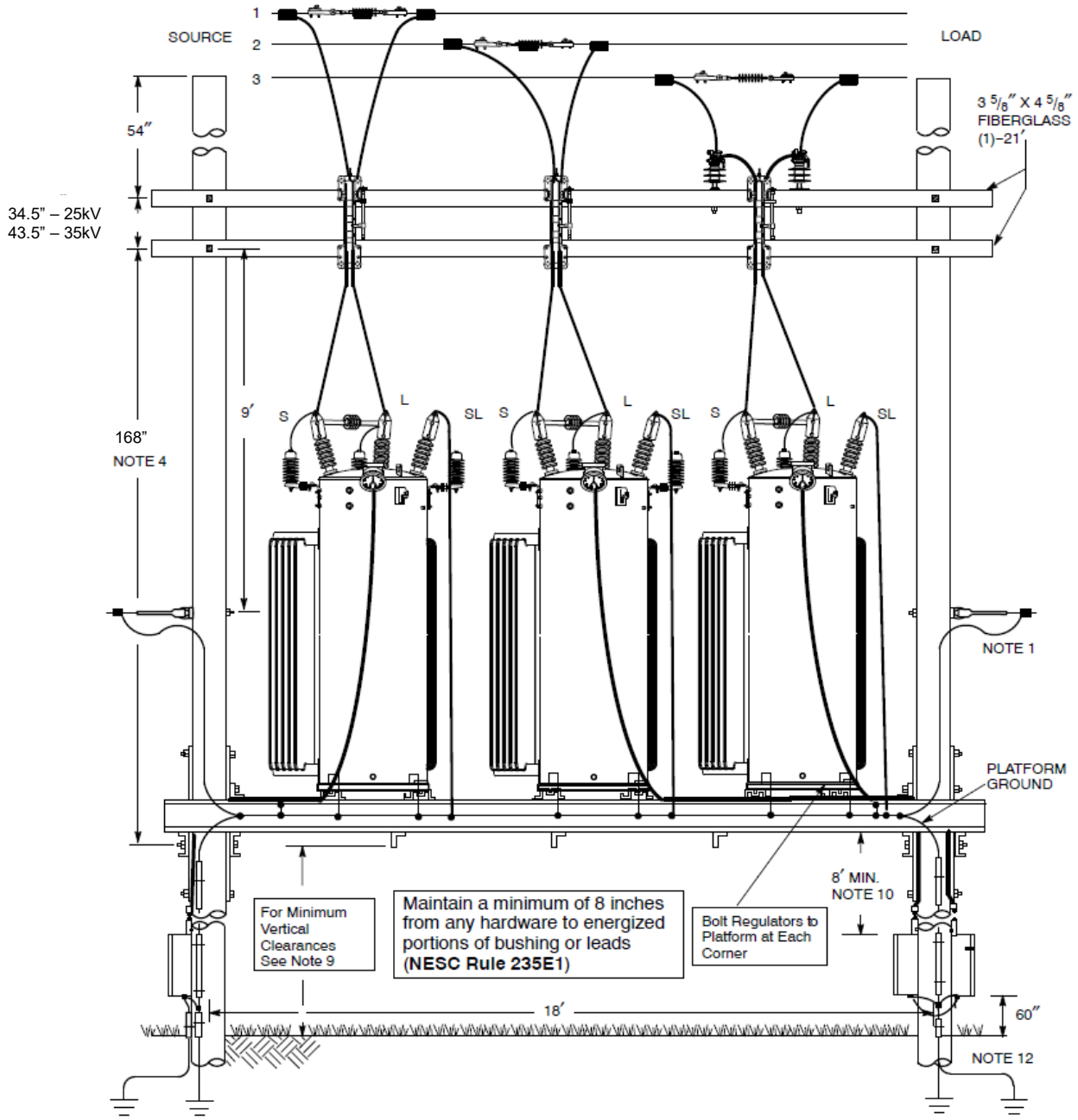

ORIGINAL 08/09/94 APPROVED 09/11/26 CJ	**35 KV MGY & BELOW – THREE REGULATORS INSTALLATION**			**ALL**
	EVERSOURCE ENERGY	CONSTRUCTION STANDARD	**DTR 20.361**	**8**

Notes

1. For secondary and neutral attachment point refer to **DTR 04.047**.
2. Arresters must be mounted at both load and source side bushings.
3. Poles shall be minimum Class 1. Refer to **DTR 20.360** which provides guidance on methods of setting poles associated with platform installations. Refer to **DTR 05.303** which provides guidance on methods of steel casing foundation for distribution poles.
4. Mount the platform to the poles with three quarter inch bolts. Install the platform per dimension which takes into account the overall height of the regulators. The following table includes regulators that are platform mounted.

Regulator Voltage	kVA
2,500	333
7,620	333
	416
14,400	432
	576
	667
	833
19,920	400
	833

5. Install a super extra heavy-duty platform for regulators weighing up to 7,266 lbs. each. Install a super extra heavy-duty pole kit for regulators weighing above 7,266 lbs. each. Refer to **Section 06** for typical regulator weights.
6. Ensure that animal guards are installed on all regulator and arrester bushings.
7. **CAUTION:** Regulators must always have their tap changers in the neutral position before they are put on or taken off an energized line; otherwise, a violent regulator failure could occur. **If the tap changer cannot be placed in the neutral position, the circuit must be de−energized prior to taking the regulator off the line**. Refer also to **DTR 20.051** which provides a guide regards to bypass switch sequence of operations.
8. Platform ground and neutral conductor shall be the same size as or larger than the system neutral.
9. For minimum vertical clearances refer to **Section 04**. Consider the platform as a Category 1 conductor.
10. **CAUTION:** Minimum distance from the top of the control box to the lowest point of the platform or supporting braces shall be a minimum eight feet. An alternate location for mounting the control boxes is on a separate structure.
11. Care should be taken to install platform structures in locations where their visibility to the public is minimized.
12. See **DTR 16.201** for overhead grounding and bonding guide. Refer to **DTR 16.711** for platform mounted regulator grounding and **DTR 16.311** for control grounding. Connect all grounds before connecting taps to an energized circuit.
13. Refer to **DTR 20.115**, Figure 4 for regulator connections.

Construction Standard Variation		Construction Reference Document
A	REGULATOR PLATFORM 15-25 KV REG UP TO 7,266 LBS	DTR20.361.6A
B	REGULATOR PLATFORM 35 KV REG UP TO 7,266 LBS	DTR20.361.6B
C	CENTER BRACE F / REGULATOR PLATFORM OVER 21,798 LBS TOTAL	DTR20.361.6C
D	35 KV SUSPENSION INSULATOR	DTR20.361.5D
E		
F		
G		
H		
I		
J		
K		
L		
M		

U= Capital Item M= Standard Item L = Lobby

M	L	K	J	I	H	G	F	E	D	C	B	A	UM	Item Description	Item Number	
											1	1	EA	PLATFORM EQUIPMENT 18' X 4' MAX WT 7,266 LBS PER POSITION	U	566849
												3	EA	SWITCH OTDR AIR HKO DSCQ RGBP UHG 25KV 600A	U	531317
											3		EA	SWITCH OTDR AIR HKO DSCQ RGBP UHG 38KV 600A	U	531322
											3	3	EA	CROSSARM FIBERGLASS 21 FT 3-5/8 X 4-5/8 IN SQ HDW/HOLES	M	566485
										1			EA	POLE KIT EXTRA F/2EHD PLATFORMS	M	566319
											9	9	EA	SHIELD POLE RISER PVC 2 IN X 10 FT	M	529240
											6	6	EA	BOLT MACHINE GS 3/4 X 14 IN W/SQ NUT	L	536268
											2	2	EA	BOLT MACHINE GS 5/8 X 20 IN	L	516039
											2	2	EA	BOLT MACHINE GS 5/8 X 24 IN SQ HEAD W/SQ NUT	L	536261
										2			EA	BOLT MACHINE GS 3/4 X 16 IN SQ HEAD W/SQ NUT	L	536269
											75	75	FT	CABLE COVERED EPR TAP CU 4/0 37 STR SD	L	513408
											24	24	EA	CONN BAR CU 6 TO 250 KCMIL	L	516327
									3				EA	INSULATOR SUSP POLYMER SILC 35 KV	L	522669
									3				EA	LINK STRAIGHT G 3-1/4 X 5/8 IN 40M	L	551441
											72	72	EA	SCREW DRIVE 0.25 IN 2.5 IN LG GAL HEX HEAD W/NEO WSHR	L	538042
										2	8	8	EA	SCREW LAG TD PPT G 1/2 X 4 IN	L	538046
									2	2			EA	WASHER LOCK DCS GS 4/4 IN	L	538785
										2	14	14	EA	WASHER SQUARE FLAT GS 2-1/4 IN 13/16 H	L	539282
											3		EA	PLATE,BASE FOR 38 KV REGULATOR BYPASS SWITCH	L	589085

This Document was Supersedes DTR 20.372 & 20.373

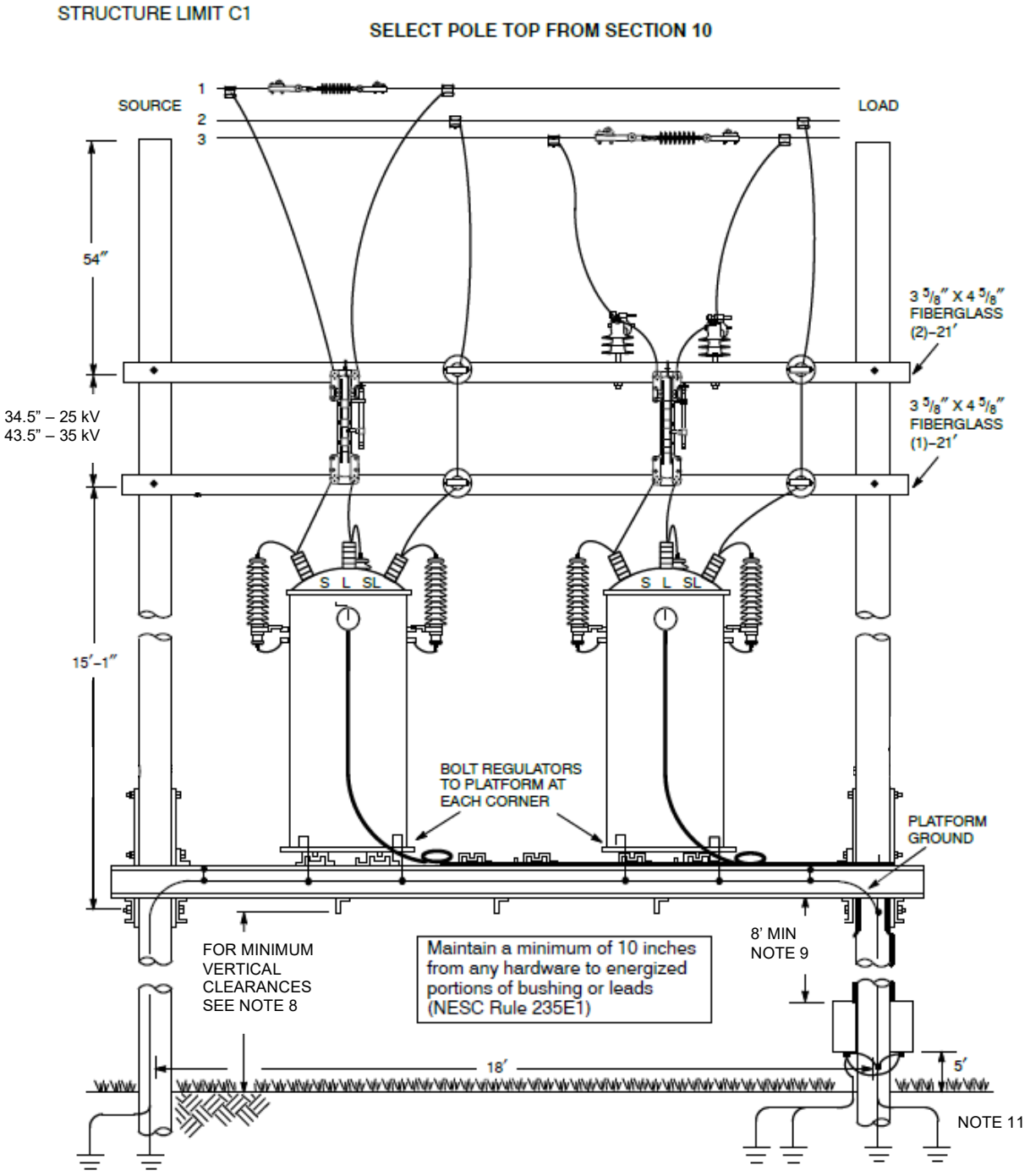

ORIGINAL 08/09/94 APPROVED 09/04/26 CJ	**35 KV DELTA/UGY & BELOW – TWO OR THREE REGULATORS INSTALLATION**			**ALL**
	EVERSOURCE ENERGY	CONSTRUCTION STANDARD	**DTR 20.371**	**8**

This Document was Supersedes DTR 20.372 & 20.373

STRUCTURE LIMIT C1

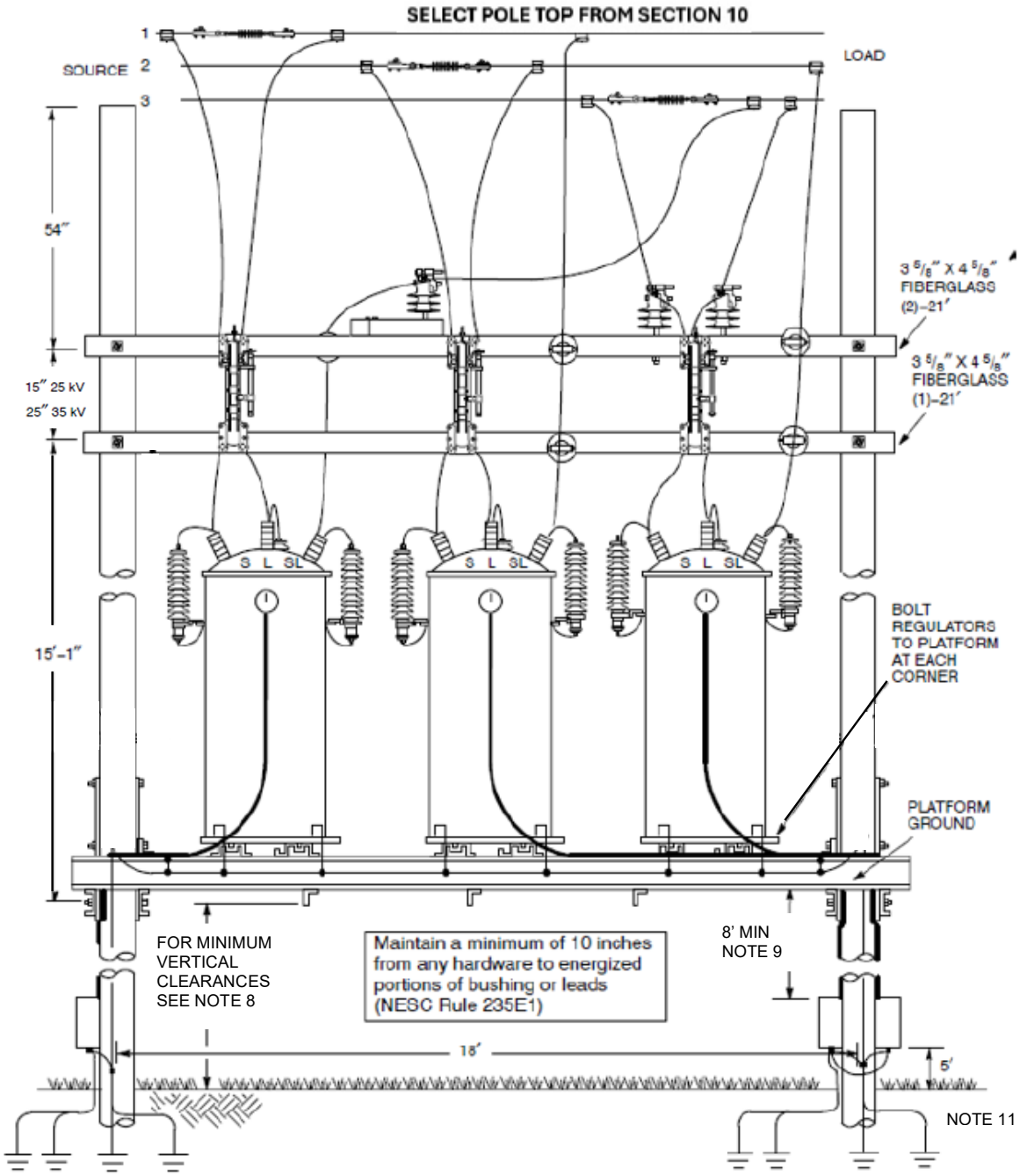

ORIGINAL	35 KV DELTA/UGY & BELOW – TWO OR THREE REGULATORS INSTALLATION			ALL
08/09/94				
APPROVED				
09/04/26	EVERSOURCE ENERGY	CONSTRUCTION STANDARD	DTR 20.371	8

CJ

Carl W. Peterson

This Document was Supersedes DTR 20.372 & 20.373

Notes

1. Arresters must be mounted at both load and source side bushings. Select arresters, if necessary, from **Section 16**.
2. Poles shall be minimum Class 1. Refer to **DTR 20.360** which provides guidance on methods of setting poles associated with platform installations. Refer to **DTR 05.303** which provides guidance on methods of steel casing foundation for distribution poles.
3. Mount the platform to the poles with three quarter inch bolts.
4. Install a super extra heavy-duty platform for regulators weighing up to 7,266 lbs. each. Install a super extra heavy-duty pole kit for regulators weighing above 7,266 lbs. each. Refer to **Section 06** for typical regulator weights.
5. Install animal guards on all regulator and arrester bushings.
6. **CAUTION:** Regulators must always have their tap changers in the neutral position before they are put on or taken off an energized line; otherwise, a violent regulator failure could occur. **If the tap changer cannot be placed in the neutral position, the circuit must be de−energized prior to taking the regulator off the line**. Refer also to **DTR 20.051** which provides a guide regards to bypass switch sequence of operations.
7. Platform grounds shall be #2 copper.
8. For minimum vertical clearances refer to **Section 04**. Consider the platform as a Category 1 conductor.
9. **CAUTION:** Minimum distance from the top of the control box to the lowest point of the platform or supporting braces shall be a minimum eight feet. An alternate location for mounting the control boxes is on a separate structure.
10. Care should be taken to install platform structures in locations where their visibility to the public is minimized.
11. See **DTR 16.201** for overhead grounding and bonding guide. Refer to **DTR 16.711** for platform mounted regulator grounding and **DTR 16.413** for control grounding. Connect all grounds before connecting taps to an energized circuit.
12. For two regulators on a three-phase system, refer to **DTR 20.116,** Figure 2 for regulator connections. For three regulators on a three-phase system, refer to **DTR 20.116**, Figure 3 for regulator connections.

Construction Standard Variation		Construction Reference Document
A	REGULATOR PLTFRM 2XHD 15-25KV 2-REG UP TO 9,334 LBS EA	DTR20.371.3A
B	REGULATOR PLTFRM 2XHD 35KV 2-REG UP TO 9,334 LBS EA	DTR20.371.3B
C	REGULATOR PLTFRM 2XHD 15-25KV 3-REG UP TO 9,334 LBS EA	DTR20.371.3C
D	REGULATOR PLTFRM 2XHD 35KV 3-REG UP TO 9,334 LBS EA	DTR20.371.3D
E	SUSP INS FOR 2-PHASES	DTR20.371.3E
F	SUSP INS FOR 3-PHASES	DTR20.371.0F
G	CENTER BRACE FOR REGULATOR PLATFORM OVER 9,334 LBS	DTR20.371.0G
H		
I		
J		
K		
L		
M		

U= Capital Item M= Standard Item L = Lobby

M	L	K	J	I	H	G	F	E	D	C	B	A	UM	Item Description	Item Number	
									25	25	25	25	FT	CABLE BARE CU #2 7 STR SD F/GRD	U	503602
									1	1	1	1	EA	PLATFORM EQUIPMENT 18' X 4' MAX WT 9,334 LBS PER POS	U	566849
										3		2	EA	SW OTDR AIR HKO DSCG RGBP UHG 25KV 600A	U	531317
									3		2		EA	SW OTDR AIR HKO DSCG RGBP UHG 38KV 600A	U	531322
									3	3	3	3	EA	CROSSARM FIBERGLASS 21 FT 3-5/8 X 4-5/8 IN NO HDW/HOLES	M	566485
						1							PR	POLE KIT EXTRA F/2EHD PLATFORMS	M	566319
									6	6	6	6	EA	BOLT MACHINE GS 3/4 X 14 IN W/SQ NUT	L	536268
									2	2	2	2	EA	BOLT MACHINE GS 5/8 X 20 IN	L	536260
									2	2	2	2	EA	BOLT MACHINE GS 5/8 X 24 IN SQ HEAD W/SQ NUT	L	536261
						2							EA	BOLT MACHINE GS 3/4 X 16 IN SQ HEAD W/SQ NUT	L	536269
									25	25	25	25	FT	CABLE BARE CU MHD #2 7 STR	L	513340
									75	75	50	50	FT	CABLE COV EPR TAP CU 4/0 37 STR SD	L	513408
									24	24	16	16	EA	CONN BAR CU 6 TO 250 MCM	L	516327
							3	2					EA	INSULATOR SUSP POLYMER SILC 35 KV 10M CLV FIT 18-20 IN	L	522669
							3	2					EA	LINK STRAIGHT G 3-1/4 X 1 X 5/8 IN 40M	L	551441
						2			8	8	8	8	EA	SCREW LAG TD PPT G 1/2 X 4 IN	L	538046
									4	4	4	4	EA	WASHER LOCK DCS GS 5/8 IN	L	538784
						4							EA	WASHER LOCK DCS GS 3/4 IN	L	538785
						2			14	14	14	14	EA	WASHER SQUARE FLAT GS 2-1/4 IN 13/16 H	L	539282
									3		2		EA	PLATE,BASE FOR 38 KV REGULATOR BYPASS SWITCH	L	589085