Maintenance & services for the LM6000 aeroderivative gas turbine

imagination at work

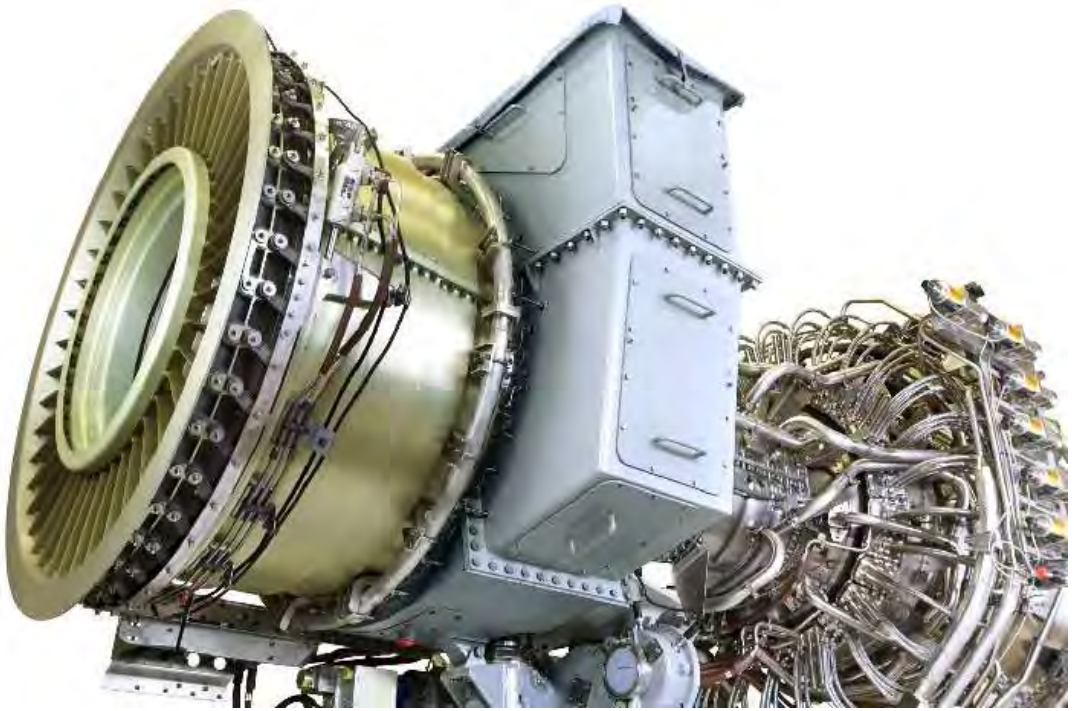

LM Maintenance Philosophy

Maximize Availability at a Minimum Cost

1. **On-Condition Maintenance**
   - Easy to inspect internally allows for well-planned outages and repair only as necessary.
2. **Maximize On-Site Maintenance Capability**
   - Provide detailed work-scope for all on-site activities
3. **Minimize customer operation downtime during major maintenance actions**
   - Maximum 2-4 day outage with spare or lease engines



With proper planning the gas turbine should not interrupt the electric production demands. The time to do maintenance on the LM6000 gas turbine is easily scheduled during off-hours

imagination at work

© 2012 General Electric Company. Proprietary. All Rights Reserved.

Wide Range of Operating Schemes

LM units reporting to ORAP® for 12 month period ending July 2012

Source: ORAP®; All rights reserved: SPS®

	No. of units	Avg hours	Avg starts
LM6000	257	2767	118

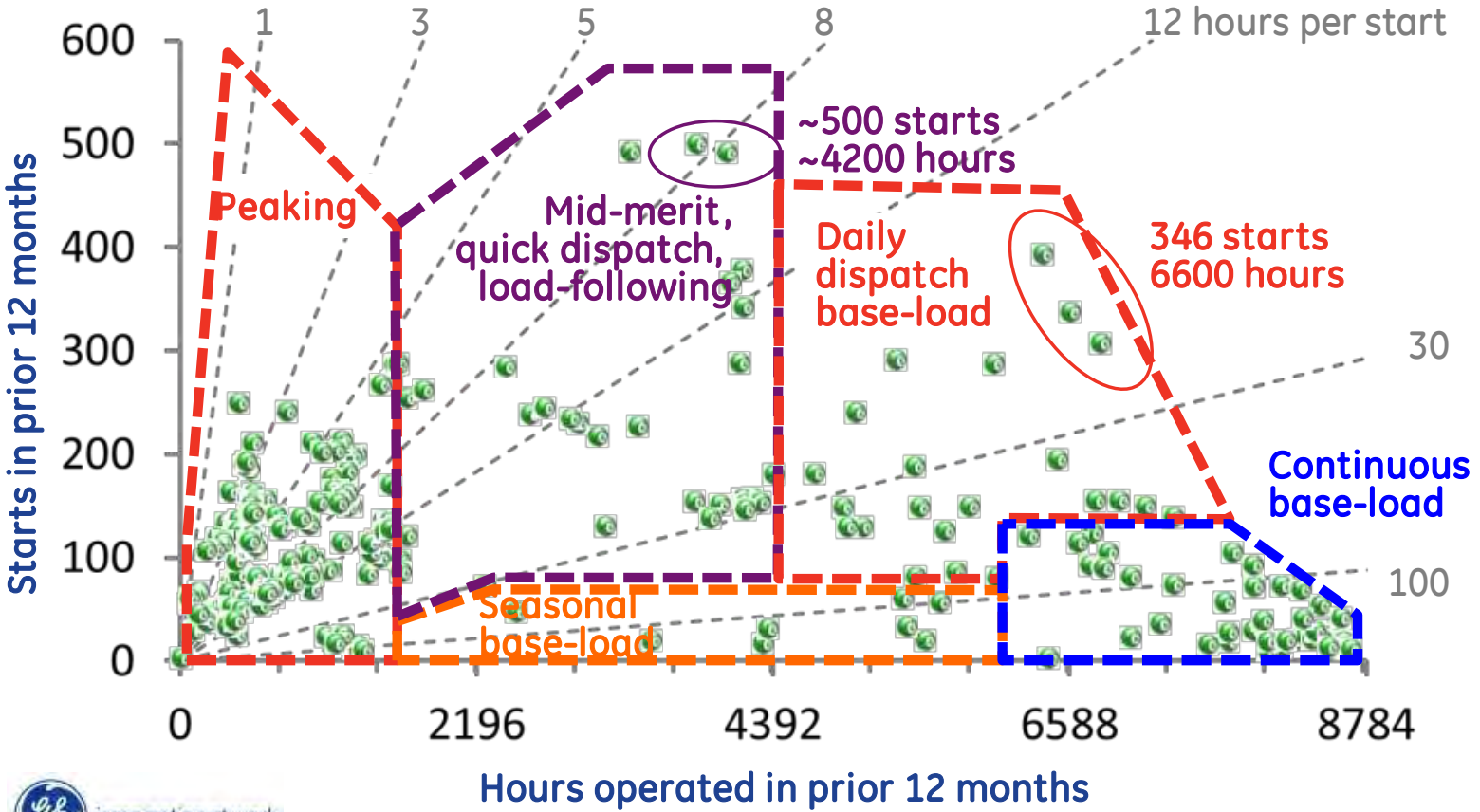

imagination at work

© 2012 General Electric Company. Proprietary. All Rights Reserved.

Maintenance Philosophy

Leveraging from the aircraft philosophy to optimize on-site maintenance and maximize availability

Modular Design

- Major Component Exchanges
- Easy to Handle & Transport
- Rotors / Stators Nominally
- Ground for Easy Interchange

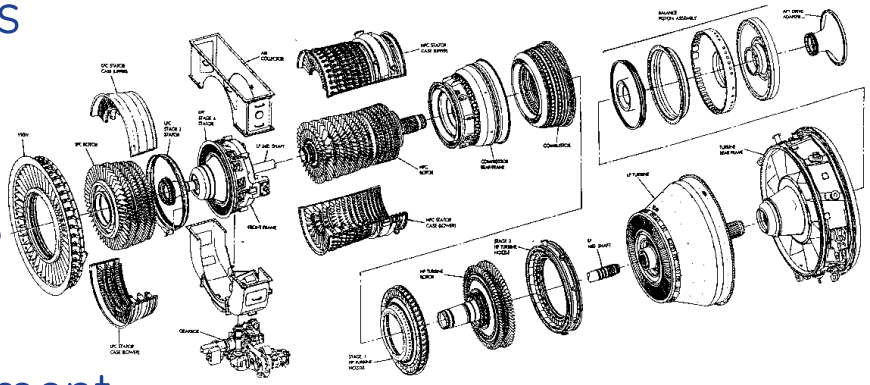

Split Case Design

- Ease of Component Replacement
- Blade Replacement & Repair
- Compressor Cases
- Detailed Work Packages and Customer or GE Tooling

© 2012 General Electric Company. Proprietary. All Rights Reserved.

Levels of Maintenance

Level I Preventative and corrective actions performed on exterior of installed gas turbine (Includes gas turbine change out)

Level II Level I plus interior gas turbine actions performed ON-SITE

On-Site

Level III Level II plus disassembly and assembly of gas turbine down to EMU (Engine Maintenance Unit) level.

Depot/ On-Site

Level IV Level III plus complete disassembly and assembly of EMUs. Allows replacement of any individual piece part. Test capability required

Depot

Level V* Level IV plus repair of piece parts and control and accessory items. (*Does not exist as single entity)

© 2012 General Electric Company. Proprietary. All Rights Reserved.

On-Condition Maintenance
(For Scheduled and Corrective Maintenance)



"On-Condition"

- Inspect and Repair as Necessary to Restore to Desired Operational Condition

Condition Determined by:

- Borescope Inspection Ports
- Vibration Data Monitoring
- Performance Data Monitoring
- Lube Oil Filter and Screen Inspection
- Lube Oil Analysis
- External Engine Inspections
- Re-Start Inspections & Operational Check



imagination at work

© 2012 General Electric Company. Proprietary. All Rights Reserved.

Planned Maintenance

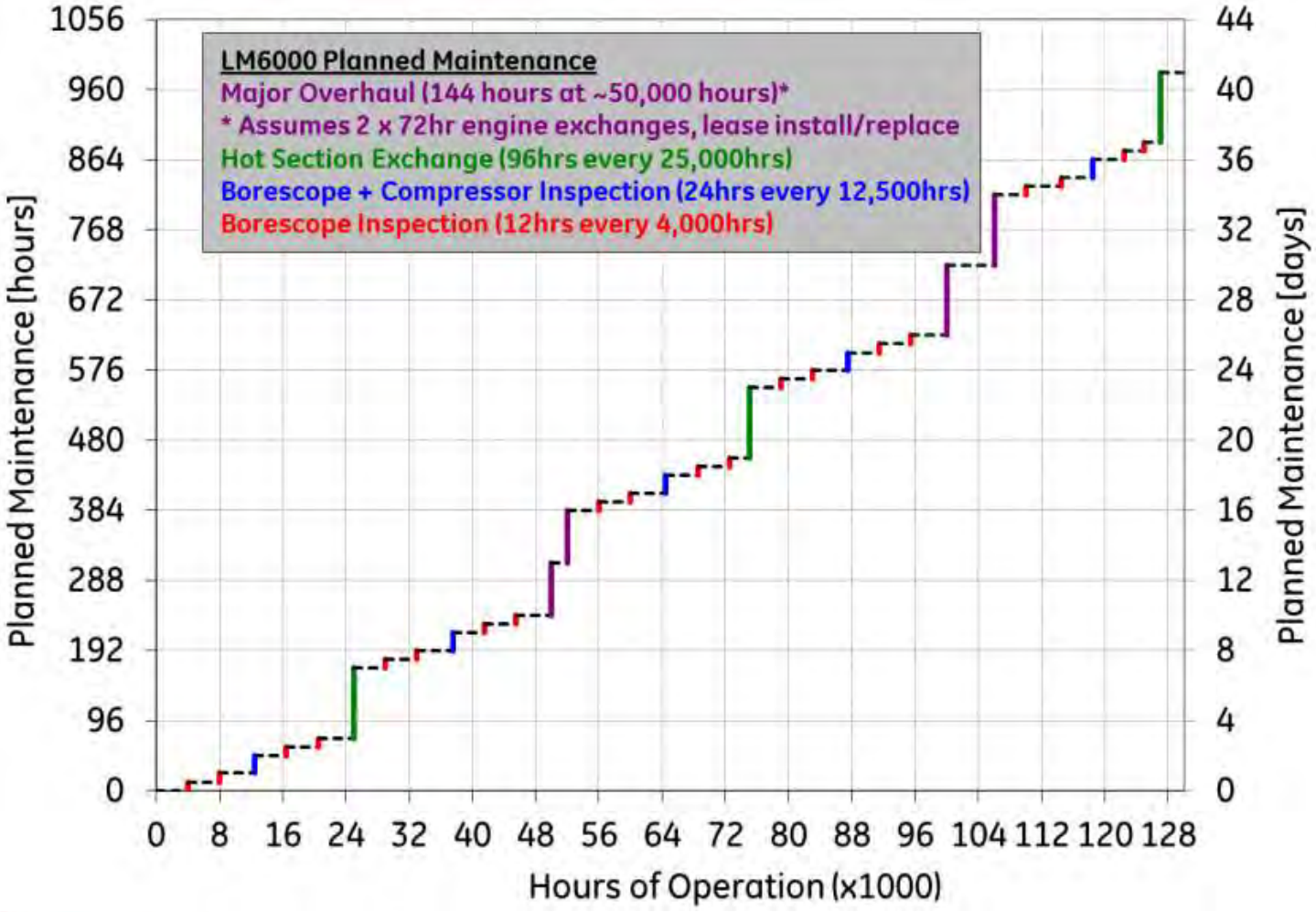

imagination at work

© 2012 General Electric Company. Proprietary. All Rights Reserved.

Typical Scheduled Maintenance

Actual Maintenance is "On-Condition"

Hours	Scheduled Maintenance Action	Outage
4,000	Inspection (Every 4000 Hours)**	12-16 hours
25,000	On-Site Hot Section Replacement	3 days
50,000	Depot Refurbishment*	2-3 days
75,000	On-Site Hot Section Replacement	3 days
100,000	Depot Refurbishment*	2-3 days
125,000	On-Site Hot Section Replacement	3 days

* Spare or lease engine installed during refurbishment.
** At 12,500 hours (or concurrent with every 3rd borescope) the LM6000 compressor bushing are replaced. Including borescope and bushing change this outage can take up to 24 hours
Maintenance intervals above are based on **gas fuel** operation.
Actual moment to conduct the **maintenance action is** still **determined by the condition of the hardware not the actual hour count**.

imagination at work

© 2012 General Electric Company. Proprietary. All Rights Reserved.

Borescope Inspections

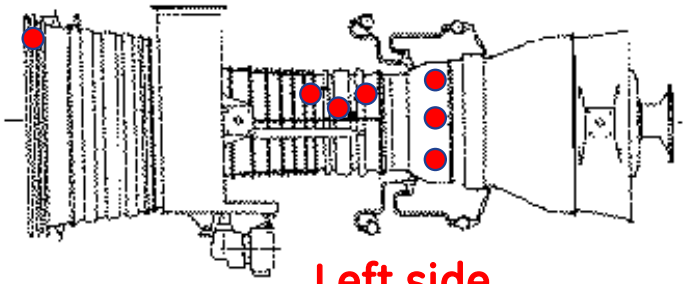

Left side

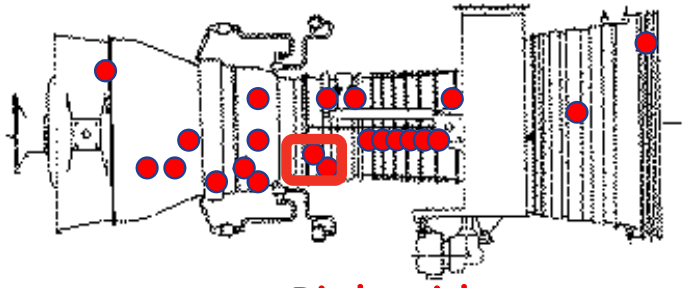

Right side

Stage 13 port

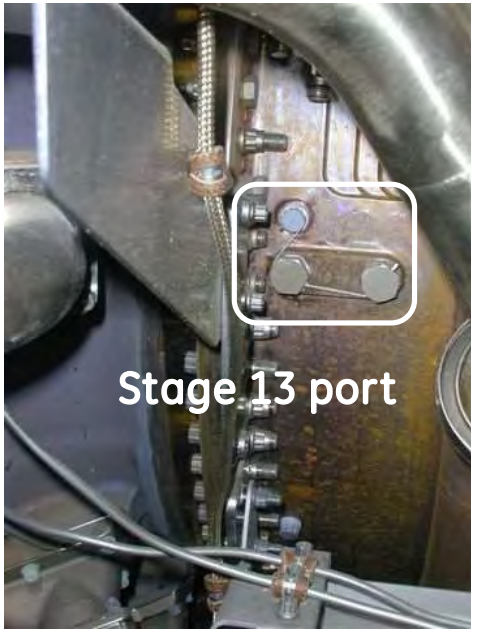

- ✓Borescope ports permit inspection of the entire gas turbine:
  - LPC
  - HPC
  - Combustor
  - HPT
  - LPT
  - Turbine Rear Frame
  - Oil system and fuel nozzles
- ✓Digital transfer to the factory and engineering allows for real time analysis
- ✓Borescope inspections are required every six months/4000HRs, or as directed by troubleshooting

© 2012 General Electric Company. Proprietary. All Rights Reserved.

Samples of LM6000 Borescope Inspections



LPC Blades



DLE Fuel nozzle



HPC S14 Blades

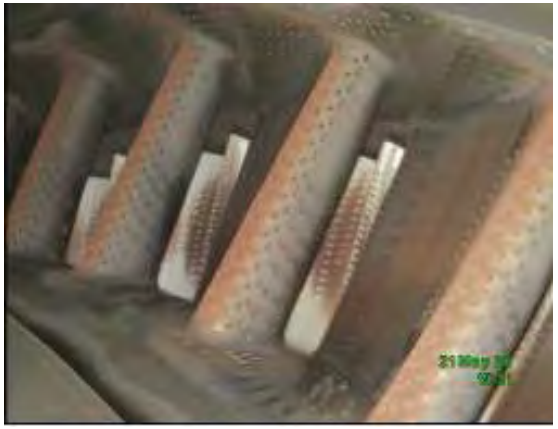

HPT S1 nozzle



HPT S1 blades

imagination at work

© 2012 General Electric Company. Proprietary. All Rights Reserved.

LM Maintenance - Hot Section Exchanges

- Hot-Section Exchanges
  - Repaired or New Parts Available
  - 2 to 3 Day Outage
- Customer Benefits
  - On-Site Service… No Shop Visit
  - Less Downtime… 1 Shutdown
  - Reduced Maintenance Costs
  - Firm Price… No Surprises
  - Fully Warranted Hardware
  - Immediate Availability in most cases
  - Light-Weight… easy to Handle & Transport
  - Includes required tooling, expendables and on-site labor



imagination at work

© 2012 General Electric Company. Proprietary. All Rights Reserved.

Hot Section Components

- Hot Section includes Rotable HPT Rotor, S1 and S2 Nozzles

Stage 2 nozzle assembly

HPT Rotor

Stage 1 nozzle assembly

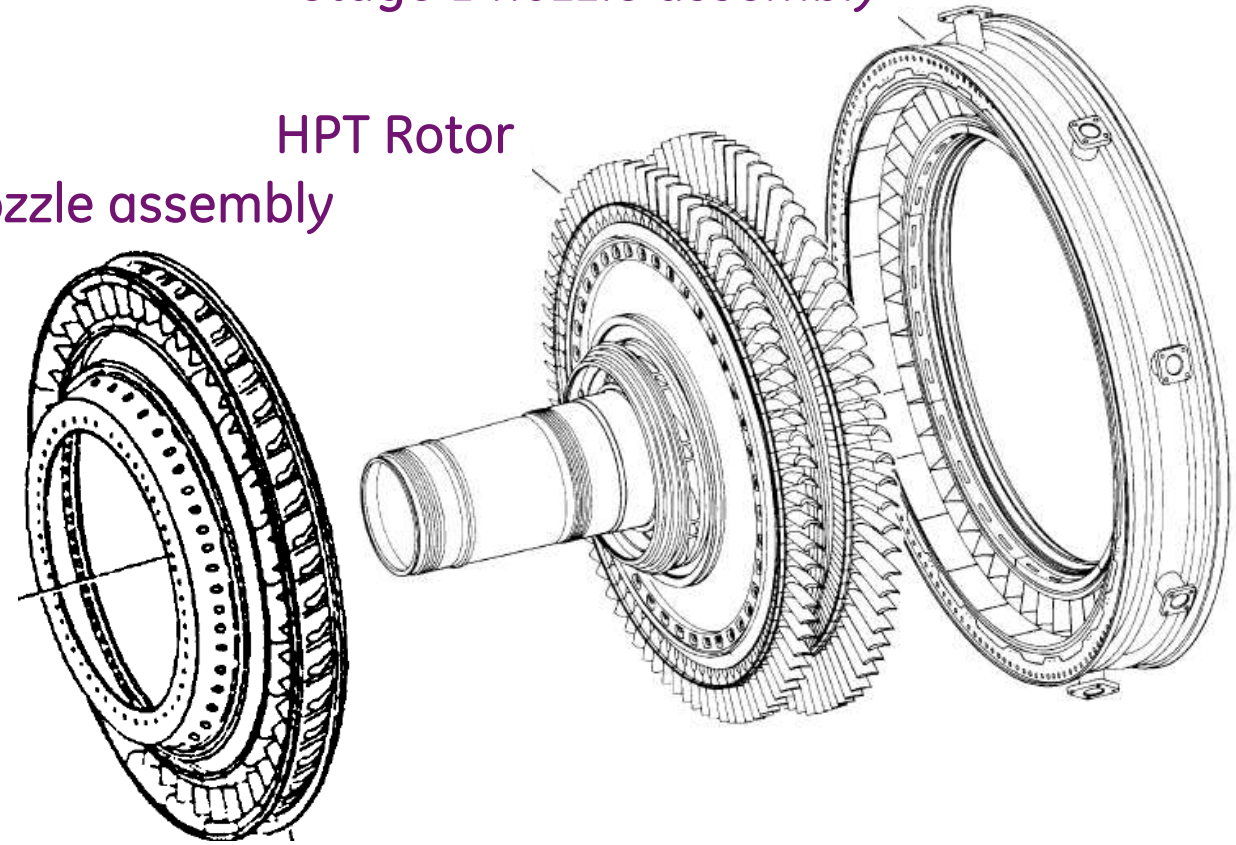

LM Maintenance Events – Major Overhaul

- Engine is Removed from Package
- Engine is Shipped to Service Center for Major Overhaul
  - 9 – 12 Weeks
- Major Overhaul Inspect & Repair
  - High Pressure Compressor
  - Combustor Assembly
  - High Pressure Turbine
  - Nozzle Assemblies
  - Low Pressure Turbine
  - Hydraulic System, Gearbox, VIGV's





© 2012 General Electric Company. Proprietary. All Rights Reserved.

LM6000 Engine Exchange

Minimized Downtime During Depot Visits

- 2 - 3 Day Outage with Spare or Lease Engines

Package designed for ease of engine removal





© 2012 General Electric Company. Proprietary. All Rights Reserved.

LM6000 Engine Exchange



Rotable Asset Program

Rotable Engine Maintenance Unit (EMU) - Benefits

- EMU Benefits:
  - Alternative to repairing removed hardware
  - On-site service (no shop visit)
  - No lease engine required
  - Reduced downtime (one shutdown)
  - Reduced maintenance costs
  - Pre-established price (no surprises)
  - Fully warranted hardware

Rotable Price includes:

- Tooling
- Shipping to US location or freight forwarder

12 Month Warranty

Hardware Available 90 Days After Receipt of Purchase Order (maximum)

Removed Assemblies Become GE Property

EMU Pricing Excludes:

- Consumables & Expendables
- Field service labor

Rotable Asset Program

On-Site Hot Section Exchange Program - Benefits

GE Provides Fully Warranted, 12 Months,Components On-Site

- Fully balanced and ground HPT rotor
- Nozzle Assemblies
- Consumable Hardware
- Labor (2 reps/shift))

GE Provides Technical Assistance For

- Engine disassembly
- Removal of hot section hardware from User's engine
- Installation of GE provided hardware

Typically can be completed in a single weekend

- Single shutdown - No shop visit required
- After engine removal, change-out only requires 16-20 hours (2 reps/shift)

Contractual Service Agreements (CSA)

Comprehensive Coverage

- Corrective maintenance & unscheduled engine caused repairs
- On-Site Technical Support
- Inspections / hot section / major overhaul
- Initial spares provisioning & tooling (Optional)
- Replacement spare parts
- Lease engine use (if member)
- Transportation costs

Firm Priced Repairs & Maintenance… No Surprises

Availability Guarantee (Optional)… GE Assumes Risks

Leveled Cost Distribution through Major Overhaul

Priced by Operating Hour, Monthly or Quarterly Fee

Lease engine program & Membership

Program Features Guaranteed Availability as Outlined in Contract

- Valuable to customers with one or more full time operating engines
- Lower weekly utilization fee
- Modest annual membership fee
- Contract periods are six years in duration
- Available at reduced rates to customers with spare engine(s)

Spare Parts Services

Distribution Centers at Cincinnati International Airport and in Houston

GE expects users to have "recommended spares" on-site to improve engine availability

Maintains An Inventory Of Spare Parts For Routine And Emergency Service

Customers Specify Method Of Shipment, Expediting available

Customer Web Center – Registration On-Line

Customized Recommendations

- Each customer /site may have special requirements for availability
- GE can work with customer to develop customized listing
- Identified as consumable and insurance parts
- Improve availability by reducing downtime for part delivery
- Avoids expedite fees

Orders are screened for configuration accuracy

Monitoring & Diagnostics

- 240 sites currently being monitored, including:
  - Power generation or mechanical drive
  - DLE and SAC combustors
  - Including very remote locations , cruise ships, pipelines and offshore platforms

Operating data acquired from control system via phone line

Valuable tool for:

- online troubleshooting with factory
- early warning of condition changes
- fault investigation
- site history & trending, etc.

Database and online viewing via the Internet

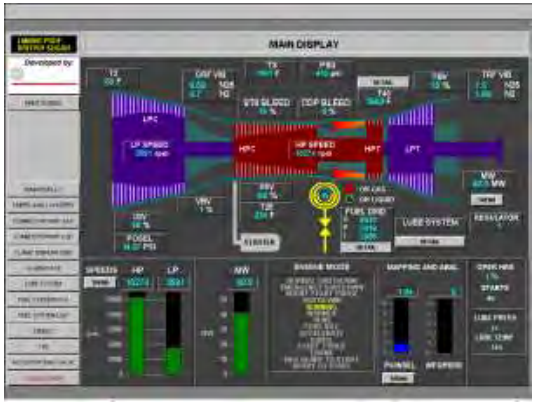

© 2012 General Electric Company. Proprietary. All Rights Reserved.

Customer Education



Customer Technical Education Center (CTEC)
Cincinnati, Ohio

*Classes held at customer site require additional charges for instructor T&L

- Modern Training Facility
- Specialized Tooling and Full Scale Engines
- Familiarization Courses can be held at Customer site*

Course	*Days*
Familiarization (No Cost to User)	2 ½ - 3
Borescope Inspection Techniques	3 ½ - 4
On-site Maintenance (Level 1)	4 ½ - 5
Hot Section Maintenance (Level 2)	4 ½ - 5
Cold Section Maintenance (Level 2)	4 ½ - 5
Course details provided in Services Catalog	

… Hands-On And Classroom Instruction in a "State-Of-The-Art" Training Facility

imagination at work

© 2012 General Electric Company. Proprietary. All Rights Reserved.

Keep the on-site maintenance to a minimum …

Minimum maintenance specialization needed

- let GE provide the expertise

When major tasks are needed …

- just get the gas turbine offsite …
- minimal additional manpower …
- minimizing the logistical challenge of delivering parts …
  - It's a lot easier to ship a complete spare engine than thousands of individual parts and tools
- outage times are minimized …
  - Gas turbines can easily be changed out in less than 48 hours (with good planning <24hours)

© 2012 General Electric Company. Proprietary. All Rights Reserved.

In summary …

- Aircraft heritage provides for high reliability, efficiency and power
- Modular design allows for quick change out … decreased downtime
- Prescribed service recommendations drive high availability
- Full GE Aero service capabilities provide fast response
- Customized contractual services minimize risk and maximize value

© 2012 General Electric Company. Proprietary. All Rights Reserved.

Operating & Maintenance Manual

Volume 1: Generator Installation and Commissioning



Generator Type: **BDAX62-170ER**
Project: **Trailer Mounted Turbogenerator**

Copyright Notice

© 2013-2014 Brush Electrical Machines Ltd. All rights reserved.

Document and Machine Numbers

Manual Number: TP0002020 **Issue:** B

Publication Date: March 2014

Machine Number(s): 923065.010, 923233.010, 923235.010, 923237.010, 923327.010, 923341.010, 923385.010, 923387.010, 923389.010, 923391.010, 923405.010, 923407.010, 923409.010, 923411.010, 923466.010, 923611.010, 923615.010, 923617.010

Document History

Date	Issue	Author	Comments
January 2014	A	BEM	Initial release
March 2014	B	BEM	Added and removed contracts

Statutory Language Notice

☑ ORIGINAL LANGUAGE INSTRUCTIONS

☐ TRANSLATION OF ORIGINAL LANGUAGE INSTRUCTIONS

Preface

Congratulations on your choice of precision engineered product from BRUSH, the world's leading independent manufacturer of turbogenerators, combining the resources of three major manufacturers of generators for gas turbine, steam turbine and hydro-turbine drive. With manufacturing plants in the UK, the Netherlands and the Czech Republic and with customers across all continents, BRUSH has a truly global presence.

Warnings, Notes and Instructions

The purpose of this manual is to provide information and advice on supplied equipment.

Symbols used in the manual are as follows:



General Notice

Instructions that must be followed



Ear Protection Notice

Instructions that must be followed



Important Notice

Important Instructions that must be followed



General Hazard

Caution to be exercised. Appropriate safety measures to be taken.



Electrical Hazard

Caution to be exercised. Appropriate safety measures to be taken.



Substance Hazard

Caution to be exercised. Appropriate safety measures to be taken.

Cross-document and website hyperlinks are underlined blue.

How to Use the Manual

Mandatory Notice

It is important that any persons responsible for equipment installation, commissioning, operation and maintenance are provided with access to this document, together with relevant/associated additional volumes and third-party information.

It is recommended that prior to undertaking any installation, commissioning, operation or maintenance activities on the equipment, this manual and any associated documentation should be read in its entirety in order to gain a better understanding of system operation.

This manual should be read in conjunction with contract specific, drawings and other first and third-party associated documentation.

All pages and topic headings are numbered for easy reference. Cross-reference(s) to associated paragraphs and documentation is included where appropriate. When referencing particular paragraphs in communications, it is important to specify the Manual Number and the Issue Reference.

The manual, and any amendments, should be maintained for the lifetime of the equipment.

Where this document is included as part of a specific contract, drawings are provided in a separate document volume. First and third-party equipment documents will also be provided as part of the overall contract documentation package.

Copies and Revisions

Additional copies of the latest available versions of manuals are available from BRUSH Aftermarket (See the back cover for contact details). A nominal charge *may* be made for this service.

Feedback

We are constantly seeking to improve the quality and reliability of our products, and we actively encourage user feedback.

Any comments should be addressed to your usual representative, or to BRUSH Aftermarket.

Service and Spares

Quotations for Service and Spares can be obtained from BRUSH Aftermarket at the contact address provided on this document's back cover.

Spare parts information, including prices and lead times, can be obtained from the following website address: http://www.brushparts.eu

BRUSH Aftermarket provides service support 24 hours a day, 7 days a week, supply first class replacement parts, carry out service inspections and maintenance programmes, upgrades and repairs, and comprehensive training programmes for both BRUSH and third-party generators and ancillary products. Further information on BRUSH Aftermarket can be found on our http://www.brush.eu.

Contents

1. General Information 7
1.1 Document Scope 7
1.2 Health and Safety Procedures 7
1.2.1 Delivery Checks 7
1.2.2 Handling 7
1.2.3 Storage 7
1.2.4 General Installation 7
1.2.5 Electrical Installation 8
1.2.6 Operation and Maintenance 8
1.2.7 Lifting Procedures 8
1.2.8 Control of Substances Hazardous to Health (COSHH 1999) 9
1.2.9 COSHH Data for Standard Components 9
1.2.10 Protection and Monitoring Devices 9
1.3 EU Directives 10
1.3.1 Declarations of Conformity 10
1.4 Installation and Commissioning Activities 10
2. Project Data 12
2.1 Application 12
2.2 Generator Description 12
2.3 Associated Control and Monitoring Equipment 12
2.4 Work Done By Others 12
2.5 Generator Design Data (See Rating Plate) 13
2.5.1 13.8kV 60Hz 13
2.5.2 11.5kV 50Hz 13
3. Generator Installation and Commissioning 14
3.1 Introduction 14
3.2 Safety 14
3.3 Pipework Systems 14
4. Lifting and Handling 15
4.1 Lifting 15
4.2 Handling During Storage or Erection 16
5. Pre-Installation 17
5.1 Identification 17
5.2 Damage in Transit 17
5.3 Heaters 17
5.4 Cleanliness 18
5.5 'Seet' Bags 18

5.6 Storage 19
6. Generator Unpacking and Mounting 21
6.1 Items Dismantled Prior to Despatch 21
6.2 Unpacking 21
6.3 Mounting onto a Baseplate 22
7. Rotor Protection and Transit Clamp Removal 23
8. Alignment 25
8.1 Bearing Alignment and Packaging Removal 25
8.1.1 Endframe Bearings 25
8.2 Levelling 25
8.3 Generator Alignment 26
8.4 Coupling Alignment 26
8.5 Axial Positioning 29
9. Final Assembly 30
9.1 Packing Case Roof 30
9.2 Protective Covering 30
9.3 Enclosure Assembly 30
9.4 Air Inlet Filter and Ductwork/Air Exhaust Ductwork 30
9.5 Re-Assembly of Components Dismantled Prior to Despatch 30
9.6 Assembly of Items Removed for Transit 30
9.7 Heaters 30
9.7.1 Location And Access 30
9.7.2 Connection 30
9.7.3 During Shutdown 31
9.7.4 High Voltage Testing 31
9.8 Shaft Earthing Brush 31
9.9 Frame Earthing 31
9.10 Electrical Connections 31
9.10.1 Electrical Clearances 31
9.10.2 Refitting Terminals Removed Prior To Despatch 31
9.10.3 Main Terminals 31
9.10.4 Neutral Terminals 32
9.11 Busbars 32
9.11.1 Bending of Busbars - Copper, Aluminium and *Cuponal* (90° bends) 32
9.11.2 Jointing 32
9.12 Canopy 33
9.12.1 Canopy Ventilation and Turbine Wall Sealing 33
9.13 Top Box Air Treatment Module 33
9.14 Sealing Stator Jacking Holes 34

9.15 Check List for Final Installation 34
10. Commissioning 35
10.1 Oil Systems 35
10.1.1 Oil System Flushing 35
10.1.2 Shaft Driven Oil Pump 35
10.1.3 Bearing Jacking Oil System 36
10.2 Static Tests 36
10.2.1 Heater Connections 36
10.2.2 Insulation Resistance 36
10.2.2.1 Stator Windings 36
10.2.2.2 Rotor Winding 37
10.2.3 High Voltage Testing of Windings on Site 37
10.2.3.1 DC HV Testing 37
10.2.3.2 Routine HV Testing 38
10.2.3.3 Stator DC Leakage Current HV Test 38
10.2.3.4 Rotor Winding Routine Testing 39
10.2.3.5 Exciter Components 39
10.2.4 Auxiliary Equipment 39
10.3 Bearing Insulation Test 39
11. Initial Start-Up 41
11.1 Lubricating Oil Systems 41
11.1.1 Oil System Check 41
11.1.2 Systems with Shaft Driven Oil Pumps 41
11.1.3 Systems with Motor Driven Pumps 41
11.1.4 All Oil Systems 41
11.2 Initial Start-Up Check List 41
11.3 Initial Running Test (Prior To Synchronising) 42
11.4 Pilot Exciter Magnetisation 42
11.5 Open Circuit Test 43
11.6 Short Circuit Test 43
11.7 Phase Sequence Matching 44
11.8 Protection 45
12. Reference Data 46
12.1 Installation Checklist 46
12.1.1 Mechanical 46
12.1.1.1 Rotor 46
12.1.1.2 Stator 47
12.1.1.3 Bearings 48
12.1.1.4 Lube Oil System 49
12.1.1.5 Interface to Prime Mover Plant 50
12.1.1.6 Cooler 50
12.1.1.7 Frame 51
12.1.1.8 Canopy 51
12.1.1.9 Foundations 51
12.1.1.10 Installation 52

12.1.1.11 Overhaul 52
12.1.2 Electrical 53
12.1.2.1 Machine Preliminary Checks 53
12.1.2.2 Machine Static Commissioning Checks 54
12.1.2.3 Neutral Cubicle Machine Static Commissioning Checks 54
12.1.2.4 Lineside Cubicle Static Commissioning Checks 55
12.1.2.5 Switchgear Commissioning Checks 56
12.1.2.6 Power Transformer Checks 57
12.1.2.7 System Interface Wiring 57
12.1.2.8 Generator Control and Protection Panel 58
12.1.2.9 Pre-Running Checks 59
12.1.2.10 Initial Running Tests 60
12.1.2.11 Open Circuit Commissioning Checks 60
12.1.2.12 Parallel Running Checks 61
12.1.2.13 Final Data at Handover 61
12.2 Protection Relay Function Tests 62

1. General Information

1.1 Document Scope

This document provides Installation and commissioning information for the project indicated DAX two-pole Turbogenerator and ancillary equipment.

For identification of main components and an explanation of model type, size and frame codes, refer to Appendix A.

1.2 Health and Safety Procedures

This information is supplied in accordance with Section 6 of the United Kingdom Health and Safety at Work Act 1974 with respect to the duties of manufacturers, designers and installers in providing health and safety information to Customers. The information advises of reasonably foreseeable risks involved with the safe installation, commissioning, operation, maintenance, dismantling, cleaning or repair of products supplied by Brush Electrical Machines Ltd.

Every precaution should be taken to minimise risk. When acted upon, the following precautions should considerably minimise the possibility of hazardous incidents.

1.2.1 Delivery Checks

Check for damage sustained during transport. Damage to packing cases must be investigated in the presence of an Insurance Surveyor.

1.2.2 Handling

Sling packing cases where indicated. Equipment not in a packing case, or removed from a packing case must only be lifted by the lifting points provided. Do not lift complete machines by lugs on heat exchangers or air silencers etc.

1.2.3 Storage

Unless the equipment has been designed for use outside, or specifically packed for outside storage, store all equipment inside a dry building, in line with BRUSH and third-party equipment manufacturer recommendations as/where applicable.

1.2.4 General Installation

Where installation is made by engineers other than Brush Electrical Machines Ltd. personnel, the equipment should be erected by suitably qualified personnel in accordance with relevant legislation, regulations and accepted rules of the industry. In particular, the recommendations contained in the regulations with regard to the earthing must be rigorously followed.

1.2.5 Electrical Installation

IMPROPER USE OF ELECTRICAL EQUIPMENT IS HAZARDOUS

It is important to be aware that control unit terminals and components may be live to line and supply voltages

Before working on a unit, switch off and isolate it and all other equipment within the confines of the same control cubicle. Check that all earth connections are sound.

WARNING

Suitable signs should be prominently displayed, particularly on switches and isolators, and the necessary precautions taken to ensure that power is not inadvertently switched on to the equipment whist work is in progress, or is not yet completed.

Adjustment and fault finding on live equipment must be by qualified and authorised personnel only, and should be in accordance with the following rules:

- Read the Instruction Manual.
- Use insulated meter probes.
- Use an insulated screwdriver for potentiometer adjustment where a knob is not provided.
- Wear non-conducting footwear.
- Do not attempt to modify wiring.
- Replace all protective covers, guards, etc. on completion.

1.2.6 Operation and Maintenance

Engineers responsible for operation and maintenance of equipment supplied under this contract should familiarise themselves with the information contained in this manual and with the recommendations given by manufacturers of associated equipment. They should be familiar also with the relevant regulations in force.

- It is essential that all covers are in place and that all guards and/or safety fences to protect any exposed surfaces and/or pits are fitted before the machine is started.
- All adjustments to the machine must be carried out whilst the machine is stationary and isolated from all electrical supplies. Replace all covers and/or safety fences before restarting the machine.
- When maintenance is being carried out, suitable WARNING signs should be prominently displayed and the necessary precautions taken to ensure power is not inadvertently switched on to the equipment whilst work is in progress, or is not yet complete.
- When power is restored to the equipment, personnel should not be allowed to work on auxiliary circuits, e.g. Heaters, temperature detectors, current transformers etc.

Ear Protection

Suitable ear protection must be worn where continuous operating noise levels exceed 70 dB. For actual generator /turbine sound pressure levels, refer to the appropriate contract documentation.

1.2.7 Lifting Procedures

Ensure that the recommendations given in the manual are adhered to at all times.

1.2.8 Control of Substances Hazardous to Health (COSHH 1999)

The data provided in Section 1.2.9 and Appendix A satisfies the responsibilities detailed in the COSHH Regulations 1999, and includes details of substances commonly used on standard components supplied by Brush Electrical Machines Ltd. This data is not contract specific, and therefore may include substances not used on equipment detailed herein. Contract specific information can be obtained from BRUSH Aftermarket at the contract address shown on the back cover.

1.2.9 COSHH Data for Standard Components



ALWAYS USE SUBSTANCES IN ACCORDANCE WITH MANUFACTURER'S INSTRUCTIONS

If after applying the suggested first aid procedures, symptoms persist, seek immediate advice from qualified medical staff. Never induce vomiting, or give anything by mouth to an unconscious person.

COSHH data for substances used in standard components supplied by Brush Electrical Machines Ltd. are summarised in Appendix A.

1.2.10 Protection and Monitoring Devices



WARNING

It is essential that any protection or monitoring device for use with generators or ancillary equipment should be connected and operational at all times unless specifically stated otherwise. It should not be assumed that all necessary protection and monitoring devices are supplied as part of Brush Electrical Machines Ltd. scope of supply.

Unless otherwise agreed, it is the responsibility of others to verify the correct operation of all protection and monitoring equipment, whether supplied by Brush Electrical Machines Ltd. or not. It is necessary to provide a secure environment that ensures operator safety and limits potential damage to the generator and ancillary equipment. If requested, Brush Electrical Machines Ltd. would be pleased to provide advice on any specific protection application issues or concerns.

1.3 EU Directives

The Machinery Directive is a European Community Directive dealing with safety of machinery. The purpose of the regulations is to ensure that machinery meets the relevant standards.

1.3.1 Declarations of Conformity

When installed in accordance with instructions defined in this manual, generator(s) will comply with the following EU directives:

- The appropriate standards of protection required by the European Community Machinery Directive 2006/42/EC.
- The appropriate standards of protection required by the European Community Low Voltage Directive 2006/95/EC.
- The appropriate standards of protection required by the European Community EMC Directive 2004/1 08/EC.
- The applicable requirements of IEC 60034.

Conformity certificates are included in the generator's quality dossier.

Certificates for associated first and third-party equipment are included in associated first and third-party manuals, where appropriate/available/required.

1.4 Installation and Commissioning Activities

During installation and commissioning activities it is important to remember that the generator must be kept clean and dry with suitable protection and by leaving the heaters on whenever it is safe to do so.

Reference should be made to operation and maintenance procedures contained in and relevant third-party supplier's datasheets, also supplied as part of contract specific documentation.

Drawings referenced in the following sections refer to those supplied in Volume 3. Reference should also be made to procedures contained in associated first and third-party equipment documentation.

Notice

Following major overhaul or an extended period of generator shutdown, prior to restarting consideration should be given to the use of temporary electric fan heaters (approximately 3kW type) if the frame heaters are not available. Combustion heaters (Paraffin, Kerosene and Calor Gas etc.) generate moisture and are not suitable.

Notice

When working on this equipment it is important that a safe environment is achieved i.e.

- **Isolate all electrical supplies, including anti-condensation heaters.**
- **Ensure adequate ventilation and lighting.**
- **Use proper support, lifting equipment and techniques for heavy items.**
- **Maintain access ways.**
- **Wear suitable protective clothing.**

Safety guards and covers must be fitted, unless the equipment has been made safe behind the guard or cover.

On-site safety procedures are to be followed as appropriate, in particular 'Permit To Work' type systems are be followed rigorously.

Attention should be given to the advice given in Section 1.2 (Health and Safety Procedures) and Section 1.2.8 (Control of Substances Hazardous to Health (COSHH 1999)). Details of substances used on equipment that are potentially hazardous to health are detailed in Section 1.2.9 (COSHH Data for Standard Components).

IMPROPER USE OF ELECTRICAL EQUIPMENT IS HAZARDOUS.

2. Project Data

2.1 Application

This manual is applicable to the following machine serial number(s):

923065.010, 923233.010, 923235.010, 923237.010, 923327.010, 923341.010, 923385.010, 923387.010, 923389.010, 923391.010, 923405.010, 923407.010, 923409.010, 923411.010, 923466.010, 923611.010, 923615.010, 923617.010

The relevant machine serial number(s) should always be quoted in any correspondence.

2.2 Generator Description

Brushless generator type BDAX62-170ER suitable for use with a GE type LM2500+ gas turbine drive.

Bearing and lubrication system:

- Non-Main Exciter End (NEE):
  - Endframe
  - Plain Sleeve
  - Elliptical
  - Force Lubricated
  - Insulated
  - Thrust Pad
  - Radial Jacking Supply Provision
- Main Exciter End (EE):
  - Endframe
  - Plain Sleeve
  - Elliptical
  - Force Lubricated
  - Insulated
  - Radial Jacking Supply Provision

The generator is complete with the following features:

- Pilot Exciter
- Air Treatment Module

2.3 Associated Control and Monitoring Equipment

- Rotor Earth Fault Monitor (REFM) - Infra Red type

2.4 Work Done By Others

- Oil supply system
- Canopy/enclosure

2.5 Generator Design Data (See Rating Plate)

2.5.1 13.8kV 60Hz

- Terminal Voltage: 13800Volts
- Frequency: 60Hz
- Speed: 3600rpm
- Power Factor: 0.9 lagging
- Standard: IEEE C50.13
- Coolant: Air at 15°C
- Output: 35556kVA (32000kW)

2.5.2 11.5kV 50Hz

- Terminal Voltage: 11500Volts
- Frequency: 50Hz
- Speed: 3000rpm
- Power Factor: 0.9 lagging
- Standard: IEC 60034-313
- Coolant: Air at 15°C
- Output: 29111kVA (26200kW)

3. Generator Installation and Commissioning

3.1 Introduction

This manual covers the installation and commissioning generator(s) as detailed herein.

Drawings referred to herein are contained in Volume 3.

General Notice

Reference should also be made to Installation and Commissioning procedures contained in third-party equipment information included with this document set.

Reference should also be made to Installation and Commissioning procedures contained in Third-party equipment information included with this document set.

3.2 Safety

General Hazard

When working on this equipment it is important that a safe environment is achieved i.e.

- **Isolate all electrical supplies including heaters.**
- **Ensure adequate ventilation and lighting.**
- **Use proper support for heavy items.**
- **Maintain access ways.**
- **Wear suitable protective clothing.**

Safety guards and covers must be fitted, unless the equipment has been made safe behind the guard or cover.

On-site safety procedures are to be followed as appropriate, in particular 'Permit To Work' type systems are be followed rigorously.

Attention should be given to the advice given in Section 1.2 and 1.2.8. Details of substances used on equipment that are potentially hazardous to health are detailed in Section 1.2.9 and the appropriate Supplier Data.

IMPROPER USE OF ELECTRICAL EQUIPMENT IS HAZARDOUS!

3.3 Pipework Systems

To prevent leaks, it is important to check the tightness of connections in pipework systems particularly following installation, maintenance and overhaul operations.

Care should be taken to follow manufacturers' instructions (See Appendix D) when assembling/re-assembling pipework compression fittings, noting that it is recommended that where used, *Walterscheid* and *Hoke* fittings are lubricated in order to achieve a positive assembly.

4. Lifting and Handling

4.1 Lifting

The Customer must provide adequate and safe lifting facilities, which may be jacking or cranage, before receiving and positioning the generator.

Weights and dimensions, and jacking instructions are given in contract drawings.



Figure 4-1 Correctly Lifted Packed Generator



Figure 4-2 Correctly Lifted Unpacked Generator*

*Showing correct use of the sling bracket.

WARNING!

Always support the generator with suitable packing whenever it is raised. Never rely on the lifting equipment alone.

Important

Always use the lifting trunnions or lifting holes on the stator when lifting the generator by crane—see Figure 4-2 and Figure 4-3.

When lifting an unpacked generator, use a spreader beam or loose spreader bars to avoid damaging the sides of the stator.

Care must be taken to ensure lifting slings do not damage any adjacent items (Pipework, covers, terminal boxes, RTDs etc.) located on the sides of the stator.

Store the spreader beam/spreader bars for future use.

WARNING!

A generator with a single pair of trunnions (one each side) will sometimes tilt towards the main exciter end when lifted by crane. The balancing sling is attached between the crane hook and a bracket, positioned in the top of the main exciter end endframe specifically for this purpose. Adjust the length of the sling as necessary to keep the generator level—see Figure 4-3, below.

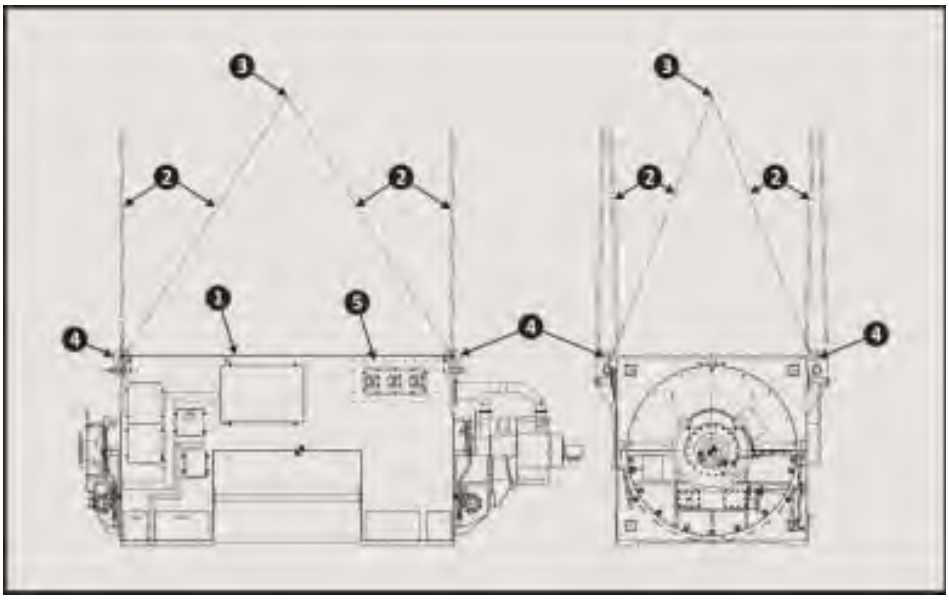

Figure 4-3 Typical Generator Lifting

1. Stator top blanking cover
2. Slings†
3. Single Lifting Point‡
4. Shackles†
5. Terminal Protection Cover(s)
6. Centre of Gravity

† Slings, spreader and shackles are not supplied by BRUSH
‡ For single point lifting, shackle ratings should be increased in line with appropriate load multiplier legislation.

WARNING!

When single point lifting (as Figure 4-3), where slings are not at 90° to shackles, higher rated shackles must be used—consistent with appropriate load multiplier calculations provided as part of statutory regulations.

4.2 Handling During Storage or Erection

Bedplate mounted machines should be lifted by means of their bedplate trunnions. Stator trunnions are designed to lift the stator only, unless otherwise stated on the general arrangement drawing.

Endframe machines can be lifted by means of the transverse transportation beams, when they are provided, or by the stator trunnions in conjunction with the main exciter end stabilising slings where appropriate.

Eyebolts or lugs fitted to other components are designed for lifting those components only.

5. Pre-Installation

5.1 Identification

Where more than one generator has been delivered, please ensure that packing cases have been correctly identified by machine serial number before unpacking components. Proper identification of components will ensure that items not required immediately remain fully protected until required for assembly. Components are tagged, or labelled, by serial number for easy identification, and assembly.

5.2 Damage in Transit

The generator must be inspected on arrival for signs of obvious damage. If there are signs of damage, the matter should be reported immediately to the Insurance Surveyor.

In the case of generators fitted with impact recorders, the recorder should be returned *to BRUSH* for future use. If damage is reported, the paper trace will be used as evidence to show at what point in time the generator received its roughest handling.



Figure 5-1 Shock Indicator

Where shock indicators (see Figure 5-1) are fitted to generators and/or packaging, each one should be inspected upon arrival for evidence of in-transit shock or impact above the indicator's rated value (typically 5g for lateral shock and 10g for vertical shock). The positions of shock indicators are shown on the relevant contract drawing. If a shock indicator has been triggered (i.e. a ball bearing dislodged), the machine should be fully inspected and any signs of damage reported immediately.

5.3 Heaters

Heaters are located in the generator and main exciter frames. The purpose of the heaters is to prevent moisture condensation on the windings and metal parts, which could lead to low insulation resistance or corrosion.

Upon arrival at site, the equipment must be protected from the effects of the weather, and should be transferred immediately to a designated clean, dry storage area (See Section 5.6). If the 'Seet' bag (See Section 5.5) has been removed or has been damaged, the heaters should be energised. Energising the heaters to prevent condensation is particularly important if the generator is subjected to significant or rapid changes in environmental temperature and/or humidity, (e.g. while moving from cold damp conditions outside to a warm dry building). Heaters can be connected to a suitable supply (See Volume 2) by using the terminals provided in the appropriate junction box, making reference to the diagram in the lid of the junction box as necessary.

Prior to energising the heaters, normal safety precautions should be adopted.

WARNING:

Before energising the heaters, ensure that there are no flammable materials in their vicinity.

In cases where a 'Seet' bag is fitted (See Section 5.5), the heaters are not to be connected until it has been removed.

During storage and erection, the heaters should remain energised whenever it is safe to do so.

5.4 Cleanliness

Particular care must be taken to maintain cleanliness in all parts of the machine during erection. The windings, bearings and rotating rectifiers are the most vulnerable parts, especially if a machine has to be erected after any of these parts have been exposed and contaminated.

Bearing surfaces must be protected and should not be left exposed for dirt or dust to collect on them. Bearings that have been exposed must be scrupulously cleaned to remove any surface contamination. Broken flange and coupling faces must be cleaned and any burrs removed to ensure that they mate correctly. Cloths used for cleaning should be `lint free'.

5.5 'Seet' Bags

'Seet' bags, where used, consist of a heavy duty plastic bag with a metal foil barrier. Once the 'Seet' bag has been sealed around the equipment, excess air is removed to leave an inert atmosphere. Desiccant is included within the ‘Seet’ bag to cater for minor leakage. It is important not to puncture the bag.



Figure 5-2 Generator Enclosed in ‘Seet’ Bag

To enable periodic moisture checks, the packing case has an aperture allowing a humidity indicator (see figure Figure 5-3, below), fitted to the 'Seet' bag, to be viewed. If moisture enters the 'Seet' bag, the humidity indicator will show an increased humidity level (coloured patches change state/colour according to the indicated relative humidity level). An investigation is required when the humidity level is above 40%. If moisture has entered the bag, the leak must be found and the bag dried and re-sealed.



Figure 5-3 Typical Humidity Indicator (design may vary)

- **a** Humidity level inside 'Seet' bag below 40%. No investigation required.
- **b** Humidity level inside 'Seet' bag at or above 40%. Investigation required.
- **c** Humidity level inside 'Seet' bag at or above 40%. Investigation required.

5.6 Storage

Upon arrival the generator must immediately be stored in a clean, dry place prior to installation, i.e. in a building, under a canopy or in a tented enclosure, particularly in countries where rainy conditions are likely.

If a storage building is not available, a clean, dry area can be achieved by covering the equipment with a tarpaulin, or similar, raised 'tent like' above it to prevent rain water forming pools (See diagram below). Internal inspections should be arranged following rain or snow and any water found either on top or in the base of the equipment should be dried out.

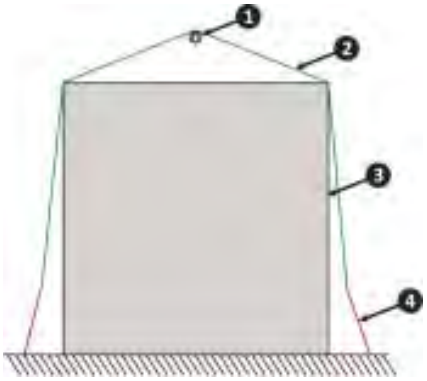

Figure 5-4 Temporary Tarpaulin Cover

1. Convenient support (e.g. wood or scaffold bar) extending beyond the generator
2. Tarpaulin sheet
3. Generator
4. Rope*

*Use weights as anchor points, or tie ropes to the generator's feet

General Notice

Tarpaulins draped on top of the equipment do not constitute satisfactory long term protection, however a tarpaulin lifted clear of the equipment (see the diagram above) with space for air to flow freely between it and the top of the equipment, can be classed as a 'tent like' enclosure, provided that pools of water are not allowed to form on top of the equipment. Any pools of water on the top of or inside the equipment should be removed immediately.

All openings, e.g. pipe flanges, enclosure seals, etc., are covered to protect against ingress of contaminants. The shaft and other bare metal parts are coated with an oil soluble rust inhibitor (e.g. *Shell 'Ensis TX'*). Bare surfaces inside the bearing are normally coated with heavy machine grade extreme pressure oil with rust inhibiting properties (e.g. '*Vactra 4*' which is soluble in oil). The external seals of the bearing are protected against water ingress with mastic impregnated tape.

Equipment stored for long periods should be inspected every 3 to 6 months to confirm that the 'Seet' bag seal (See Section 5.5) is secure (shown by blue Litmus paper in the indicator). If the 'Seet' bag is not secure, inspect for signs of dampness or corrosion, and if necessary steps should be taken to improve storage conditions, and advice should be sought from BRUSH Aftermarket (See the contact details on the back cover) regarding possible remedial action, and the suitability of equipment for service. Exposed machined parts have a protective coating of anti-rust preservative, which should not be taken off during storage, however fresh preservative can be applied, if necessary, after any rust or moisture has been carefully removed. For this purpose, existing preservative can be easily taken off with Paraffin or Kerosene.

During storage and installation, as well as during its working life, a generator should be protected from moisture, acid, alkali, oil, gas, dust, dirt and other injurious substances except, of course, in the case of generators specially designed to withstand such conditions. Periodic inspection will often reveal conditions, which are detrimental to the generator before lasting damage has occurred.

General Notice

Tarpaulins draped on top of the equipment do not constitute satisfactory long term protection, however a tarpaulin lifted clear of the equipment (see the diagram above) with space for air to flow freely between it and the top of the equipment, can be classed as a 'tent like' enclosure, provided that pools of water are not allowed to form on top of the equipment. Any pools of water on the top of or inside the equipment should be removed immediately.

Notice

Pools of water should ALWAYS be mopped out of, or off the generator as soon as reasonably possible after rain etc.

Units that have been transported in a dismantled state require special protection against water and other contamination's until they are assembled within the protection of their enclosure.

Protection must be immediately available for any exposed part during erection outdoors in the event of sudden changes in weather conditions only.

Care must be exercised in handling to avoid damaging any part of the generator. Under no circumstances should the generator be lifted without providing sling protection.

6. Generator Unpacking and Mounting

6.1 Items Dismantled Prior to Despatch

To prevent damage during shipping or to meet transport limitations en-route, various items may have been dismantled prior to despatch. The contract-shipping list will provide a complete list of these items and their location within the packages. Re-assembly drawings are provided in contract specific drawings where appropriate.

6.2 Unpacking

WARNING:

Unpacking should only be completed in dry conditions, and particular care should be taken to ensure that exposed parts of the generator are not contaminated or damaged. The following operations should only be completed immediately prior to mounting the generator onto its base.

Remove any tarpaulin covers. Where the generator has been shipped in a packing case, remove the top, side and end wall assembly by removing the bolts located around the bottom of the packing case, and lift and remove this assembly clear of the generator and packing case base.



Figure 6-1 Packing Case Removal

Remove the 'Seet' bag (See Section 5.5). Lift the generator clear of the transport beams, and packing case floor where applicable, by first removing the transport beam securing bolts.



Figure 6-2 Typical Transport Beams

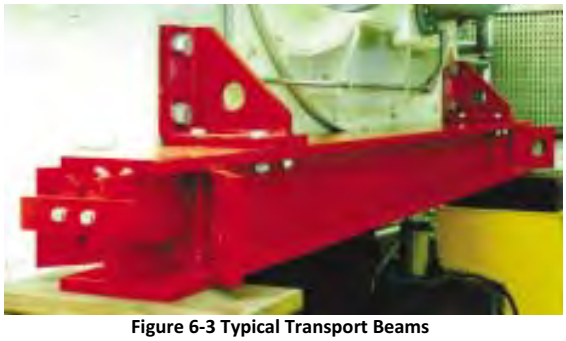

Figure 6-3 Typical Transport Beams

6.3 Mounting onto a Baseplate

The generator is provided with machined feet for mounting onto a baseplate.

Lower the generator onto the baseplate using the lifting/jacking facility.

Levelling to the required tolerance values is achieved by the use of shims.

7. Rotor Protection and Transit Clamp Removal

Where an external shaft clamp to prevent movement during transportation has been used, the generator has been despatched in a 'ready to run' condition so that the bearings do not need dismantling or inspecting at site.

For some applications, it is impractical to fit an external shaft clamp and it is necessary therefore to fit anti-movement devices within the bearing. Removal of these anti-movement devices requires the dismantling of the bearing and, for these applications, the shaft and bare metal parts are coated with an oil soluble rust inhibitor (e.g. *Shell 'Ensis TX'*). Clear instructions are attached to the outside of the bearing housing when internal packing is used.

Where fitted, remove the rotor clamp that has been bolted to the non-main exciter end bearing housing to prevent shaft movement and damage to the bearings.

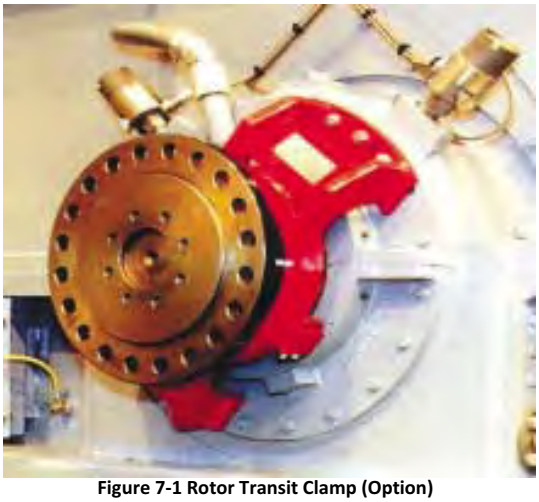

Figure 7-1 Rotor Transit Clamp (Option)



Figure 7-2 Rotor Transit Clamp (Option)

Ensure that any components that were removed in order to fit the transit clamp are now re-fitted. These items have been specially marked prior to packing.

The journals and thrust faces within the bearings have been coated with '*Vactra 4'*, a heavy oil designed for lubrication and protection. This oil will protect the bright metal from corrosion, and may also provide sufficient lubrication to allow the shaft to be turned as required whilst aligning the generator to the turbine. However, if difficulty is experienced turning the generator rotor, the oil system should be commissioned or additional *'Vactra 4'* should be injected into the bearing via the hydro-static (jacking) oil pipework.

The coupling and brush tracks will be protected with *Shell 'Ensis' TX*, an oil soluble preservative. *The Shell 'Ensis' TX* will need to be washed off with oil just prior to the component being used.

The external gap between the shaft seals and the shaft is sealed with '*Denso'* tape. This tape is only used on external seals that can be accessed without dismantling the machine. The tape must be removed prior to any attempt to turn the shaft. To aid removal of '*Denso'* tape, use a rag soaked in Paraffin or Kerosene.

Remove the silica gel that has been put in the bearing drain (attached to the blanking flange) for the purpose of removing moisture during transit and storage.

The rotor is now free to rotate for alignment purposes and when the bearings are coupled to the oil supply they are ready for service.

Reassemble the earthing brush as shown on earthing brushgear assembly drawing.

Notice

When further transportation is required ensure that the rotor clamp (used to prevent movement of the bearings during transit) is re-assembled in accordance with the rotor clamp assembly drawing.

When removing the rotor clamp from the non-main exciter end of the generator, check that the factory set seal clearances have been maintained in accordance with the bearing seal setting drawing.

All openings, e.g. pipe flanges, enclosure seals, etc., are covered to protect against ingress of contaminants. The shaft and other bare metal parts are coated with an oil soluble rust inhibitor (e.g. *Shell 'Ensis TX'*). Bare machine surfaces inside the bearing are normally coated with heavy machine grade extreme pressure oil with rust inhibiting properties (e.g. *'Vactra 4'*). The external seals of the bearing are protected against water ingress with mastic impregnated tape.

Notice

Bearings that are despatched ready to run are certified leak free during factory testing. They should not be opened up on site without good reason.

8. Alignment

8.1 Bearing Alignment and Packaging Removal

8.1.1 Endframe Bearings

On machines that have been despatched to site with an external shaft clamp (See Section 7), it is not necessary to check or re-align the bearing bushes or seals. This work was completed as part of the packing procedure. The bearing should not be dismantled, unless there is a compelling reason to do so, as all joints have been carefully sealed in the factory and the bearing has been prepared 'ready to run'.

The shaft is locked with an external clamp to prevent movement during shipping. The clamp should be removed when the unit has been located on the foundation and before alignment of the turbine.

On these machines, unprotected surfaces within the bearing housing are coated with heavy, machine grade extreme pressure oil with rust inhibiting properties. This prevents corrosion and also provides sufficient lubrication to permit minor movement and rotation of the shaft for alignment. In addition, a small quantity of desiccant is attached to the inside of the bearing drain blanking cover.

Adhesive tape is also applied between the shaft and the external bearing oil seals to prevent the entrance of moisture at this joint. Please note that adhesive tape is not applied on internal oil seals because of the difficulty of removal and also the chances of water entry being much less.

The adhesive tape should be removed prior to turning or moving the shaft and the desiccant should be removed prior to piping-up the bearing drain.

Normally, factory assembled couplings do not require dismantling during erection on site. The couplings are supplied pre-aligned with bolts correctly torqued and locked. If it becomes necessary to dismantle or separate a coupling on site, first ensure an adequate supply of suitable bolts, nuts, locking features etc. are purchased to prevent delay during re-assembly.

8.2 Levelling

General Notice

See levelling information provided in the Contract Quality Dossier.

1. Take a set of vertical alignment readings and check the transverse slopes at the points indicated on relevant QC Sheet, which is a record of the measurements made in the works. Positions for taking transverse slopes are marked on the machine.
2. If possible the site foundation pads should be levelled and adjusted to an accuracy of ±0.13mm, prior to arrival of the unit, using an alignment telescope. On arrival on site, the unit should be lowered onto the foundation with nominal shim packs of equal thickness at all pad locations to permit future adjustment.
3. Calculate the shim changes necessary at each of the footpads in order to achieve the works alignment readings.
4. Jack up each side of the machine in turn and make shim changes. Check that each foundation point is unstressed (it should not be possible to move the shims under each foot) before tightening the holding down bolts.

5. Tighten foundation bolts and re-check alignment readings when the works alignment figures are achieved with the foundation bolts tightened, the machine should be in the undeflected untwisted state as on works test.
6. Note: Difference in transverse slope readings at ends A and B indicates twist and this difference should be within 0.00005 of the works difference. Installation engineers are requested to report to the works any discrepancies found during the installation procedure along with the details of the corrective action taken. Large discrepancies should be reported and approval obtained from the works before corrective action is taken, since large discrepancies may indicate distortion or damage in transit.

8.3 Generator Alignment

On the assumption that the turbine is positioned first, the procedure is as follows:

1. Raise the generator slightly using the lifting/jacking facility. Lower the generator on to the adjustable packs (shim sets) that are placed on the soleplates. The packing must correct any difference in the height of the soleplates and result in the generator being nominally level.
2. Jack the generator in order to position the coupling datum into the required location to match the turbine. For coupling alignment instructions see Section 8.4. Check that each foundation point is unstressed (it should not be possible to move the shims under each foot) before tightening the holding down bolt associated with that foot. When the generator is finally aligned, tighten the foundation bolts to the pre-load figure as advised in the drawings.
3. Re-check the alignment readings. The generator should be in the undeflected, untwisted state as on the works test. Refer to the works alignment readings as recorded in the Contract Quality Dossier.
4. Tighten the foundation bolts to the recommended load settings as indicated on the foundation details.
5. When all alignment procedures have been completed, lock-up the axial and transverse keys against the foundation blocks as shown on the generator foundation hardware drawings.

8.4 Coupling Alignment

Normally, factory assembled couplings do not require dismantling during erection on site. The couplings are supplied pre-aligned with bolts correctly torqued and locked. If it becomes necessary to dismantle or separate a coupling on site, first ensure an adequate supply of suitable bolts, nuts, locking features etc. are purchased to prevent delay during re-assembly.

The procedure detailed hereafter, describes the alignment of the generator or generator package to the turbine, and assumes that the turbine has been installed first.

The alignment procedure is intended to achieve the specified alignment to the turbine in respect of vertical, horizontal and angular requirements at the generator coupling face, whilst maintaining the undistorted state achieved in the levelling procedure already carried out.

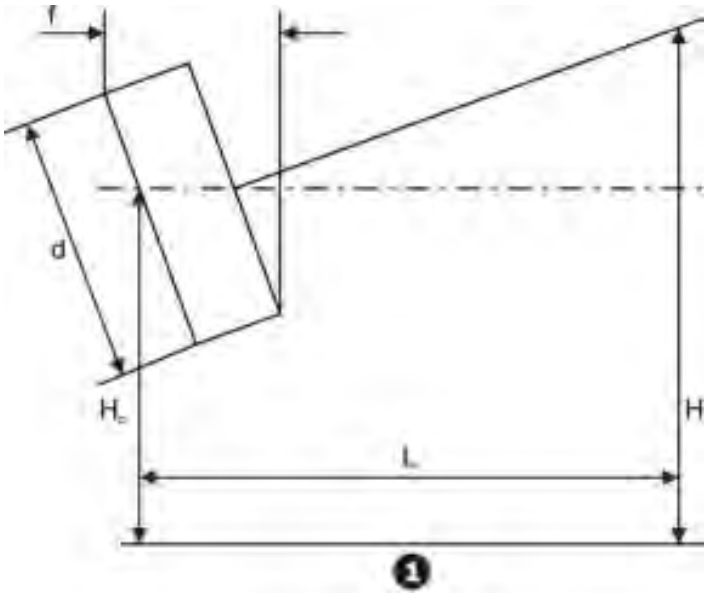

Figure 8-1 Alignment Procedure Measurements Diagram

1 Foot Pad

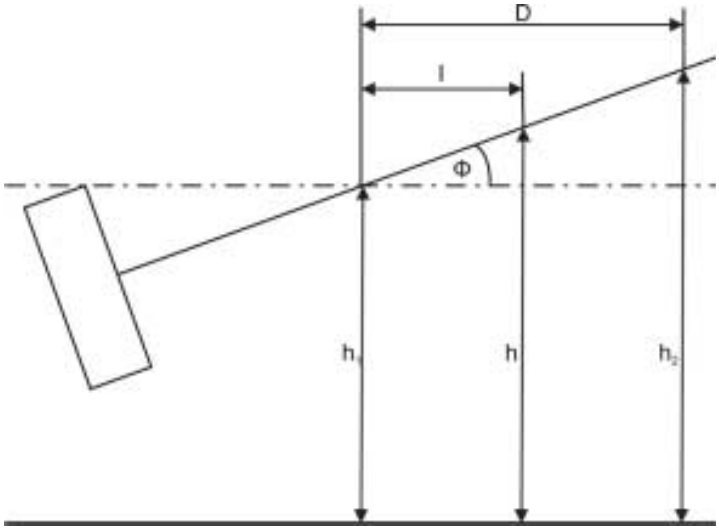

Figure 8-2 Alignment Readings Diagram (Difference between Site and Works)

When aligning to the turbine the generator must lie on the required catenary that will imply that the main exciter end of the machine will be high with respect to the non-main exciter end. Therefore, alignment readings will not be the same as in the works, but will reflect the change of slope. The procedure is as follows:

1. Check the alignment between the turbine coupling flange and the generator coupling, both radial and face readings and determine the horizontal movement and lift required at the coupling and the angular rotation in the horizontal and vertical planes, in order to achieve the specified figures.
2. Calculate the shim changes necessary at each end of the footpads on the basis of a vertical lift plus a rigid body rotation of the generator, thus maintaining the undistorted state of the generator (See Figure 8-1), using the formula:

$$H = H_C + \left(\frac{fL}{d}\right)$$

Where:

H =	Correction to foot pad
H_c =	Vertical correction required at the coupling
L =	Distance from coupling face
f =	Face correction required at the coupling
d =	Diameter at face correction

3. Install the required shims under all footpads.
4. Any change in lateral positioning of the generator can be achieved by jacking (See General Arrangement drawing).
5. Take a new set of alignment readings and transverse slope readings, and record them on the QC sheet.
6. Check that the generator, although at a different slope, conforms to the undistorted conditions indicated by the works QC readings using the formula:

$$\phi = \frac{(h_2 - h_1)}{D}$$

Where:

Φ =	Change of generator slope
h_2 =	Difference between site and works readings at alignment point nearest main exciter end bearing
h_1 =	Difference between site and works readings at the non-main exciter end alignment point
D =	Distance between alignment points h_1 and h_2

7. The difference between works and site readings at other alignment points (if any) should be $h = h_1 + \phi l$ (Where l = distance from that alignment point to non-main exciter end alignment point).
8. The accuracy of vertical alignment at any point should be within ± 0.13mm with the foundation bolts tightened.

Notice

Installation engineers are requested to report to the works any discrepancies found during the installation procedure along with details of the corrective action taken. Large discrepancies should be reported and approval obtained from the works before corrective action is taken, as large discrepancies may indicate distortion or damage in transit.

8.5 Axial Positioning

The generator is provided with a thrust bearing to provide relative axial location between the stator and rotor. The General Arrangement drawing specifies the bearing's capability to carry an external axial load. The thrust bearing is usually located on the main bearing at the opposite end to the main exciter. Lubricating oil is provided by through a common feed with the main journal bearing. To position the generator correctly (when cold), the rotor should be set butted against the inboard side of the thrust bearing i.e. with the rotor coupling face fully extended towards the prime mover.

9. Final Assembly

Notice

The following procedures must not take place until all alignment procedures (Section 8) have been completed.

9.1 Packing Case Roof

Remove the packing case roof taking care not to damage cork gaskets that may be fitted under the protective covering for transit purposes. Check the gaskets have not been damaged before using. Leave the transit seal on top of the stator in position to give protection from the atmosphere.

9.2 Protective Covering

Remove the protective covering taking care not to damage cork gaskets that may be fitted under the protective covering for transit purposes. Check the gaskets have not been damaged before using.

9.3 Enclosure Assembly

Where applicable, assemble the free-standing enclosure according to the drawings.

9.4 Air Inlet Filter and Ductwork/Air Exhaust Ductwork

Where applicable, fit the air inlet filter and ductwork, and exhaust ductwork.

9.5 Re-Assembly of Components Dismantled Prior to Despatch

The items dismantled and packed separately from the generator (see Section 6.1) should now be re-assembled. Further information on the above items is provided in the drawings.

9.6 Assembly of Items Removed for Transit

Any remaining items packed separately from the generator should now be assembled.

9.7 Heaters

9.7.1 Location And Access

The generator heaters are mounted at the ends of the stator. The position of the access plate for these heaters is shown on the General Arrangement drawing.

Heaters for the main exciter are mounted between poles at the bottom of the main exciter and are accessible by removing the main exciter endframe.

9.7.2 Connection

See the connection diagram.

The purpose of the heaters is to prevent condensation of moisture on the windings and metal which could lead to low insulation resistance or corrosion. As soon as possible after the set arrives at the site, the heaters should be connected to a suitable supply by means of the terminals provided in one of the junction boxes (see diagram in lid of box). Details of the supply required for the heaters are given in the drawings and Volume 2.



WARNING:

It is the responsibility of the person energising the heaters for the first time to ensure that they are not covered with temporary packing etc. (thus presenting a fire hazard). He must also ensure that leads temporarily disconnected at shipping breaks are made safe before energising the heaters. During storage and erection, the heaters should remain energised whenever it is safe to do so.

9.7.3 During Shutdown

The heaters should always be energised when the machine is not in service.

9.7.4 High Voltage Testing

Elements are high voltage tested to earth at the makers' works at 2000V ac when cold and after assembly in our equipment at 1500V ac when cold.

9.8 Shaft Earthing Brush

This is adjacent to the non-main exciter end bearing. The protective coating applied in the works should be removed from its track on the shaft, by means of a clean rag saturated with paraffin or white spirit. Ensure brush is free in its holder by lifting bush approximately 1mm and releasing, it should jump smoothly back down to the rotor.

9.9 Frame Earthing

The frame must be connected to the station earth via the earth terminal provided. The joint faces should be lightly smeared with good quality high temperature contact grease (See Section 9.11.2).

9.10 Electrical Connections

9.10.1 Electrical Clearances

Where there is adequate electrical clearance between phases and to earth, the bolted connections may be left uninsulated, but where there is inadequate electrical clearance, the joints must be insulated.

Joints are insulated by smoothing the contours with insulating putty and then taping the joint using 7 layers of B8 tape and one layer of F1 tape from PS 2868. Alternatively, use one of the better grades of self-amalgamating tapes suitable for high voltage cable joints.

9.10.2 Refitting Terminals Removed Prior To Despatch

When the generator has been despatched to site with the terminals removed to prevent damage, ensure that the terminal contact faces are clean, free from dust and grit before connecting the terminals.

Lightly smear the joint faces with good quality, high temperature contact grease (See Section 9.11.2).

Re-fit the terminals, complying with the requirements of the drawings and Section 9.10.1 (Electrical Clearances) using adequate bolt tension (See drawings and Volume 2 - Torque Wrench Settings for Metric Screws).

9.10.3 Main Terminals

Make connections in accordance with the diagram of connections for the installation. The generator phase sequence is shown on the General Arrangement drawing and on a plate attached to the generator.

WARNING:
The direction of rotation of the generator may not necessarily be the same as the alphabetical sequence of the terminal markings.

The main terminals are silver plated. Ensure that the terminal contact faces are clean, free from dust and grit before connecting the terminals to the line cubicle. Lightly smear the joint faces with good quality, high temperature contact grease (See Section 9.11.2). Re-fit the terminals using adequate bolt tension.

Terminal joints must be made with 'Belleville' spring washers. These will ensure a greater contact pressure and reduce contact resistance. Fit the washers with the dome facing the nut or bolt, and the rim towards the copper.

9.10.4 Neutral Terminals

Connect the neutral terminals (See drawings).

9.11 Busbars

Unless specified otherwise on the working drawings, the following instructions should be followed:

9.11.1 Bending of Busbars - Copper, Aluminium and *Cuponal* (90° bends)

The minimum inside bending radius of the bar is twice the thickness of the material. The material is not to be damaged either by the tool on the inside or by cracking on the outside of the bend. Dressing of the bend to remove the evidence of such is not permitted. To avoid cracking, it may be necessary to anneal hard copper prior to bending. The copper should be heated to no more than a dull red heat and then quenched in water.

For bending 90° - 120° the inside radius should be 3 x thickness.

For bending over 120° the inside radius should be 4 x thickness.

9.11.2 Jointing

To facilitate good joints, use '*Unial*' high temperature contact grease as directed.

Unial is compatible with Aluminium, Copper, Steel, Zinc, Cadmium, Tin or Silver or any combination of these metals.

Substance Hazard
***Unial* compound, because of its chromate content has a very slight toxicity. Handled carefully it has no harmful effects on the skin. It should not, however be allowed to enter open cuts or sores. It may easily be removed from the skin with a rag moistened in paraffin or white spirit. The protection given by barrier creams on hands is desirable.**

Bolted joints; Aluminium to Aluminium, Copper to Copper, *Cuponal* to *Cuponal*, Aluminium to Copper, *Cuponal* or Copper to Silver or Tin Plated Copper, should be prepared as follows:

1. Ensure surfaces are flat and free from burrs at the edges and holes.
2. Wire brush each surface until an even matt finish is obtained. Omit this operation for plated bars. (After drilling plated bars it is not necessary to re-plate the holes provided the *Unial* covers the side of the holes).
3. Coat contact faces with a light, even application of *Unial* Compound immediately after brushing. The whole surface, including the sides of holes, should be covered.
4. Close the joint and evenly tighten bolts to the recommended torque.

5. When joining Aluminium to copper or *Cuponal*, the Aluminium busbar should be above the copper whenever possible.

WARNING:

For re-fitting and insulating terminals etc. which have been removed from the generator for transport purposes (see Section 6.1) note the following:

- **Ensure that a film of '*Unial*' is retained at the edges of Aluminium to copper or *Cuponal* joints to prevent bi-metallic action.**
- **Under no circumstances brush Aluminium with a brush previously used on copper or copper alloy.**

9.12 Canopy

9.12.1 Canopy Ventilation and Turbine Wall Sealing

General Notice

When fitted and prior to starting, ensure that the canopy ventilation fans and turbine wall sealing air systems are running. These systems often divide the units into various safety zones and it is essential that the integrity of these zones be maintained.

9.13 Top Box Air Treatment Module

All packing case, packing materials and protective covers are to be removed prior to assembly of these items.

It is recommended that the top box air treatment module is fitted after:

6. The stator has been aligned.
7. The canopy walls have been assembled.
8. The packing roof, with in-built sling spreader, has been removed.
9. The transit seal on top of the stator has been removed.

Notice

All ventilation paths should be checked to ensure that they are clear of packing materials.

To assembly the air treatment module (using fixings supplied):

1. Taking care not to damage the stator seal, mount the module's outlet sections (stencil marked **VO-1** & **VO-2**) to the stator, noting the orientation of the sections (i.e. the exciter end is stencil marked **VI-1X**, the drive end is marked **VI-1**).

Notice

To avoid distortion, air treatment module sections must only be lifted using lifting lugs provided.

Care must be taken when handling air module sections as they are top-heavy.

2. Attach walkway and ladder assemblies, where supplied.
3. Taking care not to damage seals and/or foam sealing strips, attach the inlet sections—ensure correct orientation by matching stencil markings:
   VI-2 to **VI-1**, and **VI-2X** to **VI-1X**.

4. Attach the two handed sets of tie bars—using the supplied hex head screws and Philidas locknuts.
5. Insert Amerkleen filters.
6. Make electrical connections to pressure switches/transmitters and earth bonding studs, where supplied.

9.14 Sealing Stator Jacking Holes

Notice

Holes in stator feet used for jacking during alignment must be sealed. If grout is not placed around the generator stator feet, oil resistant mastic compound must be applied to the bottom of each of the jacking holes following completion of generator alignment.

9.15 Check List for Final Installation

The attached list (Section 12.1) is the recommended routine procedure for final installation of Brush Electrical Machines Ltd. machines. The operations should be 'signed off' and dated by the commissioning engineer as the scheduled work progresses.

10. Commissioning

10.1 Oil Systems

10.1.1 Oil System Flushing

1. The complete generator oil system has been factory cleaned to a degree which meets the standard specified in the following table:

Table 10-1 Acceptable Particle Count Per 100ml Oil Sample

Range Of Particle Sizes (μm)	Number Of Particles	Equivalent NAS1638 Code
2 - 5	5,120,000	12
5 - 15	1,024,000	12
15 - 25	182,400	12
25 - 50	506	6
50 - 100	45	5
>100	0	0

2. Prior to making the final connection to the generator, site interfacing pipework should be flushed with oil (preferably hot) until the cleanliness meets the standard detailed in the above table.
3. When oil system items are shipped separately, e.g. lube oil or jacking oil modules and pipework etc., care must be taken to ensure the cleanliness of the system is maintained during the installation process. On completion of site assembly oil system cleanliness must be assured, and if necessary the oil system must be flushed with the bearings bypassed until oil system cleanliness meets the standard detailed above.
4. Where a lubricating oil system is supplied, fill the oil tank to the `Normal' level prior to energising the lubricating oil pumps or heaters. Details of approved lubricating oils are given in Volume 2. It is the operator's responsibility to ensure that the oil purchased meets the relevant specification and that any oil batches that are mixed are mutually compatible.
5. During the initial oil fill it is advisable to check the operation of any oil tank level indicators.
6. Prior to starting the generator, check that the main oil pump and standby/backup pump(s) sequencing operates correctly.
7. Pressure and temperature operated devices are factory calibrated and set so that they should not require adjustment. Check, however, for satisfactory operation.

For details of the lubricating oil system, please consult the general arrangement and lubricating oil schematic drawings. Refer also to the comments given in Volume 2.

10.1.2 Shaft Driven Oil Pump

The generator is provided with a shaft driven oil pump fitted to the main exciter end, as illustrated on the General Arrangement drawing.

Further information on pump installation and commissioning is given in the following Third-party equipment information included with this document set.

10.1.3 Bearing Jacking Oil System

Bearing jacking oil is required during periods of prolonged running of the generator at low speeds (typically below 20 rpm) and maintenance operations in order to minimise generator bearing wear, and where required to reduce the shaft system breakaway torque.

Before initial running of the machine, ensure that the system achieves a good lift. The minimum lift required is 0.025mm.

10.2 Static Tests

Tests are to be completed in accordance with the requirements of the Contract and scope of work, and in line with the following:

10.2.1 Heater Connections

Make sure that anti-condensation heaters are connected to a supply of the specified voltage in such a way that they are always switched on when the generator is standing idle.

10.2.2 Insulation Resistance

If the instruction in Section 5.3 regarding the connection of heaters has been carried out, there should be no problem due to low insulation resistance. However, the insulation resistance of the windings should be checked before the machine is started as follows:

10.2.2.1 Stator Windings

1. Neutral earthing arrangements should be disconnected and a 5000V *Megger* should be applied to the complete winding for 1 minute.
2. The insulation resistance depends on the winding temperature and should not be less than the following values:

Table 10-2 Insulation Resistance/Winding Temperature Relationship

Winding Temperature (°C)	0	10	20	30	40	50
Insulation resistance (MΩ)	128	64	32	16	8	4

3. If the reading is less than this value, first check that there is no moisture or dirt on the terminal insulators, check whether any other equipment such as lightning arrestors, voltage transformers etc, is connected to the stator terminals as this could affect the readings. If none of these is the cause, the stator winding should be dried out by one of the following methods:
   a. Circulate hot dry air through the machine e.g. by means of fan heaters.
   b. Short circuit the stator terminals through a suitable ammeter, drive the generator at its normal speed and switch the excitation to hand control. Adjust the motorised hand control regulator to give 100% to 110% of full load current in the short-circuited stator.



Electrical Hazard

Even though the line terminals are shorted, an appreciable voltage may exist between the line and neutral terminals; the usual precautions must be taken to prevent accidental contact with live parts.

Notice

A check should be kept of the stator winding temperature, by means of the embedded temperature detectors provided, and these readings should not be allowed to exceed 110ºC.

10.2.2.2 Rotor Winding

1. The rotor winding should be *Meggered* at 500V by applying the test voltage between earth and one of the main field connections. Temporarily short diodes or diode bridge with a piece of fuse wire during this test. Where a rotor earth fault monitor is provided, it must be disconnected.
2. Rotor winding insulation resistance will normally be at least 2MΩ if the machine is thoroughly dry. However, if it has been allowed to become damp almost any low reading may be obtained. Provided this is not less than about 10kΩ, the best way to dry the rotor out is to run the machine on load.
3. Running with the stator windings short-circuited, as for stator drying is an alternative method that may be used if desired. Several days of running may be required before the insulation resistance of a damp rotor gets up to 2MΩ.
4. **Note**: If closed air circuit machines have to be dried out, a temporary air bleed system may be arranged to prevent re-circulation of moisture. Care should be taken not to introduce moisture or dust via the air bleed system. On water cooled machines, water will either condense out on the cooler fins to be removed by the drip tray and the leak detector, or it will be dissipated over a period of time (by the air being bled to seal the bearing shaft seals.)

10.2.3 High Voltage Testing of Windings on Site

High voltage testing is carried out in the works on all machines after running test in accordance with British, American or IEC Standards as specified.

Each of these Standards contain a recommendation that this test should not be repeated but allows reduced voltage tests to be carried out by agreement on machines installed on site.

10.2.3.1 DC HV Testing

British and American Standards allow d.c. to be used for high voltage testing by agreement. In this respect we would comment as follows:

1. We do not consider that high voltage testing on site is necessary or desirable on a machine that has already passed its tests in the factory in accordance with the above Standards. However, if the Purchaser decides to carry out such tests, we draw particular attention to the requirement that the machine shall be clean and thoroughly dried out.
2. We do not consider that dc high voltage testing serves a useful purpose since the potential distribution on stator end windings under dc testing is different from that which exists under ac for which the machine was designed. However, if the Purchaser wishes to carry out this test he should refer to the appropriate Standard. The value of the direct voltage shall be not greater than the RMS value of the alternating voltage specified for the acceptance test in the factory multiplied by 0.8 x 1.6 in the case of British Standards and 0.85 x 1.7 in the case of the American Standards. The maximum duration of the test is 1 minute.

3. After dc high voltage testing the windings should be earthed for a minimum period of 16 hours. **WARNING**: If the windings are earthed only momentarily, a voltage will build up following the removal of the earth connection.
4. If a failure should occur during a site test on a winding that has already passed the full voltage test in the factory, the responsibility for repair shall be on the Purchaser. The exception is where *BRUSH* is responsible for site erection and commissioning, and where the test is carried out by agreement and by our own personnel.

10.2.3.2 Routine HV Testing

If, after a major overhaul, it is felt necessary to prove the windings by HV testing the following procedure may be considered, but the decision to conduct these tests and the responsibility for all possible consequences remain with the Customer. ***In general, potentially destructive HV testing is not recommended***. The simple insulation resistance measurement method is preferred (See Section 10.2.2).

1. Essential Pre-Conditions (Stator)
   a. Remove neutral link and disconnect surge capacitors.
   b. Measure the insulation resistance and polarisation index at 5000V on each phase in turn with the other two phases earthed.
   c. The minimum Insulation Resistance (IR) for windings, measured for 1 minute, at various rated voltages and core temperatures are given below:

Table 10-3 Stator Insulation Resistance Values for Given Temperature and Voltage Rating

		Rated Voltage				
		10kV	**11kV**	**11.5kV**	**13.8kV**	**15.5kV**
Minimum insulation resistance at stated core temperatures	**Below 20°C**	42MΩ	50MΩ	55MΩ	80MΩ	100MΩ
	20 to 25°C	35MΩ	42MΩ	45MΩ	65MΩ	82MΩ
	Above 25°C	30MΩ	37MΩ	40MΩ	57MΩ	72MΩ

   d. For machines with a high number of slots it may be possible to reduce the above values.
   e. The minimum polarisation index is 1.5.

10.2.3.3 Stator DC Leakage Current HV Test

1. Test Voltage = VL x √2 x 1.2. For example 13.8kV x √2 x 1.2 = 23.4kV dc
2. The test voltage, as defined above, should be applied in approximately 2kV increments to each phase in turn to earth (with the other two phases earthed), holding for one minute at each stage.
3. Leakage current for each step should be recorded and plotted. A sound winding will provide a smooth steady increase in current with application of test voltage.
4. If for any reason the current becomes erratic, the test should be abandoned until the cause is identified. Upon completion, the current curves for the three phases should be similar.



Electrical Hazard

For safety, following high voltage dc testing, it is essential that the windings are shorted together and connected to ground for at least 16 hours.

10.2.3.4 Rotor Winding Routine Testing

5. Measure the insulation resistance to earth at 500V maximum (short out rotating rectifier diodes and, when fitted, disconnect the rotor earth fault detector).
6. The minimum acceptable value is 1MΩ if the machine is dry. However, if it has been allowed to become damp almost any low value may be obtained. Provided the contaminant is known to be moisture then a value not less than 10kΩ is acceptable, the best way to dry the rotor out is to run the machine on load.
7. Note: If a winding is heavily contaminated, initial measurements to earth should be carried out using a low voltage ohmmeter, e.g. *'Fluke'* or similar. If readings are low, then the 500V instrument must not be used.
8. If desired an ac impedance pole balance test may be performed as follows:
    a. With the end caps still in situ apply a current, typically 5-10A RMS 50-60Hz, to the two conductors of the `D' lead. Measure the total voltage. Measure the voltage between each `D' lead conductor and the winding centre point; the sum of these measurements should equal the supply voltage.
    b. On frame 6, 7 and 8 rotors (12 coil) the centre point is at the connection end between the two No. 6 coils at the bottom.
    c. On frame 9 rotors (14 coil) the centre point is at the connection end between the No. 7 coils at the top.
    d. For sound coils/poles, readings within ±5% are satisfactory.
9. Measure the winding resistance using a suitable low resistance bridge. Compare the value with the original test information contained in the Contract Quality Dossier. Ensure the correct temperature correction factor is used.

10.2.3.5 Exciter Components

Measure the insulation resistance to earth at 500V maximum on the pilot exciter, main field, armature and rectifier assembly (short out rotating rectifier diodes and, when fitted, disconnect the rotor earth fault detector).

10.2.4 Auxiliary Equipment

All auxiliary equipment should be checked as far as possible by energising each item individually to make sure it operates correctly.

10.3 Bearing Insulation Test

1. Insulation is necessary at the main exciter end (or slipring end if fitted) bearing. As an aid to standardisation, all *BRUSH* DAX generators have both bearings insulated. The EE bearing earth link wire should be left disconnected (bearing bush insulated) and the turbine end bearing earth link connected (bearing bush uninsulated).
2. All bearings are insulated with substantial insulation pads forming part of the bearing bush and normally do not require checking. However, if a thermocouple, jacking oil pipe or other device is attached to the bush, it is necessary to ensure that the resistance between the thermocouple wiring, jacking oil pipe etc. and the shaft with the machine stationary, is not less than 10kΩ using an ohmmeter or 500V *Megger*.
3. Also, if work has been undertaken check the insulation between the seals and the bearing housing after inserting insulation film between the seals and the shaft.

4. **Note**: Any rotating machinery or instrumentation equipment with bearings coupled to the generator shaft at the main exciter end (or slipring end if fitted) must have insulated bearings or be coupled through an insulated coupling.
5. The non-main exciter end bearing is also insulated to allow checking of the insulation on the main exciter end bearing bush when the generator is stationary. This can only be done if the shaft earthing brush is lifted and the generator is uncoupled from the turbine/gearbox plus the shorting link across the bearing at the turbine end disconnected. Alternatively, if desired, the bearing bush insulation can be checked with the machine running at normal speed to establish an oil film.
6. With the machine running at normal speed to establish an oil film in the bearing that will prevent electrical contact between shaft and bearing, an ohmmeter can be applied across the insulation. If the resistance is below 10kΩ, the cause must be investigated. Possible causes are:
7. Fine metallic swarf bridging the insulation, particularly in bolt or dowel holes.
8. Short circuiting of insulation by instrumentation or pipework.
9. If detailed investigation is required to locate the short circuit, it may be desirable to remove the top half-bearing cap and lift the shaft a small amount to break the electrical circuit from shaft to bearing. This enables further checking of the insulation to be carried out without running the machine. (With the shaft lifted a 500V *Megger* may be used to check the insulation between the bush and housing).

11. Initial Start-Up

11.1 Lubricating Oil Systems

11.1.1 Oil System Check

1. When preparing to run for the first time, following installation or maintenance, ensure that the oil system, and standby, or emergency facilities are fully operational.
2. Also ensure that there is an adequate level of oil in the lube oil tank/reservoir.
3. A visual confirmation of oil flow at the bearings can be obtained through available sight glasses.

11.1.2 Systems with Shaft Driven Oil Pumps

1. On generators fitted with a shaft driven lubricating oil pump the normal start sequence is to check that the oil tank temperature is above 3°C prior to starting. This is normally maintained above 10°C by the tank heater.
2. Check for a satisfactory oil level signal, and then start the main AC pump. The oil system is self-venting.
3. Upon receipt of satisfactory lubricating oil supply pressure it is permitted to start the shaft turning.
4. The AC motor driven pump must not be turned off until a main shaft speed well in excess of 400rpm has been reached - use an auxiliary speed switch on the turbine or governor for this purpose.
5. The AC pump should revert to standby in the event of loss of pressure in the oil system and any other pumps, if supplied, should be set to standby in sequence.

11.1.3 Systems with Motor Driven Pumps

1. On generators with lubrication systems supplied entirely by motor driven pumps the normal start sequence is to check that the oil tank temperature is above 3°C prior to starting. This is normally maintained above 10°C by the tank heater.
2. Check for a satisfactory oil level signal, and then start the main AC pump. The oil system is self-venting.
3. When run down tanks are supplied wait for the `run down tank full' signal before proceeding further. When they are not supplied wait until the pressures stabilise before proceeding. Upon receipt of these signals it is permitted to start the jacking oil pump, if fitted.
4. Availability of the main pump standby system should be confirmed prior to turning the shaft.

11.1.4 All Oil Systems

1. When fitted, the electrostatic precipitator and fan demister unit should be energised prior to turning the shaft. If desired from a sequencing point of view, the demister can be run several hours before start up.
2. Operation of the temperature control devices should be checked during the first runs.
3. It is bad practice to continue running without an available standby oil pump. Whenever a machine trips to the last standby pump it should be shut down as quickly as possible.

11.2 Initial Start-Up Check List

Before starting the machine refer to the Installation Checklist (Section 12.1).

11.3 Initial Running Test (Prior To Synchronising)

1. The excitation circuit should be disconnected before running the generator for the first time on site. This will ensure that the generator cannot be excited unintentionally before the mechanical aspects have been checked. Remember that the generator may generate at least 5% of nominal voltage even when unexcited due to residual magnetism. The generator output terminals and any connected cable should therefore be insulated accordingly.
2. Ensure that the lubrication system is fully operational (See Section 11.1).
3. When the generator is run for the first time on site it should be run at progressively increasing speeds, checking that there are no abnormal noises such as rubbing, clicking, knocking or scraping. Any such noises must be fully investigated.
4. Check that the generator is running in the direction of rotation marked by the arrow on the frame.
5. Check that the shaft is running in the correct axial position as indicated by the position flag, allowing for thermal expansion of prime mover. (This does not apply in cases where there is a thrust bearing in the generator or package).
6. Monitor bearing temperature for excessive heating.
7. Check for oil leakage after a period of 6 hours running. The presence of oil can be attributed to one of the following conditions:
8. Pressurised air supply tubes disconnected.
9. Omission of '*Hylomar*' jointing compound at seal joint face.
10. Poor bearing drain ventilation.
11. Similar inspection for oil leakage should be made at convenient intervals throughout the operating life of the machine (for recommended intervals (See Volume 2).

11.4 Pilot Exciter Magnetisation

The pilot exciter is shipped from the works fully magnetised and stabilised. With normal use it should not be necessary to re-magnetise the permanent magnets.

Measure the pilot exciter open circuit RMS Voltage at rated speed. If the measured voltage is less than the value given on the pilot exciter rating plate, adopt the following procedure:

1. If for any reason the magnets have been removed then they must be replaced with alternate poles outermost, e.g. North - South - North etc.
2. Obtain a heavy duty DC power supply to give 90 volts minimum. e.g. - 8 heavy-duty 12-volt batteries in good condition connected in series with very short copper links of 25 square millimetre minimum cross-section.
3. Connect the power supply via a 200-amp cartridge fuse in series with a 500-amp switch to pilot exciter terminals 1 and 2. To minimise resistance the leads/links must have a minimum cross-section of $25mm^2$ and to be as short as possible.
4. Set the centre line of a rotor pole in line with the centre line of a stator coil group. A small plugged hole for viewing is incorporated in the pilot exciter casing. Otherwise the inboard endplate may be removed.
5. Switch the current for 1 to 2 seconds to remagnetise the permanent magnets. Do not apply for more than 2 seconds as this can cause overheating and deformation of the stator coils.
6. Re-assemble and stabilise pilot exciter voltage by running at rated speed for one minute with the pilot exciter terminals short-circuited. (Short circuit current will not exceed 65 amps.)

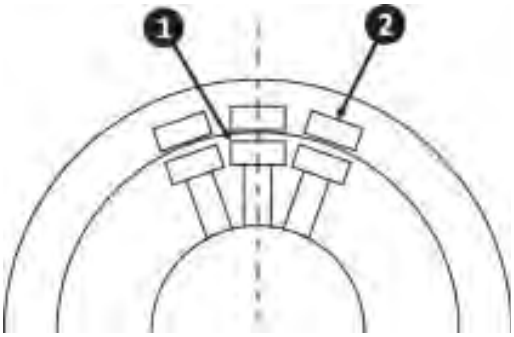

Figure 11-1 Rotor Position For Magnetisation

1. Permanent Magnet Generator (PMG) Rotor Pole
2. Permanent Magnet Generator (PMG) Stator Coil Group

11.5 Open Circuit Test

1. As soon as the switchgear is ready to accept voltage the generator can be excited on hand control. The excitation should be increased gradually until the generator voltage is up to its correct nominal value. The no load excitation current should be measured and compared with the value given on the works test sheet. The diode failure indicator should be checked on brushless generators running at normal voltage by pressing the test button. If diodes, and fuses when fitted, are healthy the warning lamp should light up only when the button is pressed.
2. The phase sequence should be checked by means of a phase sequence indicator connected to the output of the generator voltage transformer (VT). If the phase sequence is incorrect at this point it should be checked directly on the generator terminals. The Phase sequence indicator may be connected directly to the generator terminals with the excitation switched off provided that the residual voltage does not exceed the rated voltage of the phase sequence indicator.
3. While running at full voltage the opportunity should be taken to check that the VT output voltages are balanced and reaching the instruments and protective relays as required. The calibration of the voltmeter should be checked. If an overvoltage or undervoltage relay is provided, this can be checked functionally by adjusting the voltage on the generator with the excitation on hand control to the limits of operation required on the relays. Take care not to over-flux transformers or exceed 120% volts for more than a few minutes, otherwise stator core damage could occur.
4. The excitation can now be switched to automatic control and the AVR should be checked in accordance manufacturer's instructions.

11.6 Short Circuit Test

1. It is desirable to carry out a short circuit test on the generator before synchronising or applying load. The main advantage of a short circuit test is that it affords a convenient and effective means of checking certain aspects of the generator protection before closing the circuit breaker onto a live system (See Section 11.8).
2. An essential requirement for a short circuit test is the provision of some means for short circuiting the generator on the busbar side of the generator circuit breaker. A facility may already be provided in the switchgear for earthing the generator that would be equally suitable as a short circuit. It is important to ensure that the

generator current transformers (CTs) are included in the short circuit loop and that any facility provided for executing the short circuit is capable of carrying the full load current continuously.

3. The short circuit should be applied before the generator is started and the excitation brought up slowly on hand control when the generator is up to full speed. The excitation should be adjusted so as to circulate full load current. When operating in this state it should be possible to check the following features:
4. Panel ammeter (on all 3 phases).
5. Over-current, differential and negative sequence protection.
6. Heavy current connections.
7. Generator cooling system.
8. Stator winding Embedded Temperature Detector (ETD's) Instruments.
9. Care should be taken to ensure that the generator circuit breaker cannot trip whilst operating in this mode. Circuit breakers with a built-in earthing facility are usually interlocked to prevent them tripping electrically whilst earthed down. Arrangements should be made to prevent the prime mover shutting down unnecessarily during these tests.

11.7 Phase Sequence Matching

It is important to appreciate that a synchroscope only compares two single-phase voltages and therefore has no means of comparing phase sequences. The phase sequence of the generator to be synchronised should therefore be checked by means of a phase sequence indicator and compared with that of the busbars before synchronising for the first time. This test also affords a convenient opportunity for checking the synchroscope.

If it is convenient to de-energise the busbars from their normal supply and to re-energise them from the generator the phase sequence of both supplies can be checked and compared at the output of the busbar Voltage Transformer. The procedure is as follows:

1. With busbars energised from their normal supply check phase sequence at output of busbar VT.
2. De-energise busbars, run the generator and excite it to give normal voltage.
3. Close generator contact breakers (CB) so as to energise busbars from generator.
4. Check phase sequence at busbar VT that should be the same as 1 and check that the synchroscope shows synchronism.

If the busbars cannot be de-energised a similar process can be performed on the generator VT but in this case it is necessary to open up the neutral point on the generator so that the generator terminals may be energised from the busbars without imposing the voltage across the windings. The procedure in this case is as follows:

1. Open up neutral point of generator to separate the phases.
2. Close generator CB onto the live busbars (with generator stationary).
3. Check phase sequence at output of generator VT and check that synchroscope shows synchronism.
4. Open generator CB, replace neutral links, run generator and excite to normal voltage.
5. Check phase sequence at output of generator VT and compare with results of 1 in the preceding paragraph.

11.8 Protection

Before a generator is put into service the protection should be checked as far as possible under simulated fault conditions.

If a master trip relay is provided the logical course would to be separately check the following functions:

1. That the master trip relay correctly trips the generator circuit breaker and shuts down the engine.
2. That each separate protective relay correctly operates the master trip relay. The output of the latter should be temporarily disabled to prevent it tripping the circuit breaker and shutting down the prime mover in response to each simulated fault.

Every effort should be made to perform realistic functional tests on each relay. Typical methods of achieving this are as shown in Section 12.2.

12. Reference Data

12.1 Installation Checklist

Subject to the requirements of the Contract and scope of supply, the following checks are recommended:

12.1.1 Mechanical

12.1.1.1 Rotor

Table 12-1 Rotor Checklist

Item	Description	N/A	Checked	Unchecked
1.1	The rotor/shaft system is clean and contaminant free			
1.2	Cooling paths/vents are unobstructed			
1.3	All electrical connections are secure			
1.4	All attached components are secure (diode carrier, metrosils etc)			
1.5	Fan blades have been visually inspected for integrity and found to be sound			
1.6	Rotation of rotor/shaft has been checked and is correct			
1.7	Conditions of commutator/sliprings checked and are acceptable			
1.8	Journal dimensions and condition checks carried out and recorded on QC sheet			
1.9	Check coupling run-out radially and axially			
1.10	Condition of shaft driven lube oil pump coupling checked and is acceptable			
1.11	Check rotor earth brush length and cleanliness of track			
1.12	Megohmmeter checks on rotor completed and recorded on QC sheet			
1.13	Operation of fuses and diodes checked and are acceptable			
1.14	Operation of earth fault detectors checked			
1.15	The shaft system is free from discoloration and rub marks			
1.16	All air gaps have been taken and recorded on QC sheet			
1.17	Fans fitted are for correct rotation			

12.1.1.2 Stator

Table 12-2 Stator Checklist

Item	Description	N/A	Checked	Unchecked
2.1	Stator windings, core and compartments are clean and contaminant free			
2.2	Cooling vents are clean and contaminant free			
2.3	Endwindings, support blocks and boards have been checked for movement and are secure			
2.4	All electrical connections are secure			
2.5	Main terminal bushes are secure			
2.6	Main exciter windings are clean and contaminant free			
2.7	Main exciter windings are sound and damage free			
2.8	PMX windings are clean and contaminant free			
2.9	PMX windings are sound and damage free			
2.10	Anti-condensation heaters are free from damage			
2.11	Anti-condensation heaters functional			
2.12	Megohmmeter and P.I. insulation checks completed and recorded on QC sheet			
2.13	Terminal boxes are clean and contaminant free			
2.14	Busbars and CTs are secure			
2.15	Are terminal box blow-out foils perforated or damaged?			

12.1.1.3 Bearings

Table 12-3 Bearing Checklist

Item	Description	N/A	Checked	Unchecked
For Journal Bearings				
3.1	Bearing bush dimensional checks completed and recorded on QC sheet			
3.2	Visually check and record that the bearing bush has been installed the correct way round, noting that the bearing lube oil feeds line up.			
3.3	Bearing clearances taken (leads) and recorded on QC sheet			
3.4	Bearings checked for skew/twist (horns) and recorded on QC sheet			
3.5	Bearing housings are clean and contaminant free			
3.6	The bearing bush shows no evidence of damage			
3.7	Lubricating rings (if fitted) are secure			
3.8	Self contained bearings are filled with the correct grade and amount of oil			
3.9	All housing joints are correctly sealed with *Hylomar*			
3.10	Seals have been inspected, set and clearances recorded on QC sheets			
3.11	Bearing insulation checked and is acceptable and recorded on QC sheet			
3.12	Bearing seal pressures checked and are acceptable			
3.13	Thrust bearing pads are undamaged			
3.14	All connections to thrust bearings are secure			
3.15	All connections to jacking oil system are secure			
For rolling element bearings				
3.16	Covers removed and bearing visually inspected			
3.17	Are greasing intervals being maintained?			
3.18	Re-grease if necessary			
3.19	Are correct bearings fitted?			
3.20	Check grease type being used is correct			
3.21	Bearing insulation has been checked and is acceptable			

12.1.1.4 Lube Oil System

Table 12-4 Lubrication Oil System Checklist

Item	Description	N/A	Checked	Unchecked
4.1	Has lube oil system been flushed (new installations) and units overhauled where necessary?			
4.2	Are self-contained bearings filled with correct grade and amount of oil?			
4.3	Record orifice sizes (if fitted) on QC sheet			
4.4	Operation of a.c. lube oil pump is acceptable			
4.5	Operation of d.c. lube oil pump is acceptable			
4.6	Operation of shaft mounted oil pump is acceptable			
4.7	Record all pressures and temperatures at standstill and during running conditions on QC sheet			
4.8	Check that flow to the bearings is satisfactory			
4.9	Bearing housing vent system is operational			
4.10	Oil tank vent system is operational			
4.11	Check that the Filtermist/precipitator unit is operational			
4.12	Check and record filter differential pressure on QC sheet			
4.13	Inspect pipes, flanges, bearing housings etc			
4.14	Obtain oil samples for analysis			
4.15	Record jacking oil pressures on QC sheet			
4.16	Record jacking shaft lifts at each bearing on QC sheet			
4.17	Inspect jacking oil system for leaks			

12.1.1.5 Interface to Prime Mover Plant

Table 12-5 Prime Mover Plant Interface Checklist

Item	Description	N/A	Checked	Unchecked
5.1	Shaft system alignment checks have been completed and recorded on QC sheet			
5.2	The security of coupling bolts is acceptable			
5.3	The security of shear pins is acceptable			
5.4	The axial positioning and magnetic centre flag are correct			
5.5	Are all the coupling guards fitted?			
5.6	Do the coupling guards foul the shaft system?			
5.7	Have the gearbox centralising rings been removed?			
5.8	Load gearbox vent fans are operational			
5.9	Gearbox has been inspected for oil leaks and is leak free			

12.1.1.6 Cooler

Table 12-6 Cooler Checklist

Item	Description	N/A	Checked	Unchecked
6.1	The air circuit is clean and contaminant free			
6.2	The heat exchanger tubes are free from corrosion			
6.3	Are the tube banks free from external blockages?			
6.4	Water cooled tube bundles have been pressure tested and results recorded on QC sheet			
6.5	Tube bank header boxes are secure			
6.6	All gaskets are satisfactory			
6.7	All fixings and fastenings are secure			
6.8	Operation of louvres and dampers is acceptable			
6.9	Record operational pressure, temperatures and flows on QC sheet			
6.10	The leak detectors are operational			
6.11	The cooler duct work is secure and leak free			



12.1.1.7 Frame

Table 12-7 Frame Checklist

Item	Description	N/A	Checked	Unchecked
7.1	All fixings and fastenings are secure			
7.2	Fan shrouds are secure and fittings have been torque tightened where applicable			
7.3	The condition of all gaskets (replace if defective) is satisfactory			
7.4	Are there any broken welds or missing welds?			
7.5	Cleanliness of the unit is acceptable			
7.6	Condition of the paint work is acceptable			

12.1.1.8 Canopy

Table 12-8 Canopy Checklist

Item	Description	N/A	Checked	Unchecked
8.1	Operation of the doors is acceptable			
8.2	Condition of the door seals is acceptable			
8.3	Sealing of wall and roof panels is acceptable			
8.4	Is there any evidence of water ingress?			
8.5	Louvres and dampers are operational			
8.6	All canopy lights are functional			
8.7	The canopy is clean and free from contamination			
8.8	The canopy paint work is free from damage			
8.9	Canopy enclosure at a positive pressure			

12.1.1.9 Foundations

Table 12-9 Foundation Checklist

Item	Description	N/A	Checked	Unchecked
9.1	Type of foundation: a. structural steel b. common bed on concrete c. concrete d. common bed on AV mounts			
9.2	Holding down bolts are secure			
9.3	Is the unit doweled to the foundation?			
9.4	Are there any cracks or broken welds?			
9.5	Condition of the anti-vibration mounts are satisfactory			
9.6	Stator feet jacking holes filled/sealed following machine alignment?			

12.1.1.10 Installation

Table 12-10 Installation Checklist

Item	Description	N/A	Checked	Unchecked
10.1	The foundations are clean, dimensionally correct and are ready to accept the unit			
10.2	Foundation bolt pockets are clean and dry			
10.3	Centre lines have been indelibly marked			
10.4	Bedplate/unit levelling completed			
10.5	Transit packing removed			
10.6	Rotor checks completed (See Table 12-1)			
10.7	Stator checks completed (See Table 12-2)			
10.8	Bearing checks completed (See Table 12-3)			
10.9	Lube oil checks completed (See Table 12-4)			
10.10	Interface checks completed (See Table 12-5)			
10.11	Cooler checks completed (See Table 12-6)			
10.12	Frame checks completed (See Table 12-7)			
10.13	Canopy checks completed (See Table 12-8)			
10.14	Foundation checks completed (See Table 12-9)			
10.15	QC documentation completed			
10.16	Acceptance certificate signed by Customer			
10.17	Mechanical running checks: a. Unusual noises b. Record all parameters on QC sheet c. Direction of rotation d. Check vibration levels on the unit and record on QC sheet			

12.1.1.11 Overhaul

Table 12-11 Overhaul Checklist

Item	Description	N/A	Checked	Unchecked
11.1	Relevant items in 1) through to 10) are completed			
11.2	IMPORTANT to obtain before and after data			
11.3	Quality Control documentation completed			
11.4	Acceptance certificate signed by Customer			

12.1.2 Electrical

12.1.2.1 Machine Preliminary Checks

Table 12-12 Generator Electrical System Checklist

Item	Description	N/A	Checked	Unchecked
1.1	Check generator nameplate details			
1.2	Check generator externals			
1.3	Check all auxiliary terminal boxes			
1.4	Check main generator earthing			
1.5	Check operation of heaters			
1.6	Remove side plate, check internal condition of generator			
1.7	Check shaft earthing brush is secure			
1.8	Check shaft earthing brush track is clean			
1.9	Check main exciter/PMG for contamination			
1.10	Inspect generator for mechanical damage			
1.11	Check for shortages			
1.12	Check coupling guards are fitted			
1.13	Check terminal box earthing			
1.14	Check REFM transmitter is secure			
1.15	Inspect diode carrier			
1.16	Check transit packing material has been removed			

12.1.2.2 Machine Static Commissioning Checks

Table 12-13 Static Commissioning Checklist

Item	Description	N/A	Checked	Unchecked
2.1	Carry out PI tests with phases split. Record results on QC sheet.			
2.2	Carry out rotor IR test. Record results on QC sheet.			
2.3	Carry out IR test of PMG and main exciter field. Record results on QC sheet.			
2.4	Check all RTD cold resistances. Record results on QC sheet.			
2.5	Check bearing insulation (if applicable).			
2.6	Check operation of coolant leak detectors.			
2.7	Check all on base wiring to relevant drawings.			
2.8	Check for leaks from cooling system.			
2.9	Check lube oil system commissioned and with no leaks.			
2.10	Check jacking oil system is commissioned and check lifting pressure.			

12.1.2.3 Neutral Cubicle Machine Static Commissioning Checks

Table 12-14 Neutral Cubicle Generator Static Commissioning Checklist

Item	Description	N/A	Checked	Unchecked
3.1	Check neutral cubicle for dirt and moisture ingress. Clean as required.			
3.2	Check condition of bushings and insulators.			
3.3	Check all connections are correctly tightened.			
3.4	'Flick-test' all neutral CTs for direction against relevant drawing.			
3.5	Carry out ration test of all neutral CTs. Record results on QC sheet.			
3.6	Carry out magnetisation curve tests of all neutral CTs. Record results on QC sheet.			
3.7	Check condition of pressure relief diaphragms.			
3.8	Check all wiring to relevant drawing.			
3.9	Carry out ratio check of neutral earthing transformer. Record results on QC sheet.			
3.10	Carry out IR test of neutral earthing transformer. Record results on QC sheet.			
3.11	Check position of CT shorting links in neutral CT terminal box.			

12.1.2.4 Lineside Cubicle Static Commissioning Checks

Table 12-15 Line Cubicle Generator Static Commissioning Checklist

Item	Description	N/A	Checked	Unchecked
4.1	Check lineside cubicle for dirt/moisture ingress and clean as required.			
4.2	Check condition of bushings, insulators and surge arrestors.			
4.3	Check all connections are correctly tightened.			
4.4	'Flick-test' lineside CTs for direction. Check against relevant drawing.			
4.5	Carry out ratio and magnetisation curve checks of lineside CTs. Record results on QC sheet.			
4.6	Check condition of pressure relief devices.			
4.7	Check all wiring to relevant drawing.			
4.8	Check fuses/MCBs for correct rating and condition.			
4.9	Carry out IR test of lineside VTs. Record results on QC sheet.			
4.10	Carry out ratio/vector grouping test of lineside VTs. Record results on QC sheet.			
4.11	Check position of CT shorting links on lineside CT terminal rail.			

12.1.2.5 Switchgear Commissioning Checks

Table 12-16 Switchgear Commissioning Checklist

Item	Description	N/A	Checked	Unchecked
5.1	Inspect equipment for damage.			
5.2	Inspect equipment for cleanliness and clean as required.			
5.3	Check integrity of all connections to manufacturer's recommended torque settings.			
5.4	Carry out ductor testing of busbars.			
5.5	Carry out IR and HV testing in line with manufacturer's instructions.			
5.6	'Flick-test' CTs for direction.			
5.7	Carry out ratio and magnetisation curve checks of switchgear CTs. Record results on QC sheet.			
5.8	Carry out ratio/vector grouping test of lineside VT's. Record results on QC sheet.			
5.9	Check operation of heaters.			
5.10	Check fuses are correctly rated.			
5.11	Check mechanical operation of circuit breakers.			
5.12	Fully function test electrical operation of circuit breakers.			
5.13	Check integrity of earthing devices.			

12.1.2.6 Power Transformer Checks

Table 12-17 Power Transformer Checklist

Item	Description	N/A	Checked	Unchecked
6.1	Check nameplate details.			
6.2	Check operation of heaters.			
6.3	Check for damage.			
6.4	Check equipment for earthing.			
6.5	Check condition of breather crystals.			
6.6	Check connection data.			
6.7	Check position of isolating valves.			
6.8	Take oil sample and test for contamination.			
6.9	Check for oil leaks.			
6.10	Carry out IR tests. Record results on QC sheet.			
6.11	Carry out ratio/vector grouping test. Record results on QC sheet.			
6.12	Check setting and operation of all thermostats.			
6.13	Carry out IR tests of motors.			
6.14	Check operation of cooling fans.			
6.15	Check tightness of connections.			
6.16	Check terminal box pressure relief devices			

12.1.2.7 System Interface Wiring

Table 12-18 System Interface Wiring Checklist

Item	Description	N/A	Checked	Unchecked
7.1	Carry out wiring checks between all system components.			
7.2	Record relevant drawing numbers.			

12.1.2.8 Generator Control and Protection Panel

Table 12-19 Control and Protection Panel Checklist

Item	Description	N/A	Checked	Unchecked
8.1	Inspect panel for mechanical damage.			
8.2	Check for ingress of contaminants.			
8.3	Check all fuses/MCB's are the correct rating.			
8.4	Check mechanical operation of all selector switches.			
8.5	Check panel earthing arrangements.			
8.6	Check tightness of connections.			
8.7	Check all integral components voltage selection links.			
8.8	Check links, DIP switch settings of all electronic components.			
8.9	Connect AC supply, check operation of lighting and heating circuits.			
8.10	Connect DC supplies and function test control circuits to schematic diagrams.			
8.11	Check calibration of all panel meters and transducers. Record on QC sheet.			
8.12	Carry out secondary injection testing of protection relays. Record on QC sheet.			
8.13	Commission all electronic units.			
8.14	Carry out ratio checks of interposing CT's and VT's.			
8.15	Function test interface with other system components.			



12.1.2.9 Pre-Running Checks

Table 12-20 Pre-Running Checklist

Item	Description	N/A	Checked	Unchecked
9.1	Check all generator covers are fitted.			
9.2	All generator static tests/commissioning complete.			
9.3	All terminal box covers secured or adequate safety barriers in place.			
9.4	All HV switchgear and busworks commissioned and ready to be made 'live'.			
9.5	All control and monitoring systems commissioned and in service.			
9.6	Fire detection system on line.			
9.7	Check state of all system isolating valves.			
9.8	Lube oil system running.			
9.9	Cooling system running			
9.10	Permit to work lifted or suspended.			
9.11	Access restricted to test areas.			
9.12	Communications set up between machinery and control points.			
9.13	Check for clear access and escape routes.			

12.1.2.10 Initial Running Tests

Table 12-21 Initial Running Tests Checklist

Item	Description	N/A	Checked	Unchecked
10.1	Rotation of rotor/shaft has been checked and is correct.			
10.2	Vibration levels are acceptable to continue the test.			
10.3	Carry out rub check at low speed.			
10.4	Carry out in-zone short circuit test to prove correct operation of generator differential protection.			
10.5	Dynamically prove correct operation of generator stator earth fault protections.			
10.6	Prove correct operation of protection lock out relays.			
10.7	Prove correct operation of field suppression circuit.			
10.8	Prove correct operation of circuit breaker trips.			
10.9	Prove correct operation of prime mover trips.			
10.10	Carry out 'out of zone' short circuit test to prove correct operation of generator over current protection.			
10.11	Carry out 'out of zone' short circuit test to prove differential protection stability.			
10.12	Record short circuit curve data on QC sheet.			

12.1.2.11 Open Circuit Commissioning Checks

Table 12-22 Open Circuit Commissioning Checklist

Item	Description	N/A	Checked	Unchecked
11.1	Commission manual excitation system.			
11.2	Record open circuit test data on QC sheet.			
11.3	Commission automatic excitation control system (AVR).			
11.4	Commission and test rotor earth fault monitoring equipment.			
11.5	Carry out synchronising system commissioning procedures.			
11.6	Record no-load running data on QC sheet.			

12.1.2.12 Parallel Running Checks

Table 12-23 Parallel Running Checklist

Item	Description	N/A	Checked	Unchecked
12.1	Prove correct operation of manual synchronising systems.			
12.2	Prove correct operation of automatic synchronising systems.			
12.3	Carry out load excitation system commissioning tests.			
12.4	Prove correct operation of reverse power protection.			
12.5	Prove correct operation of generator field failure protection.			
12.6	Record load data at all steps of increasing load and during sustained full load run on QC sheet.			
12.7	Carry out load rejection tests, check AVR response.			

12.1.2.13 Final Data at Handover

Table 12-24 Final Data at Handover Checklist

Item	Description	N/A	Checked	Unchecked
13.1	Vibration data to QC sheet.			
13.2	Lube oil pressures and temperatures to QC sheet.			
13.3	Bearing seal manometer readings to QC sheet.			
13.4	Record all data to QC sheet.			
13.5	Complete all relevant documentation.			
13.6	Acceptance Certificate signed by Customer.			

12.2 Protection Relay Function Tests

Table 12-25 Protection Relay Functional Tests

Protective Relay	Method of Test
Generator Differential	Short circuit two generator terminals with cable rated at 10% of the generator current. Check that corresponding phases of the differential relay output at zero or very low excitation on hand control. Transfer one end of shorting cable to the third phase and repeat test to prove third phase.
Overcurrent	Generator on short circuit, excitation on hand control. Adjust excitation to provide current at the required tripping level of the relay. Relay can be plugged down if preferred to enable test to be carried out at a lower current level.
Neutral Displacement	Earth one of the generator terminals with cable rated at 15 amps. Increase generator voltage gradually with excitation on hand control to the required operating point of the relay.
Overvoltage and Undervoltage	With AVR on auto control adjust voltage by the trim control on the AVR to the required operating point of the relay. If the required range of voltage adjustments is not obtainable on auto control the test can be performed on hand control.
Negative Sequence	Temporarily transfer the current feed from one phase of the relay to corresponding points in parallel with one of the other phases. Run generator on short circuit with excitation on hand control. Negative sequence current sensed by relay is 58% of the balanced three-phase current in the generator.
Reverse Power	The testing of this relay has to await Power synchronisation on to live busbars. The relay is checked by gradually reducing the speed setting of the governor beyond the point of zero power to the required operating point of the relay. The reverse power can be measured if desired by temporarily reversing the current feeds to each phase of the wattmeter. The wattmeter will then read positive in response to negative power. The tests should be repeated at high values of positive and negative KVAr (by suitable adjustment of the excitation) to prove that the operating level of the relay is substantially independent of KVAr.
Under/Over Excitation and Field Failure	The testing of these relays has to await synchronisation on to live busbars of a sufficient capacity to absorb high levels of positive and negative KVAr without excessive voltage variation. This requirement can be simplified if necessary by running another similar generator in parallel to supply or absorb a substantial proportion of the KVAr. The relay is tested by running the generator on hand control at low power and adjusting the excitation to the required operating level of the relay.

Notes

BRUSH GROUP HQ (GB)
NOTTINGHAM ROAD
LOUGHBOROUGH
LEICESTERSHIRE,
LE11 1EX UNITED KINGDOM
T +44 (0) 1509 611511
E SALESUK@BRUSH.EU

BRUSH HMA B.V (NL)
PO BOX 3007
2980 DA
RIDDERKERK, THE NETHERLANDS
T +31 (0) 180 445500
E SALESNL@BRUSH.EU

BRUSH SEM S.R.O(CZ)
TŘ. EDVARDA BENEŠE 39/564
301 00 PLZEŇ
CZECH REPUBLIC
T +420 378 210 111
E SALESCZ@BRUSH.EU

BRUSH (US)
15110 NORTHWEST FREEWAY,
SUITE 150, HOUSTON, TEXAS. 77040.
UNITED STATES OF AMERICA.
T +1 281 580 1314
E SALESUS@BRUSH.EU

BRUSH GMS (US)
601 BRADDOCK AVE,
TURTLE CREEK, PA,
15145, USA
T +1 412 829 7500
E SALESUS@BRUSH.EU

BRUSH (AE)
PO BOX 390815
DUBAI
UNITED ARAB EMIRATES
T +971 4362 6391
E PETER.BROWN@BRUSH.EU

BRUSH (IN)
SPECTRUM TECHNOLOGIES
801A, A WING,
BSEL TECH PARK,
SECTOR-30A, VASHI,
NAVI MUMBAI - 400705, INDIA.
T + 91 22 27810091/92
E SALES@SOOPL.IN

BRUSH (KR)
ENERTOPIA / AWONS
1203 NONHYEON-ROYAL PALACE
249-6 NONHYEON-DONG GANGNAM-GU
135-010 SEOUL, KOREA
T +65 6848 2146
E PHY@ENERTOPIA.FR

BRUSH JAPAN KK (JP)
1139 THE SOHO
2-7-4, AOMI
KOUTOU KU, TOKYO
135-0064, JAPAN
T +81 3 6380 7091
E SALESJP@BRUSH.EU

BRUSH (SG)
TGM GLOBAL PTE LTD
BLOCK 3026 UBI ROAD 1
#03-162,
SINGAPORE 408719.
T +65 6848 2146
E SALES@GLOBAL-TGM.COM

AFTERMARKET ENQUIRIES

Region	Office Hours	Emergency 24/7	Training Courses	Email
Americas	+1 281 580 1314	+1 281 639 1375	+1 281 580 1314	serviceus@brush.eu
Asia	+44 7985 417891	+44 844 3326527	+44 7985 417891	servicejp@brush.eu
Middle East	+971 5010 12795	+44 844 3326527	+971 5010 12795	serviceme@brush.eu
UK	+44 1509 611511	+44 844 3326527	+44 1509 612219	serviceuk@brush.eu
Central Europe	+31 180 445500	+31 180 445501	+31 180 445500	servicenl@brush.eu
Eastern Europe	+420 378 210717	+420 739 586812	+420 378 210717	servicecz@brush.eu

This publication is issued to provide outline information only which (unless agreed by the company in writing) may not be used, applied or reproduced for any purpose or form part of any order or contract or be regarded as a representation relating to products or services concerned. The company reserves the right to alter without notice the specification, design, price or conditions of supply of any product or service.

BRUSH and the BRUSH logo are copyright protected trademarks. All other company and product names are acknowledged as being the trademarks or registered trademarks of their respective companies.

THIS DOCUMENT AND ITS CONTENTS ARE PROVIDED "AS IS", WITH NO REPRESENTATIONS OR WARRANTIES OF ANY KIND, WHETHER EXPRESS OR IMPLIED, INCLUDING BUT NOT LIMITED TO WARRANTIES OF DESIGN, MERCHANTABILITY, OR FITNESS FOR A PARTICULAR PURPOSE. ALL OTHER LIABILITY ARISING FROM RELIANCE UPON ANY INFORMATION CONTAINED HEREIN IS EXPRESSLY DISCLAIMED.

Printed in the UK

www.brush.eu
www.brushparts.eu

Operating & Maintenance Manual

Volume 2: Generator Operation and Maintenance



Generator Type: **BDAX62-170ER**
Project: **Trailer Mounted Turbogenerator**

Copyright Notice

© 2013-2014 Brush Electrical Machines Ltd. All rights reserved.

Document and Machine Numbers

Manual Number: TP0002020 Issue: B

Publication Date: March 2014

Machine Number(s): 923065.010, 923233.010, 923235.010, 923237.010, 923327.010, 923341.010, 923385.010, 923387.010, 923389.010, 923391.010, 923405.010, 923407.010, 923409.010, 923411.010, 923466.010, 923611.010, 923615.010, 923617.010

Preface

Congratulations on your choice of precision engineered product from BRUSH, the world's leading independent manufacturer of turbogenerators, combining the resources of three major manufacturers of generators for gas turbine, steam turbine and hydro-turbine drive. With manufacturing plants in the UK, the Netherlands and the Czech Republic and with customers across all continents, BRUSH has a truly global presence.

Warnings, Notes and Instructions

The purpose of this manual is to provide information and advice on supplied equipment.

Symbols used in the manual are as follows:



General Notice

Instructions that must be followed.



Ear Protection Notice

Instructions that must be followed.



Important Notice

Important Instructions that must be followed.



General Hazard

Caution to be exercised. Appropriate safety measures to be taken.



Electrical Hazard

Caution to be exercised. Appropriate safety measures to be taken.



Substance Hazard

Caution to be exercised. Appropriate safety measures to be taken.

Cross-document and website hyperlinks are underlined blue.

How to Use the Manual

Mandatory Notice

It is important that any persons responsible for equipment installation, commissioning, operation and maintenance are provided with access to this document, together with relevant/associated additional volumes and third-party information.

It is recommended that prior to undertaking any installation, commissioning, operation or maintenance activities on the equipment, this manual and any associated documentation should be read in its entirety in order to gain a better understanding of system operation.

This manual should be read in conjunction with contract specific, drawings and other first and third-party associated documentation.

All pages and topic headings are numbered for easy reference. Cross-reference(s) to associated paragraphs and documentation is included where appropriate. When referencing particular paragraphs in communications, it is important to specify the Manual Number and the Issue Reference.

The manual, and any amendments, should be maintained for the lifetime of the equipment.

Where this document is included as part of a specific contract, drawings are provided in a separate document volume. First and third-party equipment documents will also be provided as part of the overall contract documentation package.

Copies and Revisions

Additional copies of the latest available versions of manuals are available from BRUSH Aftermarket (See the back cover for contact details). A nominal charge *may* be made for this service.

Feedback

We are constantly seeking to improve the quality and reliability of our products, and we actively encourage user feedback.

Any comments should be addressed to your usual representative, or to BRUSH Aftermarket.

Service and Spares

Quotations for Service and Spares can be obtained from BRUSH Aftermarket at the contact address provided on this document's back cover.

Spare parts information, including prices and lead times, can be obtained from the following website address: http://www.brushparts.eu

BRUSH Aftermarket provides service support 24 hours a day, 7 days a week, supply first class replacement parts, carry out service inspections and maintenance programmes, upgrades and repairs, and comprehensive training programmes for both BRUSH and third-party generators and ancillary products. Further information on BRUSH Aftermarket can be found on our http://www.brush.eu.

Contents

1. General Information 7
1.1 Document Scope 7
1.2 Health and Safety Procedures 7
1.2.1 Delivery Checks 7
1.2.2 Handling 7
1.2.3 Storage 7
1.2.4 General Installation 7
1.2.5 Electrical Installation 8
1.2.6 Operation and Maintenance 8
1.2.7 Lifting Procedures 8
1.2.8 Control of Substances Hazardous to Health (COSHH 1999) 9
1.2.9 COSHH Data for Standard Components 9
1.2.10 Protection and Monitoring Devices 9
1.3 EU Directives 10
1.3.1 Declarations of Conformity 10
1.4 Operation and Maintenance Activities 10
1.5 Pipework Systems 11
2. General Description 12
2.1 General 12
2.2 Stator 12
2.3 Rotor 12
2.4 Internal Air Circuit 12
3. Generator Operation 14
3.1 General Instructions 14
3.2 Solo Operation 15
3.2.1 Starting Up 15
3.2.2 Shutting Down 15
3.3 Parallel Operation 15
3.3.1 kVAr Control 15
3.3.2 Speed Control 16
3.3.3 Synchronising 16
3.3.4 Load Application 16
3.3.5 Shutting Down 17
3.4 External Short Circuit 17
3.5 Long Term Shutdown 17
4. Heaters 19
4.1 Technical Data 19
4.2 Location and Access 19
4.3 Connection 19

4.4 During Shutdown 19
4.5 High Voltage Testing 19
5. Rotating Rectifier Assembly 20
5.1 Twelve Diode Assemblies 20
5.2 Diode and Fuse Replacement 21
5.2.1 General 21
5.2.2 Diode Replacement (Stud Anode/Cathode Types) 21
5.2.3 Fuse Replacement 22
5.3 Preparation of Contact Surfaces 22
5.3.1 Capsule and Stud Fixing Devices with Nut Retention 22
5.3.2 Stud Fixing Device Screwed into a Threaded Hole in a Heatsink 22
5.4 Bolted Electrical Joints 23
6. Bearings, Shaft Seals and Lubrication Oil System 24
6.1 General 24
6.2 Lubrication Oil System 24
6.2.1 Technical Data 24
6.2.2 Bearing Oil Supply 24
6.2.3 Shaft Driven Oil Pump 24
6.2.4 Bearing Oil Drain System 25
6.2.5 Emergency Run-Down Lube Oil System 25
6.2.6 Bearing Jacking Oil System 25
6.3 Bearings 25
6.3.1 Definitions 25
6.3.2 Bearing Parameters 25
6.3.3 Bearing Dismantling and Re-Assembly 25
6.4 Bearing Seals 25
7. Dismantling Bearings/Shaft Seals 27
7.1 General 27
7.2 Procedure 27
7.3 Fixed Profile Spherically Seated Bearings 27
7.4 Thrust Pads 28
8. Assembly and Alignment of Bearing/Shaft Seals 29
8.1 General 29
8.2 Fixed Profile Spherically Seated Bearings 29
8.3 Thrust Pads 30
8.4 Final Bearing Assembly 31
8.4.1 Insulated Bearing Bush 31
8.4.2 Bottom Half Shaft Seal 31
8.4.3 Bearing Seal Setting Clearances Diagram (Machine Stopped) 32
8.4.4 Refit Bearing Cap 32
8.4.5 Fit Top Half Shaft Seal 33

8.4.6 Pressurisation Hoses ... 33
8.4.7 Circulation of Oil through Bearings ... 33
8.4.8 Removal of Bearing RTD Probes ... 33
9. Cooling System ... 35
9.1 Air Cooling System ... 35
10. Rotor ... 36
10.1 Rotor End Cap ... 36
10.2 Protection Against Shaft Voltages and Bearing Currents ... 36
10.3 Rotor Earthing Brush ... 36
10.4 Rotor Withdrawal ... 37
10.4.1 General ... 37
10.4.2 Precautions ... 37
10.4.3 Site Requirements ... 37
10.4.4 Procedure ... 38
10.4.5 Using Overhead Crane ... 38
10.4.6 Without Overhead Crane ... 38
10.5 Rotor Threading Procedure ... 40
10.6 Fan Tip and Air Gap Clearances ... 40
10.7 Rotor Transportation ... 41
10.8 Rotor Balancing ... 42
11. Cleaning ... 44
11.1 Cleaning a Seriously Contaminated Machine ... 44
11.2 Cleaning By Hand (Preferred Method) ... 44
11.3 CO_2 (Dry Ice) Shot Blasting ... 45
11.4 Water Washing ... 45
11.5 Post Insulators and Similar Surfaces ... 45
12. Fire Fighting Equipment ... 46
12.1 Sources of Fire in Generators ... 46
12.2 Generator Fire Protection Equipment ... 46
13. Instrumentation ... 47
13.1 Resistance Temperature Detectors (RTD's) and Thermocouples ... 47
13.1.1 General ... 47
13.1.2 Recommended Alarm and Trip Settings ... 47
13.1.3 Resistance Temperature Detectors ... 47
13.1.4 Overvoltage Protection ... 48
13.1.5 RTD Calibration ... 48
13.1.6 Removal of Bearing RTD Probes ... 48
13.2 Vibration Detectors ... 48
13.2.1 Proximity Vibration Detectors ... 48
13.2.2 Supplier Data ... 49

13.2.3 Fitting A Key Phasor Probe 49
13.2.4 Fitting of Shaft Probes 49
13.2.5 Probe Calibration Verification 49
13.3 Air Filter Pressure Differential Transmitters 50
14. Fault Finding 51
15. Recycling 52
15.1 Introduction 52
15.2 Packaging 52
15.3 Operational Materials 53
15.4 Generator 53
16. Reference Data 55
16.1 Lubricating Oils (ISO VG32) 55
16.1.1 Chemical and Physical Properties of Oils 55
16.1.2 Approved List of Oils 55
16.2 Lubricating Oils (ISO VG46) 57
16.2.1 Chemical and Physical Properties of Esso Teresso 46 57
16.2.2 Approved List of Oils 57
16.3 Torque Wrench Settings for Metric Screws 59
16.4 Hexagon Headed Bolts and Nuts Utilisation Chart 61
16.5 Maintenance Schedule 64
16.5.1 General 64
16.5.2 Extended Idle Period 64
16.5.3 Initial Start-Up Service 64
16.5.4 Ancillary Equipment 65
16.5.5 Regular Service 65
16.6 Maintenance Work Record Sheet 67

1. General Information

1.1 Document Scope

This document provides Installation and commissioning information for the project indicated DAX two-pole Turbogenerator and ancillary equipment.

For identification of main components and an explanation of model type, size and frame codes, refer to Appendix A.

1.2 Health and Safety Procedures

This information is supplied in accordance with Section 6 of the United Kingdom Health and Safety at Work Act 1974 with respect to the duties of manufacturers, designers and installers in providing health and safety information to Customers. The information advises of reasonably foreseeable risks involved with the safe installation, commissioning, operation, maintenance, dismantling, cleaning or repair of products supplied by Brush Electrical Machines Ltd.

Every precaution should be taken to minimise risk. When acted upon, the following precautions should considerably minimise the possibility of hazardous incidents.

1.2.1 Delivery Checks

Check for damage sustained during transport. Damage to packing cases must be investigated in the presence of an Insurance Surveyor.

1.2.2 Handling

Sling packing cases where indicated. Equipment not in a packing case, or removed from a packing case must only be lifted by the lifting points provided. Do not lift complete machines by lugs on heat exchangers or air silencers etc.

1.2.3 Storage

Unless the equipment has been designed for use outside, or specifically packed for outside storage, store all equipment inside a dry building, in line with BRUSH and third-party equipment manufacturer recommendations as/where applicable.

1.2.4 General Installation

Where installation is made by engineers other than Brush Electrical Machines Ltd. personnel, the equipment should be erected by suitably qualified personnel in accordance with relevant legislation, regulations and accepted rules of the industry. In particular, the recommendations contained in the regulations with regard to the earthing must be rigorously followed.

1.2.5 Electrical Installation



IMPROPER USE OF ELECTRICAL EQUIPMENT IS HAZARDOUS

It is important to be aware that control unit terminals and components may be live to line and supply voltages

Before working on a unit, switch off and isolate it and all other equipment within the confines of the same control cubicle. Check that all earth connections are sound.

WARNING

Suitable signs should be prominently displayed, particularly on switches and isolators, and the necessary precautions taken to ensure that power is not inadvertently switched on to the equipment whist work is in progress, or is not yet completed.

Adjustment and fault finding on live equipment must be by qualified and authorised personnel only, and should be in accordance with the following rules:

- Read the Instruction Manual
- Use insulated meter probes
- Use an insulated screwdriver for potentiometer adjustment where a knob is not provided
- Wear non-conducting footwear
- Do not attempt to modify wiring
- Replace all protective covers, guards, etc. on completion

1.2.6 Operation and Maintenance

Engineers responsible for operation and maintenance of equipment supplied under this contract should familiarise themselves with the information contained in this manual and with the recommendations given by manufacturers of associated equipment. They should be familiar also with the relevant regulations in force.

- It is essential that all covers are in place and that all guards and/or safety fences to protect any exposed surfaces and/or pits are fitted before the machine is started
- All adjustments to the machine must be carried out whilst the machine is stationary and isolated from all electrical supplies. Replace all covers and/or safety fences before restarting the machine
- When maintenance is being carried out, suitable WARNING signs should be prominently displayed and the necessary precautions taken to ensure power is not inadvertently switched on to the equipment whilst work is in progress, or is not yet complete
- When power is restored to the equipment, personnel should not be allowed to work on auxiliary circuits, e.g. Heaters, temperature detectors, current transformers etc



Ear Protection

Suitable ear protection must be worn where continuous operating noise levels exceed 70 dB. For actual generator /turbine sound pressure levels, refer to the appropriate contract documentation.

1.2.7 Lifting Procedures

Ensure that the recommendations given in the manual are adhered to at all times.

1.2.8 Control of Substances Hazardous to Health (COSHH 1999)

The data provided in Section 1.2.9 and Appendix A satisfies the responsibilities detailed in the COSHH Regulations 1999, and includes details of substances commonly used on standard components supplied by Brush Electrical Machines Ltd. This data is not contract specific, and therefore may include substances not used on equipment detailed herein. Contract specific information can be obtained from BRUSH Aftermarket at the contract address shown on the back cover.

1.2.9 COSHH Data for Standard Components



ALWAYS USE SUBSTANCES IN ACCORDANCE WITH MANUFACTURER'S INSTRUCTIONS

If after applying the suggested first aid procedures, symptoms persist, seek immediate advice from qualified medical staff. Never induce vomiting, or give anything by mouth to an unconscious person.

COSHH data for substances used in standard components supplied by Brush Electrical Machines Ltd. are summarised in Appendix A.

1.2.10 Protection and Monitoring Devices



WARNING:

It is essential that any protection or monitoring device for use with generators or ancillary equipment should be connected and operational at all times unless specifically stated otherwise. It should not be assumed that all necessary protection and monitoring devices are supplied as part of Brush Electrical Machines Ltd. scope of supply.

Unless otherwise agreed, it is the responsibility of others to verify the correct operation of all protection and monitoring equipment, whether supplied by Brush Electrical Machines Ltd. or not. It is necessary to provide a secure environment that ensures operator safety and limits potential damage to the generator and ancillary equipment. If requested, Brush Electrical Machines Ltd. would be pleased to provide advice on any specific protection application issues or concerns.

1.3 EU Directives

The Machinery Directive is a European Community Directive dealing with safety of machinery. The purpose of the regulations is to ensure that machinery meets the relevant standards.

1.3.1 Declarations of Conformity

When installed in accordance with instructions defined in this manual, generator(s) will comply with the following EU directives:

- The appropriate standards of protection required by the European Community Machinery Directive 2006/42/EC
- The appropriate standards of protection required by the European Community Low Voltage Directive 2006/95/EC
- The appropriate standards of protection required by the European Community EMC Directive 2004/1 08/EC
- The applicable requirements of IEC 60034

Conformity certificates are included in the generator's quality dossier.

Certificates for associated first and third-party equipment are included in associated first and third-party manuals, where appropriate/available/required.

1.4 Operation and Maintenance Activities

During operation and maintenance activities it is important to remember that the generator must be kept clean and dry with suitable protection and by leaving the heaters on whenever it is safe to do so.

Reference should be made to operation and maintenance procedures contained in and relevant third-party supplier's datasheets, also supplied as part of contract specific documentation.

Drawings referenced in the following sections refer to those supplied in Volume 3. Reference should also be made to procedures contained in associated first and third-party equipment documentation.

Notice

Following major overhaul or an extended period of generator shutdown, prior to restarting consideration should be given to the use of temporary electric fan heaters (approximately 3kW type) if the frame heaters are not available. Combustion heaters (Paraffin, Kerosene and Calor Gas etc.) generate moisture and are not suitable.

Notice

When working on this equipment it is important that a safe environment is achieved i.e.

- **Isolate all electrical supplies, including anti-condensation heaters**
- **Ensure adequate ventilation and lighting**
- **Use proper support, lifting equipment and techniques for heavy items**
- **Maintain access ways**
- **Wear suitable protective clothing**

Safety guards and covers must be fitted, unless the equipment has been made safe behind the guard or cover.

On-site safety procedures are to be followed as appropriate, in particular 'Permit To Work' type systems are be followed rigorously.

Attention should be given to the advice given in Section 1.2 (Health and Safety Procedures) and Section 1.2.8 (Control of Substances Hazardous to Health (COSHH 1999)). Details of substances used on equipment that are potentially hazardous to health are detailed in Section 1.2.9 (COSHH Data for Standard Components).

IMPROPER USE OF ELECTRICAL EQUIPMENT IS HAZARDOUS.

1.5 Pipework Systems

To prevent leaks, it is important to check the tightness of connections in pipework systems particularly following installation, maintenance and overhaul operations.

Care should be taken to follow manufacturers' instructions (See Appendix D) when assembling/re-assembling pipework compression fittings, noting that it is recommended that where used, *Walterscheid* and *Hoke* fittings are lubricated in order to achieve a positive assembly.

2. General Description

2.1 General

The generator is an air-cooled cylindrical rotor machine suitable for base or peak load duty in accordance with the particulars given on the rating plate and the data sheets and curves in this handbook.

A brief summary of generator technical data is given in Volume 1.

2.2 Stator

The core is built into a fabricated steel frame and consists of low loss silicon steel segmental stampings insulated by a layer of varnish on both sides. It is clamped firmly between heavy plates, keyed in position under pressure. It is divided into short sections by radial ventilating ducts formed by fingers extending from the tip of each tooth to the back of the core, and welded to a thick stamping at one side of the duct. The stampings are held in line by dovetail keys bolted to the stator frame.

The stator winding is of the two layer diamond type with coils held in open slots by epoxy resin bakelised fabric wedges, the two layers having a similar separator. The coils are made in two halves, each half being fully formed before fitting in the stator. The insulation is synthetic resin bonded mica glass tape throughout, the slot portion being pressed hot to its final size. All current carrying joints in the windings are clipped and brazed.

The laminations of the stator winding are transposed in a regular pattern to minimise circulating currents and losses. The completed coils are protected against corona formation by conducting tape in the slot length and with corona relief tape at each end of the core.

In the end winding, the coils are braced with polyester cord synthetic resin bonded packing blocks and supported from the core ends by insulated brackets.

2.3 Rotor

The rotor consists of a solid alloy steel forging. The winding is held in slots by wedges. Slots in the teeth provide longitudinal air passages vented to the air gap by openings between wedges.

The winding consists of multi-turn coils of copper strip wound on edge. The end windings are supported by non-magnetic end caps shrunk on to a spigot on the rotor body, and braced with synthetic resin bonded packing blocks and finally boxed in with a steel ring.

Aluminium slot wedges linked at the ends by copper connectors are used to provide damping circuits to minimise the damaging effects of negative sequence currents.

Some rotors also have sub-slots, which provide additional cooling. The air is released through radial ducts formed in the coils. The rotor is only provided with sub-slots when the code for the machine frame size (suffix) contains the letter `R', see Volume 1 for details of machine frame size designation.

2.4 Internal Air Circuit

Air is drawn in at each end of the machine by shaft-mounted fans and divides between the rotor, the stator end windings and the air gap. It then passes through the radial ducts in the stator core and out through the stator frame. A small proportion of the cooling air is diverted to the main exciter.

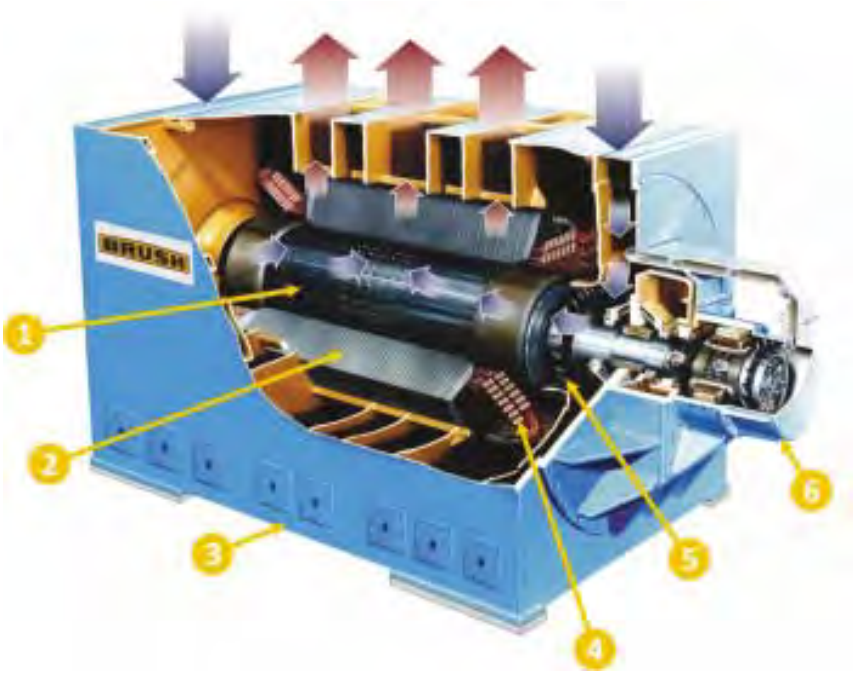

Figure 2-1 Typical Generator Internal Air Circuit

1. Rotor
2. Stator Core
3. Stator Frame
4. Stator Winding
5. Rotor Mounted Cooling Fan
6. Exciter

3. Generator Operation

3.1 General Instructions

This section provides general guidance on the operation of generators, particularly with reference to the principle of synchronising and parallel operation.

The generator must always be operated within the limits shown on the capability diagrams.

When running, readings of all significant parameters should be taken at regular intervals, say at least once every hour, and logged in a systematic way. Any irregularities must be investigated without delay and measures taken as necessary to avoid damage or serious malfunction. Systematic recording will help with long-term trend analysis during the life of the machine. This may identify deterioration and can be used to help prolong the life of the machine.

We recommend that the following parameters are measured and recorded as a minimum:

- Date
- Time
- Voltage
- Load current
- Bearing vibration
- Stator winding temperatures
- Cooling air temperatures
- Cooling water temperature (where applicable)

Any sudden increase in temperature or vibration must be accounted for and acted upon without delay.

When running for the first time at full load the power factor should be set at its rated value and the generator allowed to run in this condition at least until the stator winding temperatures have stabilised, taking readings as listed above. The main exciter field current should be compared with the specified design estimates and the temperatures and vibrations compared with the specified limits. These readings will provide the reference for checking future performance.

We recognise that for a variety of reasons some operators choose to run their machines on an alarm driven basis during which it is assumed that 'no alarm means no problem'. This alarm driven method is not recommended for the reliable detection of problems but if operators accept the risks of a reduced detection rate then we would initially recommend using the normal recommended alarm and trip settings given in Section 15.3.2, but with the following exceptions:

- Reduce the stator winding alarm setting to 130ºC for machines rated to the various International Standard Specifications, except the American Standards where the lower setting of 115ºC should be used
- We also recommend reducing the air outlet temperature alarm setting (See Section 15.3.2)
- With experience, the Customer may choose to modify his alarm settings but under no circumstances must the alarm and trip values exceed those given in Section 15.3.2

General Notice

Despite the apparent simplicity of the alarm driven method, *BRUSH Electrical Machines Ltd* continue to recommend the intelligent interpretation of historic records and trends. This provides the best assurance that current data represents a healthy situation.

3.2 Solo Operation

When operating singly the automatic voltage regulator is required to control the generator output voltage that should ideally be maintained constant irrespective of the load.

The controlled voltage is adjustable within a range of ±10% of nominal by means of a small rheostat connected to the AVR. However the generator should not be operated at voltages outside a range of ±5% of nominal at full rated load. If a drooping characteristic is provided for parallel operation it should be switched off for solo operation.

The governor of the prime mover controls the frequency. Ideally for solo operation the governor should be isochronous to maintain a constant speed at all loads. However, many governors provide a drooping characteristic (which is necessary for parallel operation) regardless of whether the generator is required for solo or parallel operation. If it is not possible to eliminate the drooping characteristic the speed should be set to provide the correct nominal frequency at the maximum sustained load at which the generator is required to operate. The frequency will then increase slightly (by up to 4%) as the load is reduced. The excitation should be left switched permanently on automatic control.

3.2.1 Starting Up

The procedure for starting up is as follows:

1. Check that the busbars are dead and in a fit state to be energised.
2. Rack generator circuit breaker into position ready for closing.
3. Start the prime mover and set to correct speed. Voltage should build up automatically as the speed increases. Adjust voltage if necessary to correct value.
4. Close generator circuit breaker. The busbars are now live and ready to receive load.

Following major overhaul or prolonged shutdown, reference should be made to the comments given in Volume 1.

3.2.2 Shutting Down

The procedure for shutting down is as follows:

1. Switch off load, or as much as possible, at source.
2. Trip the generator circuit breaker.
3. Stop prime mover.
4. If there is any possibility of the busbars being energised from another source or if the prime mover is required to run for purely mechanical reasons the generator circuit breaker (CB) should be withdrawn for isolation in the interests of safety. In the latter case the excitation should also be switched off.
5. If it is required to work on the generator copper-work with the busbars live the generator should be earthed down for security purposes.

3.3 Parallel Operation

3.3.1 kVAr Control

When operating in parallel with other generators or with an independent system the AVR is generally required to control the kVAr according to one of the following modes:

1. kVAr proportional to voltage deviation from the open circuit voltage setting (i.e. Quadrature Current Compensation - QCC).
2. kVAr proportional to kW (i.e. Power Factor control).
3. kVAr constant (i.e. kVAr control).

Prior to synchronising, the AVR is required to control the voltage. In all modes other than Item 1 this requires an auxiliary switch on the generator CB to change the mode from voltage to power factor or kVAr control.

It is not feasible to leave generators on pure voltage control after paralleling because the sharing of kVAr will be unstable. The simplest method of ensuring stable operation is to provide quadrature current compensation (QCC) which allows the voltage to droop slightly in proportion to the kVAr. The methods of providing kVAr control in various modes referred to above are described in detail in the AVR instructions. If the AVR fails, the excitation can be operated with supervision on hand control.

3.3.2 Speed Control

In addition to voltage droop it is also necessary to provide speed droop on the governor to ensure stable control of kW sharing. A droop of 4% from no load to full load is fairly typical for both speed and voltage.

3.3.3 Synchronising

Before a generator can be paralleled it must first be synchronised.

This is usually achieved with the help of a synchronising panel that provides a display of the magnitude and phase displacement of the voltages to be synchronised.

The generator voltage should first of all be adjusted to equality with the busbar voltage.

The correct condition for synchronising coincides with the marked position on the scale whilst rotating very slowly clockwise. This will ensure that the generator picks up a small positive load when synchronised, thus avoiding mal-operation of the reverse power relay. Ideally, the closing time of the circuit breaker should be anticipated by operating the "close" switch a fraction of a second before (rather than after) the pointer reaches its marked position. The overall error should not be allowed to exceed ±10°. A check synchronising relay may be provided to prevent the circuit breaker being closed unless above conditions are properly satisfied.

Alternatively, or additionally, an automatic synchronising relay may be provided to perform these operations automatically.

3.3.4 Load Application

After synchronising (See Section 3.3.3), the load may be applied as follows:

1. Slowly increase the speed setting of governor to bring the kW load up to the desired value. If the system capacity is relatively small it will be necessary to make compensating adjustments on the governor of the other prime movers to maintain the correct busbar frequency and load sharing.
2. If the AVR is operating on power factor (cosΦ) control, the kVAr should automatically increase in sympathy with the kW. If the AVR is operating on QCC or kVAr (I sinΦ) control, the kVAr should be slowly brought up to its correct value by means of the voltage setting rheostat or I sinΦ control respectively. With small systems on QCC control it is necessary to make compensating adjustments to the voltage settings on the other generators to maintain the correct busbar voltage and kVAr sharing.

3. If the voltage remains constant whilst operating on QCC control, the kVAr should remain constant at all loads. If the voltage drops, the generator will provide more kVAr, which helps to stabilise the busbar voltage.
4. It is not feasible to run a system with every generator on cosΦ or I sinΦ control because the load determines the overall system power factor.

Where the machine is fitted with a clutch, this would allow the generator to continue running as a synchronous compensator with the turbine shut down. To operate as a synchronous compensator the turbine generator unit must be run up and synchronised in the normal manner. The turbine can then be shut down. Sometimes the turbine has a small brake to stop it 'windmilling' and this should only be applied after the turbine has run down to a low speed and so minimise brake wear and heating. During synchronous compensation operation it is necessary to maintain the normal oil system and standby oil availability together with the normal cooling arrangements.

3.3.5 Shutting Down

If the total reserve capacity of the rest of the system comfortably exceeds the load on the outgoing generator the latter can be safely shut down without endangering the security of supply.

The procedure for shutting down the outgoing generator is as follows:

1. Gradually reduce the speed setting of the outgoing generator so as to shed the kW load, making compensating adjustments as and if necessary on other generators to maintain the correct frequency.
2. If the generator is operating on CosΦ control, its kVAr should have automatically dropped in sympathy with the kW. If the generator is operating on QCC or I sinΦ control, the kVAr should be gradually reduced to zero by means of the voltage setting rheostat or I sinΦ respectively.
3. When the current is as low as conveniently obtainable the circuit breaker should be tripped.
4. Shut down prime mover.
5. Rack down the generator circuit breaker.
6. If it is required to do work on the generator copper-work with the busbars live the generator should be earthed down for security purposes.

3.4 External Short Circuit

1. If the generator is accidentally subjected to an external short circuit, the circuit breaker should trip with the minimum delay, which should not exceed approximately 3 seconds. In most cases a permanent magnet generator provides the main exciter field current, and there will be sufficient excitation to sustain a short circuit current of approximately 2.5 times full load current. This will provide the current to operate the relay. When static excitation or statically derived excitation has been specified then short circuit clearance current is not available unless it was included in Customer specification.
2. Every possible precaution should be taken to avoid external short circuits as these severely stress both the stator windings and the mechanical fixings.

3.5 Long Term Shutdown

To ensure that the generator is maintained in good condition during long-term shutdown the machine must be kept clean, warm and dry. Oil should be flushed through the bearings for approximately half an hour every month to maintain an oil film on the bright metal

parts. The oil flushing could be more frequent if desired (say weekly) but periods between flushing should not exceed one month and the machine should be examined for signs of deterioration at regular intervals.

The frame heaters are adequate to maintain the temperature inside the machine above ambient and provided the generator is protected from the weather, and dust etc, its condition will be maintained. Sometimes rain or dust can blow back in through air exit louvres or access doors etc and these possible sources should be examined. Also the possibility of insects, small rodents, snakes or birds should not be overlooked and appropriate precautions taken. Checks should be made on a weekly or monthly basis to ensure that heaters are working, also inspect for signs of rust etc.

Water coolers, where fitted, need special consideration. If a glycol water mix is used the coolant need only be circulated for say half an hour every month. For most other coolers it will probably be safest to flush with clean fresh water. After flushing the cooler may be drained and dried using warm air if desired or it can be left full. It is not normally good practice to leave a cooler part full of water or to leave the cooler full of stagnant, acidic or salty water.

Prior to start up the machine should be given a good visual examination for signs of deterioration. Pay particular attention to oil and pipework gasketed joints. The stator winding should be 'meggered' with a 1000V *Megger* or 5000V *Megger* and the result compared with the table in Volume 1.

4. Heaters

4.1 Technical Data

General Notice

Loading data etc. will vary for alternative local supply voltages, please refer to the heater wiring diagram or auxiliary terminal box diagram in Volume 3.

4.2 Location and Access

The locations of heaters are shown in the drawings (See Volume 3).

Access plates to the generator heaters, mounted at the ends of the stator, are provided.

Main exciter heaters, mounted between poles at the bottom of the main exciter, are accessible by removing the main exciter endframe.

4.3 Connection

Heater connection details are given in the drawings (See Volume 3).

As soon as possible after the set arrives at the site, the heaters should be connected to a suitable supply by means of the terminals provided in one of the junction boxes (see diagram in lid of box). The purpose of the heaters is to prevent condensation of moisture on the windings and metal which could lead to low insulation resistance or corrosion.

WARNING:

It is the responsibility of the person energising the heaters for the first time to ensure that they are not covered with temporary packing etc. (thus presenting a fire hazard). He must also ensure that leads temporarily disconnected at shipping breaks are made safe before energising the heaters. During storage and erection, the heaters should remain energised whenever it is safe to do so.

4.4 During Shutdown

The heaters should always be energised when the machine is not in service.

4.5 High Voltage Testing

Elements are high voltage tested to earth at the makers' works at 2000V ac when cold and after assembly in our equipment at 1500V ac when cold.

5. Rotating Rectifier Assembly

5.1 Twelve Diode Assemblies

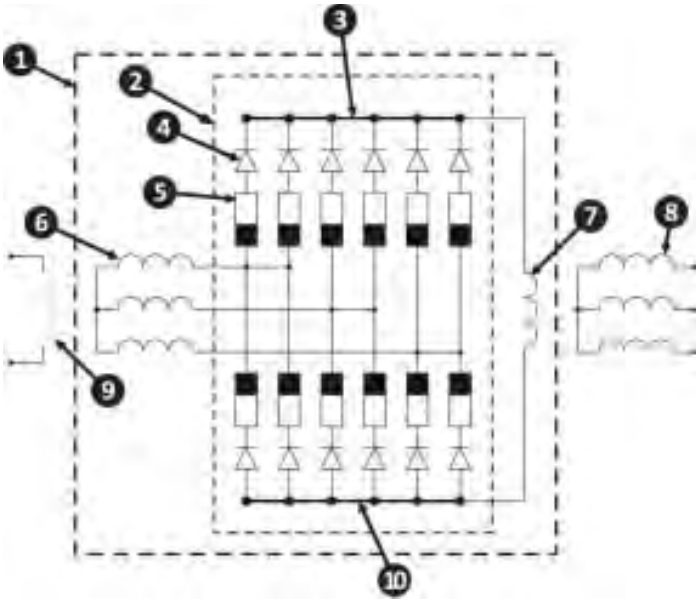

Figure 5-1 Rotating Rectifier Assembly (12 Diode)

1. Rotor
2. Rectifier assembly
3. Positive heat sink
4. Silicon diode
5. Fuse
6. Exciter armature winding
7. Generator field winding
8. Generator stator winding
9. Exciter field winding
10. Negative heat sink

Twelve diodes, each with a fuse in series, are mounted in parallel pairs in a three-phase bridge.

Six of the positive diodes are mounted on one heatsink, and six negative diodes are mounted on another heatsink.

The risk of diode failure is very remote. However, if a diode does break down, a heavy reverse current will flow which is interrupted by the fuse. The adjacent diode and fuse would then be called upon to carry the whole current that was previously divided between two parallel paths. Each path is designed with sufficient surplus capacity to carry the full

current continuously. The generator will therefore continue running as if nothing had happened.

If the more heavily loaded diode should subsequently fail, its fuse will blow, thus isolating the faulty arm completely. Again the generator can continue operating, but in this case a ripple is induced in the main exciter field current which is detected by the diode failure indicator unit.

In this event, the set should be shutdown at the earliest opportunity so that the failed diodes and blown fuses can be located and replaced.

5.2 Diode and Fuse Replacement

5.2.1 General

Notice

A torque wrench should be used to tighten components to the torque settings stated on the rectifier assembly drawing.

Where specified on the rectifier assembly drawing, the contact areas of diodes and heatsinks should be cleaned before the application of BX13 PT compound as described in Section 5.6, prior to fitting.

Prior to reassembly of any current carrying bolted joints, the contact surfaces should be cleaned before the application of a light even covering of *Unial* compound as described in Section 5.7.

Replace all removed locking plates with new items.

5.2.2 Diode Replacement (Stud Anode/Cathode Types)

Notice

Do not apply a turning force to any part of the diode, other than through the diode fixing tool.

Ensure that correct diode polarity is maintained by using the appropriate diode.

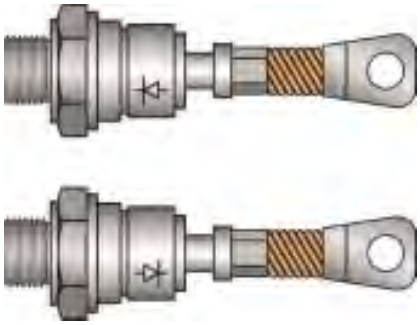

Figure 5-2 Typical Stud Anode/Cathode Diode Types

With the machine at standstill:

1. Remove the exciter covers to gain access to the rotating rectifier assembly.
2. Locate the failed diode(s) using a low voltage continuity checker.
3. Remove the diode tail retaining screws of the failed diode.

4. Use the diode fixing tool to undo and remove the failed diode, taking care not to damage the heatsink.
5. Apply the conducting compound specified in the rectifier assembly drawing to the contact areas of the heatsink and the replacement diode. Position the diode on the contact area of the heatsink immediately and use the diode fixing tool to secure the replacement diode.
6. Fix and secure the diode tail.
7. Replace the exciter covers and secure.

5.2.3 Fuse Replacement

With the machine at standstill:

1. Remove the exciter covers to gain access to the rotating rectifier assembly.
2. Locate the failed fuse(s) using a low voltage continuity checker.
3. Undo the retaining screw(s) and remove the failed fuse, taking care not to damage the heatsink.
4. Fit the new fuse and apply the conducting compound specified in the rectifier assembly drawing, and secure.
5. Replace the exciter covers and secure.

5.3 Preparation of Contact Surfaces

Before a device is mounted an aluminium heatsink, the contact area of the heatsink should be prepared in the following manner:

5.3.1 Capsule and Stud Fixing Devices with Nut Retention

1. A small amount of *BX13PT* compound should be applied to the contact area of the heatsink.
2. The *BX13PT* compound should then be scrubbed into the contact area using a wire brush. This action produces a 'slurry'.
3. Remove the 'slurry' using a clean rag or tissue.
4. Apply a thin film of *BX13PT* compound to the face of the device and then position the device on the contact area of the heatsink immediately. Do not attempt to mount more than one device at a time.
5. Where a locating pin is used, ensure that the device is accurately located upon the pin. Ensure that the pin projects from the heatsink less than the depth of the hole in the device.
6. When mounting a capsule device on surfaces other than aluminium, e.g. plated copper, ensure that the contact area of the heatsink is clean and apply a thin film of *BX13PT* compound to the contact face of the **device only** before mounting.
7. Ensure that threads are clean and free from *BX13PT* compound.

5.3.2 Stud Fixing Device Screwed into a Threaded Hole in a Heatsink

1. Follow instructions 1 to 3 above.
2. Apply a thin film of *BX13PT* compound to the contact face of the device before mounting.
3. Ensure that the threads are clean and free of *BX13PT* compound.

5.4 Bolted Electrical Joints



Substance Hazard

Because of its chromate content, *Unial* has a very slight toxicity. Handled carefully it has no harmful effects on the skin. It should not, however, be allowed to enter open cuts and sores. It can easily be removed from the skin with a cloth moistened in paraffin or white spirit. The protection given by barrier creams on hands is desirable.

1. Ensure surfaces are flat and free from burrs at the edge of holes, also that they are free from oil, paint or grease.
2. Coat the contact faces with a light even application of *Unial* compound.
3. Close the joint and evenly tighten bolts.
4. Ensure that a film of *Unial* is retained at the edges of aluminium to copper or Cuponal joints to prevent bi-metallic action.

6. Bearings, Shaft Seals and Lubrication Oil System

6.1 General

The generator incorporates pressure lubricated bearings. An orifice in the supply line controls the bearing oil flow.

The bearings are sealed with air taken from the generator fans by means of knife edge seals.

Drain oil discharges into the bottom of the bearing housing from where it is returned to the lubricating oil system via a drainpipe. The bearings are sealed with air taken from the generator fans and the oil drainpipe is therefore also used to remove air from the bearing. There must be free passage for this air to flow either above the oil, in the case of a continuously sloping drain, or via a separate system in the case of drowned drains. The air drain should be maintained at, or below, atmospheric pressure.

Lubrication oil system, bearings and shaft seal arrangements are illustrated in the drawings (Volume 3).

6.2 Lubrication Oil System

6.2.1 Technical Data

Lubrication oil flows and pressures are detailed in the drawings (See Volume 3).

For oil inlet temperature alarm/trip settings see Section 15.3.2.

6.2.2 Bearing Oil Supply

Generally the recommended bearing oil supply is a good quality ISO VG32 or ISO VG46 turbine lubricating oil (See Sections 19.1 and 19.2.

Before starting the unit a check should be made to ensure an adequate oil supply is available, that there is sufficient oil in external tanks, and that the supply and shut down systems are fully functioning.

It is recommended that the generator be shut down as soon as possible following loss of oil supply.

Routine inspections should be made for oil leakage from all visible joints in the pipework and bearings on a regular basis, say once a week and the oil level in the tank similarly monitored for signs of oil loss.

Joints not readily accessible during normal operation should be examined for signs of leaking as and when they become available e.g. during shut-downs.

While it is undesirable to operate with an oil leak there are no materials within the generator that are damaged by the direct action of oil. However, prolonged running with an oil leak is not recommended because oil moistened surfaces are a dirt trap and a protracted and difficult cleaning operation may result.

If the machine is at standstill for prolonged periods, circulate the lubricating oil for a minimum of half an hour every month in order to prevent rusting.

6.2.3 Shaft Driven Oil Pump

The generator is provided with a shaft driven oil pump fitted to the main exciter end, as illustrated on the General Arrangement drawing.

Further information on pump operation and maintenance is given in the following Third-party equipment information included with this document set.

6.2.4 Bearing Oil Drain System

It is important to note that both the oil and seal air need to be removed from the bearing housing. Care must be taken in the design of the oil drain system to ensure that the pipe bends, elbows, tee pieces and drops do not inadvertently cause the pipe to become blocked to air by obstructions such as 'U' traps, swirling oil, vortices etc.

6.2.5 Emergency Run-Down Lube Oil System

Where emergency lube oil run-down tanks are fitted, the tanks must always be kept full so that in the event of loss of pressure, oil will continue to be supplied to the bearings during the emergency shut down sequence.

6.2.6 Bearing Jacking Oil System

Bearing jacking oil is required during periods of prolonged running of the generator at low speeds (typically below 20 rpm) and maintenance operations in order to minimise generator bearing wear, and where required to reduce the shaft system breakaway torque.

6.3 Bearings

6.3.1 Definitions

The main exciter end bearing is often abbreviated to the EE bearing, and is sometimes referred to as non-drive end or NDE bearing.

The non-main exciter end bearing is often abbreviated to the NEE bearing, and is sometimes referred to as drive end or DE bearing.

6.3.2 Bearing Parameters

Bearing details are given in Volume 1.

Reference should also be made to the drawings and Quality Dossier for further details.

6.3.3 Bearing Dismantling and Re-Assembly

See Sections 8 and 9 for dismantling and re-assembly procedures.

6.4 Bearing Seals

Pressurised oil seals are mounted on the inboard and outboard faces of the bearing housing. These each incorporate two chambers as shown in the following diagram. The outer chamber is supplied with pressurised air bled from the downstream side of the main generator fan. This prevents the oil and oil vapour from flowing along the shaft and out of the bearing housing.

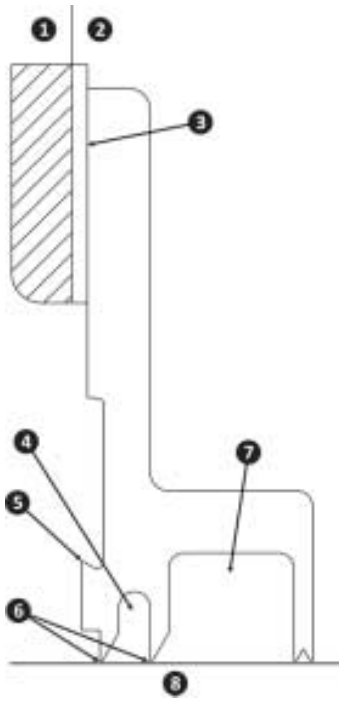

Figure 7-1 Cross-Section of Pressurised Oil Seal

1. Main Bearing Cavity
2. Air Side
3. Oil tight gasketed joint face
4. Intermediate annulus with a small drain hole at bottom to prevent build up of stagnant oil accumulated during start-up
5. Lip to prevent large quantities of oil flooding down seal face
6. Small running clearance with high velocity air lifting oil off the shaft and returning it to the main bearing cavity
7. Annulus containing air from the main fan with a small drain at bottom to prevent build up of stagnant oil accumulated during start-up
8. Shaft

During assembly of the machine every care is taken to ensure that all joint faces are oil tight before the machine is despatched from the works. Horizontal joint faces are sealed with *Hylomar* jointing compound and all other joint faces are gasketed.

Check for oil leakage at convenient intervals throughout the operating life of the machine (for recommended intervals (See Section 19.5). The presence of oil can be attributed to one of the following conditions:

- Pressurised air supply tubes disconnected.
- Omission of *Hylomar* jointing compound at seal joint face.
- Poor bearing drain ventilation.

7. Dismantling Bearings/Shaft Seals

7.1 General

WARNING:

Before commencing work on the unit, ensure all necessary safety precautions have been carried out. Provide safe access and isolate both the machine and the lubrication system.

For reliable performance, maintain a high standard of cleanliness when carrying out any work on the bearings. The interior of the bearing housing and all passageways and pipework, especially on the supply side, must be kept scrupulously clean.

The bearing bore is machined to a fine tolerance and should not be scraped, except locally for the rectification of minor mechanical damage or slight scoring of the white metal surface. Any hard, embedded particles should be carefully picked out with a sharpened spike and any raised metal removed.

7.2 Procedure

1. Any components removed from the unit should be match marked and stored in a safe area with all machined surfaces protected from damage.
2. Remove any attachments from the bearing cap, e.g. Vibration probes or seismic vibration transducers and the jacking oil flexible connections.
3. On machines fitted with split type coupling guard supports, remove the top half of the support. For machines fitted with a solid type coupling guard support, remove the complete support and temporarily relocate the support on the rotor shaft away from the endframe cover, lifting or securing as necessary to ensure that the support does not damage or rest on the rotor shaft surface.
4. Remove the top half-endframe/pedestal cover. Take care not to damage outboard seal pressurisation hose.
5. Disconnect seal pressurisation hoses.
6. Remove shaft seal half-joint bolts, dowels and the screws securing the shaft seal to the bearing cap.
7. Lift off both top half-shaft seals. Take care not to damage the seal knife-edges. **Note**: Seals are insulated from the bearing housing.
8. Remove bearing housing cap bolts and withdraw dowels.
9. Lift off the bearing housing cap. Use jacking screws to aid separation.
10. Proceed in line with the following instructions as appropriate.

7.3 Fixed Profile Spherically Seated Bearings

1. Remove bearing bush top half-joint bolts and undo the oil feed flexible pipe connection. Lift the top half-bearing bush clear. Take care not to damage bearing white metal surfaces, oil feed flexible piping, rotor journal or vibration probe track.
2. Remove the temperature sensor from the bottom half bush. (It may be necessary to remove the outboard bottom half seal to improve access).
3. Lift the rotor shaft not more than 0.25mm using a suitable jack capable of lifting at least half the rotor weight (refer to the machine general arrangement drawing.
4. Rotate the bottom half bush around the journal until it is possible to fit an eyebolt into the tapped hole in the spherical seat.

5. Using suitable lifting equipment, continue rotating the bottom half bush until it is positioned on top of the journal and is free to lift off.

7.4 Thrust Pads

1. To remove thrust pads, remove the top-half bearing bush.
2. With the bottom-half bearing in position, rotate the whole thrust bearing so that the split line is horizontal, remove the top portion and rotate the bottom portion to retrieve the pads.
3. Disconnect temperature detector leads if necessary.

8. Assembly and Alignment of Bearing/Shaft Seals

8.1 General

WARNING:

Before commencing work on the unit, ensure all necessary safety precautions have been carried out. Provide safe access and isolate both the machine and the lubrication system.

For reliable performance, maintain a high standard of cleanliness when carrying out any work on the bearings. The interior of the bearing housing and all passageways and pipework, especially on the supply side, must be kept scrupulously clean.

There is a popular misconception that spherically seated bearings are self-aligning - they are not!

It is necessary therefore to carefully align the bearing bushes with the bearing journals as the rotor is lowered into the bearings. The following procedure will always obtain the necessary accuracy providing that the surface condition of the bush spherical and the bearing housing will allow free movement. Poor machining dents or distortions may prevent this alignment process from succeeding. The checks at the end of the procedure should show if there is a problem in this area. A visual check should be carried out.

Notice

When flexible hose pipes have been fitted, ensure that they have been properly tightened, do not come into contact with external surfaces, and that no twisting or torsion stresses exist in the hose pipes. Whenever the bearing caps are removed during servicing, check that the flexible hosepipes are still secure.

Refer to the drawings and Section 19.3 for recommended torque wrench settings for metric screws.

Assembly is the reverse of dismantling (See Section 8 with the following additional procedures:

1. Clean all joint faces of the bearing housing cap and shaft seal halves using a non-metallic scraper, lint-free cloth and suitable solvent such as *Pronatur* (orange oil).
2. Examine and clean inside the sump and bearing bush. Ensure that all machined surfaces are free from burrs.

WARNING:

Special care should be taken when relocating solid type coupling guard supports to ensure that the support does not damage the rotor shaft.

8.2 Fixed Profile Spherically Seated Bearings

Take care not to damage the vibration probe tracks during this operation.

The spherically seated bearing bush is not self-aligning and should be assembled as follows:

1. Pour a small quantity of clean turbine oil onto the bearing journal and the spherical seat so that the bearing bush can slide easily on assembly. Rotate the bottom half bush into position using eyebolts and lifting tackle as appropriate.
2. Lower the rotor bearing journals into the bearings.

3. Check that the rotor is in its correct axial position. This position will depend on the requirements. On machine assembly at our works, positioning was achieved to contract requirements.
4. Take the weight of the rotor at one of the bearings preferably with a jack (or a crane when accurate inching is possible) until the bush can be just pushed in a circumferential direction. Rotate the bush about 10° in both directions a couple of times (adjustment can be achieved by tapping with a soft mallet).
5. Re-centre the bearing and lower the journal back onto the bush.
6. Check the side clearances (at the horns) between the bush and the journal, entering the feeler gauge to the same depth (approximately 25mm) in each position. Maximum diagonal difference should be 0.025mm (0.001 inches). **Record these figures**.
7. Check the clearance between the top half bearing bush and the journal by placing short pieces of lead wire axially, one at each end of the loaded white metal area. Fit the top half bush tightening all bolts and check the resulting lead thickness with a micrometer. The maximum difference allowed is 0.025mm (0.001 inches) to Quality Control Sheet for `Heavy Duty' sleeve bearings. This tolerance is too wide for short bearing bushes and the target should be 0.015mm (0.0005 inches) for effective bush lengths of less than 110mm. Note that smaller diameter leads may be needed on bearings less than 150mm in diameter. **Record these figures**.
8. Repeat steps 4 to 7 until satisfactory results are achieved.
9. **Note**: If the tolerances in 6 and 7 cannot be achieved, then there may be a problem with the spherical seating between the bearing bush and the housing.
10. Fit Anti-Rotation Key. Ensure that the anti-rotation key locates in the recess provided.
11. Refit the bearing temperature detectors.

8.3 Thrust Pads

Take care not to damage the vibration probe tracks during this operation.

Proceed as follows:

1. Support the rotor shaft at the non-main exciter end. Remove the inboard and outboard seals and non-main exciter end bearing bush. Place the bearing bush on a flat surface with the bore in a vertical plane. Assemble the top and bottom half bearing bush and tighten the joint bolts.
2. Fit the manifold blocks to the bottom half bearing bush.
3. Fit the flexible hose that connects the manifolds.
4. Fit the flexible hoses into the manifolds.
5. Check that the blanking plugs are fitted to the manifolds.
6. Fit the thrust bearing carrier halves to recess in the bearing bush, ensuring correct alignment of match marks. Tighten the socket head screws.
7. Turn the bearing assembly over ensuring that the thrust pads rest on a suitable soft surface which will not damage the white metal surface. Fit the top half thrust bearing carrier halves in accordance with 6 above.
8. Connect the flexible hoses from the manifolds to the appropriate thrust pads.
9. Fit the oil wiper to both inboard and outboard thrust pad carriers using spacers and the socket head screws, do not tighten the screws yet (See 14)
10. Apply a light coating of oil to all white-metal, journal, thrust face surfaces and spherical seating. Carefully lower the bottom half bearing bush onto the journal ensuring that the thrust pads locate inside the thrust faces of the rotor. Turn the bush

into the correct position. Check the position of the oil hole. Check that the anti-rotation key locates in the recess provided in the endframe. Lower the shaft onto the bearing. If problems are encountered at this stage, it may be necessary to jack the rotor axially to correctly align the bearing bush and endframe spherical seatings.

Ensure that the jacking oil flexible hoses from the manifolds to the thrust pads do not become trapped or damaged in anyway (i.e. develop kinks) when the bottom half bearing bush is being rotated around the journal into its position in the bottom of the bearing housing.

11. Check the bearing bush alignment to the journal **and record the journal bearing and thrust bearing clearances**. Fit the top half bearing bush and tighten the joint bolts.
12. Check that the jacking oil supply to the main journal is securely connected.
13. Set the wiper to be 0.05mm clear of the shaft at the bottom and an equal clearance at both sides. Tighten and lock the screws using thread locking adhesive.
14. Fit the oil deflector to the top half oil wiper at both inboard and outboard locations. Lock the socket head screws using thread locking adhesive.
15. Fit temperature detectors (when supplied).
16. Complete the bearing and seal assembly in accordance with Section 9.5.

8.4 Final Bearing Assembly

8.4.1 Insulated Bearing Bush

In the case of an insulated bearing bush, check and record the insulation resistance using a 500V *Megger* (this should be at least 10kΩ). Do this either by isolating the shaft from earth or inserting an insulation film between the bush and shaft.

8.4.2 Bottom Half Shaft Seal

1. If the bottom half-shaft seal has been removed, refit using a new gasket. Gaskets must be the same thickness and equivalent material as the original gasket.
2. Lightly tighten-up the bottom half-shaft seal onto the end frame. The shaft seals are insulated by means of tubes and washers fitted to the screws. Take care not to crack these insulation pieces.
3. The insulation resistance should be checked at each stage of assembly. To aid insulation checking, a thin insulating film can be placed between the shaft and seal
4. Set clearances in accordance with the bearing seal setting drawing. Tighten progressively.
5. Refer to Volume 1 `Bearing Insulation Test' for additional information, and for when machines have insulated bearings at both ends. Some machines may have test wires fitted (Customer request) and these are brought out to the bearing housing terminal box.
6. For seal setting details see Shaft Seal Setting drawing.

8.4.3 Bearing Seal Setting Clearances Diagram (Machine Stopped)

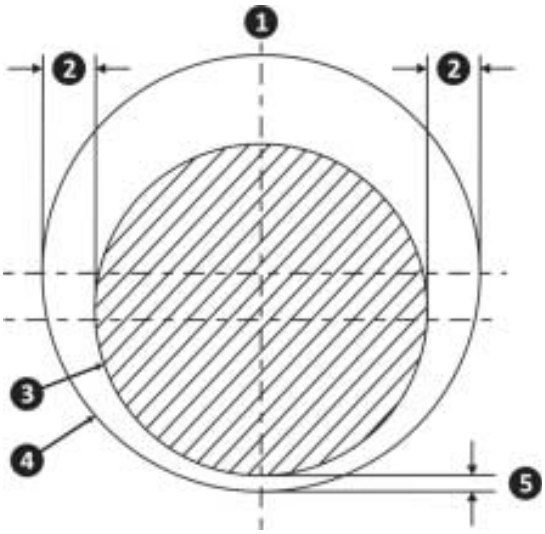

Figure 9-1 Bearing Seal Clearance Setting

1. Top
2. Horizontal clearances are to be approximately equal
3. Shaft outside diameter
4. Seal inside diameter
5. For this measurement , refer to the bearing seal setting drawing supplied with the contract documentation

8.4.4 Refit Bearing Cap

7. Ensure that all horizontal joint faces are clean and free from oil, apply *Hylomar* compound to horizontal joint faces and refit the bearing cap, locating the dowels prior to tightening bolts.
8. In addition if a new bearing bush has been fitted, it is necessary to check the fit of the bearing bush in the endframe/pedestal, as follows:
   a. Fit and tighten the bearing cap and check the gap in the spherical between the top of the bearing bush and bearing cap using feeler gauges. The top gap should be between 0.08 and 0.25mm for 457mm diameter sphericals, and between 0.10 and 0.30mm for nominal 520, 630 or 820mm diameter sphericals.
   b. The gap should be proportionally less at other positions around the spherical below the top. For example, on insulated bearings with five pads and no pad on the top dead centre, the gap behind the upper two pads at their centre lines should be 80% of the top clearance figures.
   c. **Record the new top clearance figure** for future reference.

8.4.5 Fit Top Half Shaft Seal

1. Using a new gasket on the vertical face and *Hylomar* compound on the horizontal joint face, carefully lower the top half shaft seal into place.
2. As the shaft seal carrier is pulled into place, fit horizontal split joint dowels and fully tighten all screws. Pay particular attention to the intersection of the vertical and horizontal joints ensuring that an oil-tight seal is achieved.
3. Check seal insulation resistance in the cases of insulated seals. This should be at least 10kΩ.

8.4.6 Pressurisation Hoses

1. Replace seal pressurisation hoses and ensure full airflow without restrictions.
2. Replace top half endframe (endframe machines) and remaining seal pressurisation hose joints.
3. When the bearing cap is removed for examination of the bearing journals, it is important that the horizontal screws securing the top half oil catches to the bearing caps on vertical faces are removed **before** removing the bearing cap. This will prevent damage to the vertical gasket.

8.4.7 Circulation of Oil through Bearings

1. If new bearings have been fitted, run the machine for the first time at progressively increasing speeds, checking that there are no abnormal noises such as rubbing, clicking, knocking or scraping. Any such noises must be fully investigated.
2. Check that the shaft is running in the correct axial position as indicated by the position flag, allowing for thermal expansion of prime mover. (This does not apply in cases where there is a local thrust bearing).
3. Monitor the bearing temperature for excessive heating.
4. Monitor the main exciter end bearing bush insulation if a test lead is fitted (See Section 11.2).
5. After a period of 6 hours running check for oil leakage. The presence of an oil leak can be attributed to one of the following conditions:
   - Seal pressurised air supply tubes disconnected.
   - Omission of/or excessive *Hylomar* jointing compound at seal joint face.
   - Poor bearing drain ventilation.

Similar inspection should be made at convenient intervals throughout the operating life of the machine. (For recommended intervals see Section 19.5).

Notice

Gaskets and sealant such as *Hylomar* tend to settle, bed or relax after a short time, therefore bolted joints containing gaskets and sealant must be re-tightened one hour after first tightening. If significant relaxation has occurred, then the re-tightening process should be repeated one hour later.

8.4.8 Removal of Bearing RTD Probes

The bearing RTD temperature probes comprise two sections, the probe element itself, which fits into the bearing bush, and the body that includes the probe terminals.

A flexible cable links the two sections and it is this cable that is easily damaged by use of an incorrect removal/installation method. The correct method is as follows:

1. Remove the top half-bearing cap, the top half-bearing bush and the oil ring.
2. Disconnect the external electrical connections at the temperature probe junction box.
3. Undo the gland nut on the probe stem where it enters the bearing housing, and loosen the gland body from the bearing housing to the point that it can be removed entirely by fingers. Partially withdraw the probe body to ensure that it cannot contact the probe as the bearing bust is rotated.
4. Jack up the shaft, taking care to lift it truly vertically to enable the bearing bush to be easily rotated.
5. Ensure that the probe body will not contact the connection end of the probe and rotate the bearing bush to bring the RTD probe up near the horizontal centre line. Loosen the probe from the bearing bush with a small spanner, ensuring that the probe is not turned by more than about half a turn, otherwise cable damage will occur. Rotate the bearing bush back into position.
6. Support the probe body and remove the gland body from the bearing bush. If the RTD probe is not `finger loose' in the bearing bush, then rotate the probe body to unwind the twist in the cable, plus half a turn, and refit the gland body and probe body into the bearing bush. Repeat from 5 above as many times as is necessary to obtain the RTD probe loose in the bearing bush.
7. When the RTD probe is free in the bearing bush, then rotate the bearing bush until the end of the RTD probe is in line with the hole in the bearing housing and the probe body. With the probe body supported and the gland body removed from the bearing bush, put the cable between the RTD probe and body in light tension and rotate the whole assembly. The RTD probe will unscrew from the bearing bush and the assembly can be lifted away.

9. Cooling System

9.1 Air Cooling System

The stator and rotor are cooled by means of air forced around the generator by means of fans mounted on the rotor shaft.

The generator receives filtered air from an external air treatment unit. The filters must be properly maintained so that the total pressure drop external to the generator taking into account all ducting, filters (maximum dirty pressure drop), silencers, louvres etc., at the inlet and outlet, must not exceed the specified system design pressure drop.

A differential pressure switch is connected across the filter to give a signal to warn the machine operator when renewal of the filter pads is necessary. It is recommended, but not essential, that the machine is shut down to change the filter pads. Further information on these items can be found in third-party equipment information included with this document set.

10. Rotor

10.1 Rotor End Cap

The rotor end caps fitted on this machine are of the non-magnetic, 18/18 Mn Cr type.

As the incidence of failure is low, we do not suggest any special maintenance procedures, but the resulting damage is so extensive that the risk must be taken very seriously. So we do advise that non-destructive tests should be carried out during the life of the machine, and visual checks made as the opportunity arises - see Section 19.5. For further information contact BRUSH Aftermarket (See back cover for contact details).

10.2 Protection Against Shaft Voltages and Bearing Currents

Current flowing across the oil film in a bearing or between the teeth in a gearbox can lead to the destruction of the bearing or gear teeth by arc erosion in a comparatively short time. Brush Electrical Machines Ltd. have identified this problem, and have eliminated it by:

- Insulating one shaft end.
- Earthing the shaft with a high copper content graphite brush.
- By using a brushless excitation system.

As an aid to standardisation and Customer satisfaction, all Brush Electrical Machines Ltd. DAX generators have both bearings insulated. The main exciter end bearing earth link wire should be left disconnected (bearing bush insulated) and the turbine end bearing earth link connected (bearing bush uninsulated).

There are several possible sources of shaft voltage that can produce bearing currents; these are brought together into two broad groups:

1. Those that can produce relatively high currents (which fortunately are at relatively low voltages).
   a. To counteract the effects of the shaft voltages in this group, we insulate and isolate one end of the shaft from earth, effectively breaking the current path.
   b. The insulation fitted gives a minimum value of 10kΩ at the break.
2. Those that can produce relatively high voltages.
   a. The mechanisms that produce relatively high voltage are electrostatic or capacitive in nature. The accumulation of electrostatic charges, if left undischarged, would cause a voltage build-up and flash over. We fit a high copper content graphite earthing brush to discharge accumulations of static charge from the rotor shaft. The high copper content present in this type of copper/graphite brush helps to prevent glazing problems that can occur if standard graphite brushes are used at very low current densities associated with static electric charges.
   b. On machines that have sliprings and static excitation systems, an additional rotor earthing brush should be fitted.

10.3 Rotor Earthing Brush

To ensure the correct operation of the earthing brush assembly, the brush, brush holder and rotor track must be kept clean and free from grease and other contaminates. The rotor track will need to be mechanically and chemically cleaned to ensure good contact. The brush holder must allow the brush to move freely.

Every six months:

- Check the spring clip is securely in position and does not impede brush travel
- Remove any/all dust accumulation
- Clean rotor track

Important Notice

Where no fire wall between the turbine and the generator exists, the frequency of inspections should be increased.

The rotor earthing brush should be changed when it has worn to approximately 14mm long.

10.4 Rotor Withdrawal

10.4.1 General

Removal of the rotor is an operation which may need to be carried out at some time during the life of the machine, but is not a normal installation or maintenance requirement. However, it is sometimes necessary to remove the rotor in order to carry out certain major inspection and repair tasks. BRUSH Aftermarket (See back cover for contact details) will be pleased to advise on this requirement.

It is important to remember that the machine must be kept clean and dry with suitable protection; the heaters should be energised whenever it is safe to do so. Consideration should be given to the use of temporary electric fan heaters (approximately 3kW type) if the generator stator heaters are not available. Combustion heaters (paraffin, kerosene, butane, etc.) generate moisture and are not suitable.

10.4.2 Precautions

- It is important that a safe environment is achieved by isolating electrical supplies and providing adequate ventilation, suitable protective clothing, proper support for heavy items, etc.
- On no account must the rotor rest on the end-caps (retaining rings).
- The rotor must be protected against damage by slings or jacks.
- Take care to prevent damage to the vibration monitoring tracks and bearing surfaces on the rotor shaft.
- Protect exposed stator windings, taking the necessary steps to prevent the rotor, and rotor removal tackle from touching the stator winding.
- Ensure that the 'skid' surfaces are well cleaned.

10.4.3 Site Requirements

In addition to the rotor removal equipment kit, the following equipment is also required at site:

- All round access to the generator, noting that it may be necessary to 'skew' the rotor on removal.
- Adequate wires, slings, hooks and shackles.
- Protective material to prevent lifting slings or supports from damaging the rotor surface.
- Packing between the skid plate and the stepped end of core.
- Temporary support for the rotor cradle.
- Rope for removal of the rotor skid block.

10.4.4 Procedure

Where supplied, project specific rotor removal drawings should be used in place of the general guidelines detailed hereafter. Where no project specific information is provided we recommend that BRUSH Aftermarket be contacted for advice (See back cover for contact details).

10.4.5 Using Overhead Crane

The general procedure used to remove the rotor using a stable, preferably gantry type, overhead crane that has been certified to lift the full rotor weight, is as follows:

1. Ensure that the pole faces are in the vertical plane before commencing this procedure.
2. Uncouple the generator shaft from the drive. For double end drive machines, uncouple the generator shaft from both drive ends, and it will be necessary to manoeuvre the generator into a position which will allow the rotor to be removed. This will entail one or combinations of the following:
3. Sliding the generator sideways between the drive units.
4. Removing the driver or gearbox at one end.
5. Skewing the generator.
6. Remove the following items where applicable; wiring and conduit, main exciter and air ducts, generator end covers, main exciter endcovers, rotating rectifier rings, main exciter frame, oil pipes to bearings, generator bearing seals and units coupled to shaft ends.
7. Support the shaft and remove the bearings using frame mounted lifting brackets, slings, and shaft collars.
8. Insert the skid plate which should be waxed or greased on the top face and the core protection plate.
9. Lower the non-main exciter end bearing housing and endframe.
10. Fit the skid carriage assembly to the non-main exciter end.
11. Position the skid blocks, ensuring that they are under the rotor body, close to, but not under the end caps (retaining rings), take care to protect the windings.
12. Lower the rotor to the skid blocks.
13. Fit the adapter plate and eye bolt at the non-main exciter end of the shaft.
14. Withdraw the rotor axially using the overhead crane and pulling equipment from the eye bolt simultaneously. When the centre of gravity of the rotor extends past the stator frame, support the rotor using adequate blocking. Then re-sling for the final stage of removal.
15. Withdraw the rotor from the stator bore and, taking precaution for its weight, set it down on 'V' blocks or other supporting arrangement.
16. Wrap the poles of the permanent magnet pilot exciter to protect against iron debris and keep iron and steel objects at a distance.
17. Ensure that the rotor is protected adequately against any situation which may arise as a result of the removal.

10.4.6 Without Overhead Crane

The general procedure used to remove the rotor without the use of an overhead crane, is as follows:

1. Ensure that the pole faces are in the vertical plane before commencing this procedure.
2. Uncouple the generator shaft from the drive. For double end drive machines, uncouple the generator shaft from both drive ends, and it will be necessary to manoeuvre the generator into a position which will allow the rotor to be removed. This will entail one or combinations of the following:
3. Sliding the generator sideways between the drive units.
4. Removing the driver or gearbox at one end.
5. Skewing the generator.
6. Remove the following items where applicable; wiring and conduit, main exciter and air ducts, generator end covers, main exciter endcovers, rotating rectifier rings, main exciter frame, oil pipes to bearings, generator bearing seals and units coupled to shaft ends.
7. Support the shaft by using the frame mounted lifting brackets, slings, and shaft collars. Then remove the bearing bushes using frame mounted lifting brackets, slings and shaft collars.
8. Insert the skid plate which should be greased on the top face and the core protection plate.
9. Lower the non-main exciter end bearing endframe.
10. Fit the skid carriage assembly to the non-main exciter end.
11. Position the skid blocks, ensuring that they are under the rotor body, close to, but not under the end caps (retaining rings), take care to protect the windings.
12. Lower the rotor to the skid blocks and remove wire slings.
13. Fit the eye bolt pulling adapter to the main exciter end of shaft. Take care to use suitable protection for the bearing journal.
14. Remove the rotor axially until the rotor skid block nears the main exciter end of the stator core, then support the rotor with a sling at the main exciter end.
15. Assemble the rail track, trolley and packing underneath the rotor cradle/pull adapter.
16. Transfer the support from the forward skid block to the cradle using slings to support the rotor. Then remove the forward skid block.
17. Allow the rotor weight to be taken up by the remaining skid block and rotor cradle.
18. Remove the rotor until the skid carriage foot just enters the stator bore.
19. Transfer the support from the skid block to the skid carriage, then remove the second skid block. To facilitate this transfer the slope of shaft may be changed by jacking and adding shims under the cradle at shaft journal.
20. Remove the rotor until the skid carriage foot approaches the main exciter end of the core. Place the rotor body cradle under the rotor by temporarily jacking the rotor until the cradle can be positioned. The jacking point is to be as near to the main exciter end of the rotor body as possible, but under no circumstance must the rotor be jacked on the rotor end caps.
21. Remove rotor from stator until suitably positioned for handling.
22. When a single sling is to be used to lift the rotor on the centre of gravity after removal, extra care should be taken not to damage the rotor.
23. Wrap the poles of the permanent magnet pilot exciter to protect against iron debris and keep iron and steel objects at a distance.

24. Ensure that the rotor is protected adequately against any situation which may arise as a result of the removal.

10.5 Rotor Threading Procedure

Reverse of procedure detailed in Section 11.4.

The following should be checked (Refer to Section 9 and Volume 1):

1. Bearing insulation.
2. Coupling alignment
3. Alignment of bottom half bearing bushes, using of feeler gauges inserted between the bearing and shaft (both sides at each end) - before fitting the top half of the bearings.
4. Seal settings.

In addition generator and main exciter fan tip and air gap clearances should be checked (See Section 11.6, below).

10.6 Fan Tip and Air Gap Clearances

Where the rotor has to be threaded into the stator, or following partial rotor removal, generator and main exciter fan tip and air gap clearances should be checked. Factory settings for fan tip and air gap clearances and minimum values are recorded in the Contract Quality Dossier.

If fan tip clearances are outside the tolerance band, remove the split pins (cotter pins) and undo the bolts to allow the fan shroud to be adjusted. It is recommended that previously used fan shroud split pins are replaced.

Following confirmation of satisfactory fan tip clearances, ensure that the slotted nuts are tightened in accordance with instructions, and ensure that replacement split pins are securely located and bent to fit the slot nut. Damaged split pins should be replaced.

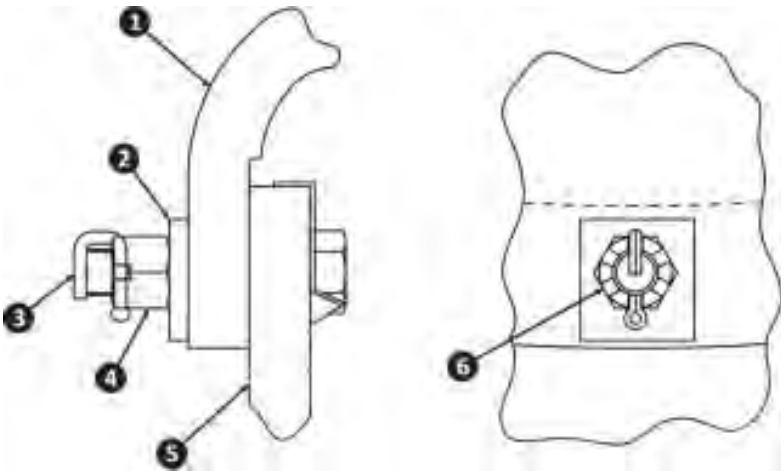

Figure 11-1 Typical Fan Shroud Locking Arrangement

1. Fan shroud
2. Washer

3. Split pin
4. Slotted nut
5. Winding cover
6. After torque tightening, slotted nuts are also to be turned further to line up with hole in screw as required

10.7 Rotor Transportation

If the removed rotor is required to be transported, it is necessary to ensure that the rotor is supported in the best possible position to avoid damage due to axial or lateral movement. In addition, the rotor must be fully protected against damage caused by both exposure to adverse climatic conditions and the abrasive effect of wire ropes or slings. In general, a wooden packing case will be required for long duration journeys. For short journeys a tarpaulin can be used as a covering after the rotor has been protected as detailed hereafter.

All exposed bare metal sections of the rotor shaft ends, such as bearing journals, thrust collars, proximity probe tracks and couplings, are to be given a protective coating of *Shell 'Ensis TX'* fluid or a suitable grade of heavy grease. In addition, the bearing journals and proximity probe tracks are to be wrapped with polyester film, which should be taped in position.

Preferably, the rotor should then be sealed in a seet bag (a heavy duty plastic bag with a metal foil barrier) or similar enclosure. For transportation by sea, this type of packing should always be used. For long term storage the seet bag should contain silica gel desiccant and a visible litmus humidity indicator, or similar. If a seet bag or similar enclosure is not available, both ends of the shaft, including, when applicable, the main exciter armature and the pilot exciter magnet, should be completely wrapped with heavy gauge polythene sheet, taped as necessary to seal against the ingress of moisture and other contaminants, and silica gel bags should be included inside the wrapping, with openings in the rotor body taped over with brightly coloured adhesive tape.

Two suitably constructed wooden cradle blocks are needed to securely support the rotor within the box or on the vehicle platform or trailer. These should be profiled to suit the outside diameter of the centre body section of the rotor. The blocks must be positioned approximately 100mm - 150mm from each rotor endcap (See diagram) and the rotor arranged with the poles in the top and bottom positions such that the weight is taken on the solid steel pole section and not on the winding slot area.

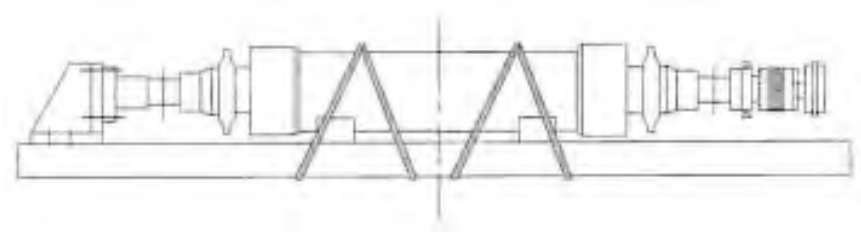

Figure 11-2 Rotor Transportation Supports

To prevent any possible axial movement of the rotor, a suitably constructed axial restraint device is needed. This device must be integral with the transportation box and sufficiently robust to prevent distortion under the shock conditions associated with rapid deceleration. The rotor should be attached to the restraint structure by bolts passing

through the holes in the rotor coupling flange. These bolts must be protected with soft steel washers to prevent damage to the coupling face.

The rotor must be firmly lashed down inside the box and to the vehicle to prevent any possible movement in transit. This should be achieved using wire ropes or webbing straps with suitable tensioning devices. Chains should not be employed as these are difficult to tension correctly. The lashing should only be applied over the centre body section of the rotor; on no account must the ropes bear on the shaft ends or the rotor endcaps. Damage to the rotor body surface can be avoided by the use of hard protective sheet material under the wire ropes.

When the transport contractor is completely satisfied that the rotor is secure (in the case of a boxed rotor, it must be ensured that the rotor is secure in its box and that the box is secure), it should be completely sheeted over with a waterproof tarpaulin or plastic sheeting. The sheeting must be firmly tied down all round to prevent contamination of the rotor from adverse climatic conditions.

Notice

For road and sea transport, in addition to the normal force of gravity, 'g' forces of up to 1g in any direction can be expected. For rail transport, very much higher forces can be experienced and the advice of the Railway Company should always be sought.

10.8 Rotor Balancing

The field balancing of generator rotors is a specialist subject and should not be attempted unless the specialist knowledge of Modal Balancing techniques is available. Brush Electrical Machines Ltd. have specialist engineers available should there be a need to re-balance the rotor.

Before attempting to adjust the balance weights, a careful record should be made of the balance weights and their axial and angular positions so that the original balance conditions can be restored. This record should be made for each balance plane that it is proposed to disturb.

Notice

Record the original condition of the balance weight BEFORE **adjustment.**

Balance weight planes exist on the rectifier fan of brushless machines (or on the sliprings of slipring machines) on each fan, on the outboard end of each end cap, and on the rotor body.

Screwed-plug type balance weights should be screwed flush with the rotor surface and locked by peening into the screwdriver slot or small, semi-circular grooves (the slot or grooves being at approximately 45° to any major axis).

Dovetail type balance weights should have the grub screw tightened with a hexagonal wrench and then be secured by peening, to lock both the grub screw and the edges of the dovetail groove, to prevent circumferential slippage.

Report any weight changes made to BRUSH Aftermarket (See back cover for contact details).

General Notice

Additional balance weight planes can be made available by the judicious adjustment of the coupling bolt weights if required.

Notice

All dovetail balance weight grooves have limits to the quantity of weights that should be fitted for continued component stability. As a general rule, no more than 3 additional weights should be fitted in the end caps, and 5 in other balance planes without first getting the approval of the Brush Electrical Machines Ltd.

11. Cleaning

11.1 Cleaning a Seriously Contaminated Machine

The windings of all electrical machines will suffer from very rapid deterioration if energised in the presence of conductive contamination e.g. salt water, carbon dust etc. Consideration should be given to the removal of a seriously contaminated machine from service in order to clean the windings and core.

The machine and its enclosure are designed to minimise the possibility of the cooling ducts and passages becoming blocked with dirt. However, if the cooling performance has been seriously affected by the accumulation of dirt, then the machine should be cleaned (another option is to consider completely rewinding the machine).

Before cleaning a seriously contaminated machine it is usually necessary to remove the rotor in accordance with the instructions in Section 11.4.

During the cleaning operation it is essential that:

- All components are protected from the damaging effects of the weather, e.g. dust, rain, moisture etc
- Care is always taken to ensure that contaminants are not moved into more inaccessible areas
- If solvents are used then the area concerned must always be well ventilated

The choice of cleaning method will depend upon the level of contamination, accessibility and availability of cleaning equipment.



WARNING:

During the cleaning operation it is important that a safe working environment is achieved, eg. isolate electrical supplies including heaters, provide adequate ventilation, wear suitable protective clothing, use proper support for heavy items etc.

11.2 Cleaning By Hand (Preferred Method)

Clean readily accessible surfaces by hand using an industrial vacuum cleaner, lint free cloth, brushes and, if necessary, aided by the sparing use of a solvent (e.g. *Pronatur* (Orange Oil) or equivalent). Any solvent used must be proven non-damaging by conducting a small trial on an easily repaired section of the winding. The winding materials must not soften or be affected in any way.

Loosen accumulated dirt by using rags, brushes, blunt hooks, scrapers, strips of insulation material, wood, and probes etc. The probes are best manufactured locally from pieces of wire of between 0.7mm and 4mm diameter (carefully radius the cut ends). Pull-throughs are sometimes found useful for use on long ducts, as are bottle brushes. Take care not to damage the machine surface below the dirt layer.

If a suitable working area and protective clothing, masks, goggles etc. are available, then dust and dirt may be removed using clean, dry, low pressure compressed air (1.5 - 2 Bar g). When considering the use of compressed air, please remember that many contaminants form dangerous, even toxic, airborne particles.

Always scrape the dirt towards an easily accessible area for removal, never poke it deeper into the machine or allow it to fall into an inaccessible area. Suck the loosened dirt away using a high powered industrial vacuum cleaner. Account for all scrapers etc. before re-assembling the machine.

Important Notice

When cleaning the rotor it is important that the same final condition is achieved on either side of a diameter so as to preserve the balance.

11.3 CO_2 (Dry Ice) Shot Blasting

The sparing use of specialist CO_2 (dry ice) shot blast equipment using CO_2 shot blast pellets can be used where contaminants are stubborn and difficult to remove. Dry ice cleaning should be performed in conjunction with hand cleaning and only used when dry hand cleaning becomes difficult.

11.4 Water Washing

Water washing of generators can have a detrimental effect on electrical insulation materials and is therefore not recommended.

11.5 Post Insulators and Similar Surfaces

Wiping with cloths moistened with mild soapy water should clean these.

When clean, wipe the soapy water away with a cloth moistened with clean fresh water preferably de-ionised.

12. Fire Fighting Equipment

12.1 Sources of Fire in Generators

The main source of fire in generators is an electrical fault on the rotor or stator winding, causing local overheating and subsequent ignition of insulation materials.

Experience has shown that the damage from such a cause is very local and, once the fault is detected and isolated by the protection system, the fire is self extinguished.

Another potential hazard is ignition of oil in liquid or vapour form.

Experience is such that the risk of fire propagation is low, but should be considered in relation to the effects of fire in the following areas:

- Inside the generator casing
- Inside the bearing housing
- Inside the immediate enclosure or canopy

Experience has shown that the most likely scenario is oil starvation causing bearing overheating.

These fires will be detected by local temperature indication and contained within the bearing housing. Propagation to an uncontained fire is extremely unlikely. These usually require two failures: a leakage and an ignition source. Likelihood of this is also low.

In respect of the above, it is considered that the residual risks to personnel safety have been mitigated sufficiently by assessment, and that no additional protection layers should normally prove necessary.

If further equipment protection is required to limit damage, it is recommended that consideration be given to the provision of the appropriate fire protection equipment including detectors, alarm systems, and gas or water extinguishing systems.

It is also recommended that consideration be given to the monitoring of the oil flow and/or pressure to the generator to prevent oil starvation.

12.2 Generator Fire Protection Equipment

Generator fire protection equipment, if any, to deal with the above hazards is illustrated on the drawings.

Additional fire fighting equipment can be quoted on request.

13. Instrumentation

13.1 Resistance Temperature Detectors (RTD's) and Thermocouples

13.1.1 General

Resistance temperature detectors (RTD's) or thermocouples are fitted to the generator to monitor temperatures in the various parts of the machine. These detectors, or if specified separate temperature switches (thermostats), are commonly used to initiate trip and alarm functions. The location of these devices are illustrated on the drawings as found in Volume 3 (Drawings).

Further information on these devices can be found in Third-party equipment information included with this document set.

13.1.2 Recommended Alarm and Trip Settings

Table 15-1 Recommended Alarm Trip Settings

Parameter	Alarm	Trip
Stator Winding Temperature (°C)	150	160
Bearing Oil Outlet Temperature (°C)	87	90
Radial Bearing Metal Temperature (°C)	92	95
Thrust Bearing Metal Temperature (°C)	105	110
Main Exciter Air Outlet Temperature (°C)	105	-
Generator Air Outlet Temperature (°C)	105	-

13.1.3 Resistance Temperature Detectors

Temperature detectors of the resistance type comprise an element with a non-inductively wound platinum coil having a value of 100Ω at 0°C. Operation of the detector is based on the principle that the resistance of a metallic conductor varies linearly with temperature.

Three leads are brought out of the machine from each detector, two from one end and one from the other. In this way the detector can be connected to a Wheatstone Bridge resistance measuring circuit, so that variations in lead resistance do not affect the bridge reading of detector resistance.

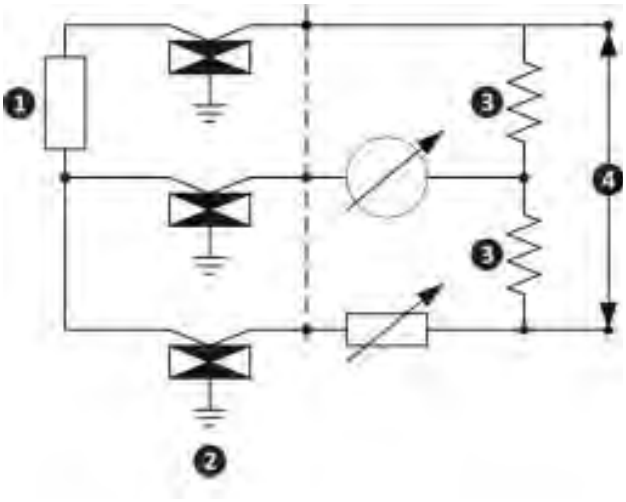

Figure 15-1 Three-wire RTD Measuring Instrument Circuit Diagram

1. Resistance temperature detector
2. Overvoltage protection device
3. Resistor
4. DC supply

13.1.4 Overvoltage Protection

The RTD's embedded in the stator winding are protected against potentially lethal voltage build-up using overvoltage protection devices built into the *Klippon* terminals. To operate successfully, one side of the protection device must be connected to earth and the other connected to the RTD lead (achieved as it passes through the terminal block).

RTD's located in other parts of the machine do not have overvoltage protection devices fitted.

13.1.5 RTD Calibration

Tables of RTD calibration data (resistance versus temperature) can be found in Third-party equipment information included with this document set.

13.1.6 Removal of Bearing RTD Probes

See Section 9.5.9.

13.2 Vibration Detectors

13.2.1 Proximity Vibration Detectors

Non-contacting, shaft mounted equipment relies on accurately machined, diamond cut tracks on the rotor. These tracks must remain damage-free to allow the probe to give a true reading of shaft position within the bearing oil film.

To gain a true motion of the shaft it is usual to place two probes at 90° to each other on each bearing. The probe signals are sent via signal conditioners, mounted locally to the probes, to the remote monitoring equipment.

Non-contacting shaft motion proximity equipment is usually supplied as part of an overall vibration monitoring package and comes complete with its own instruction manual. The probes require setting-up in accordance with the supplier's manual and Section 15.4.5 hereafter.

Recommended settings are as follows:

Table 15-2 Recommended Vibration Detector Settings (BEM Design)

Parameter	Alarm	Trip
Shaft Relative Vibration#, Peak To Peak (µm [inches])	100 [0.004]	150 [0.006]
# If vibration is measured in terms of amplitude: Zero To Peak Amplitude (µm) = (Peak Velocity (mm/s) x 9550)/rpm		

13.2.2 Supplier Data

Further information on these devices can be found in Third-party equipment information included with this document set.

13.2.3 Fitting A Key Phasor Probe

Before attempting to install a key phasor probe ensure that the key phasor target (slot or hole) is not below the probe position. Once this check has been carried out, then the procedure detailed in Section 15.4.5 can be followed.

13.2.4 Fitting of Shaft Probes

1. Great care must be taken when fitting the probes not to damage the fragile tips. Even moderate contact can damage the probe tip or more seriously, the specially prepared track on the shaft.
2. Withdraw the probe stem from the body of the probe housing.
3. Screw the body of the probe holder into the bearing housing.
4. Begin to insert the probe stem into the body using finger pressure **ONLY** to gently screw the stem into the body (do not use any undue force). If the stem is tight in the body, remove it and clean out the threads.
5. Connect-up the extension cable to the probe lead and connect a dc voltmeter to the output of the proximitor as before. A reading of about 22V should be obtained.
6. Continue inserting the probe into the body frequently checking the gap until a voltage between 8.5V and 9.5V is obtained. You will need to disconnect the lead periodically to stop it `winding up'. Lock the probe stem into position.

13.2.5 Probe Calibration Verification

1. Remove the *Bentley Nevada* probe from the stem of the holder and fit the *Bently Nevada* probe into the calibration fixture.
2. Wire-up the proximitor to a 24V-dc supply, making sure that the positive of the supply is connected to the common terminal and the negative to the supply terminal.
3. Connect the *Bently Nevada* lead to the proximitor and the probe. Connect a voltmeter across the common (+ve) and the output (-ve) of the proximitor. With the probe clear of the micrometer target, a voltage of approximately 22V dc should be measured.
4. Bring the micrometer target into gentle contact with the probe tip. A voltage of about 0.7V should be indicated.

5. Gradually withdraw the micrometer target in 0.010-inch steps and record the indicated voltage, up to a maximum gap of 0.100 inches.
6. Record the data on the Brush Electrical Machines Ltd. Quality Control Sheet.
7. Divide the voltage change by the gap change over the range 0.040 to 0.060 inches.
8. The result will be the probe sensitivity over its linear range and should be in the range 190 to 210 mV/0.001 inches.

13.3 Air Filter Pressure Differential Transmitters

Air filter pressure differential transmitters are fitted across the filter. Further information on these devices can be found in Third-party equipment information included with this document set.

14. Fault Finding

Symptom	Probable Cause	Corrective Action
Generator Fails To Excite	When in AVR control (OK on hand control)	Check AVR and associated connections. Refer to AVR manual.
	No main exciter field current (when in Hand or Auto modes)	Check main exciter field circuit back to permanent magnet generator.
	High main exciter field current	Check resistance of main generator field and armature phases. If faulty, refer to works. If not, check diodes and fuses in rotating rectifier (See Section 5).
Excessive Voltage Output	Voltage sensor to AVR Fault	Check that sensing voltage is reaching AVR. If so, check AVR referring to the AVR manual.
Fluctuating Output Voltage	When in AVR control (OK on hand control)	Refer to AVR manual.
	When in Hand or Auto operating modes	Unless caused by other machines on the system, this is probably due to speed fluctuation of the prime mover.
Diode Failure Indicator Lights Up	Diode failure	See Section 5.
Stator Winding Overheating	Generator output and power factor outside limits	Ensure that output and power factors are within the limits shown on the output curve. If they are, check cooler or filters
Vibration Alarm	Responds immediately to generator excitation	Indicative of shorted turns on rotor. Refer to works.
	Does not respond to generator excitation or load	Check tightness of holding down bolts and shims. Check alignment. Check balance. Check for rubbing fan guides/air baffles etc.
	Vibration increases gradually	Check change of alignment from cold to hot.
Bearing Overheating	Low lubrication oil pressure Oil filter blockage	Check oil supply pressure at bearing. Check condition of oil filters. Check bearing bush for mis-alignment or wiping.

15. Recycling

15.1 Introduction

Brush generators and ancillary equipment are designed, manufactured and packaged to have limited environmental impact. The following comments detail considerations and recommendations for the environmentally friendly re-use, recycling or disposal of packaging, operational materials, and ultimately the generator itself at the end of its design/useful life.

General Notice

It is the Customers responsibility to ensure the procedures used for the disposal and recycling of materials is in compliance with local regulations.

15.2 Packaging

Our aim is to limit the amount of packaging to the minimum required to maintain the necessary levels of security and safety during transit and storage.

Where required, generators are protected for long term storage by means of an hermetically sealed bag ('seet' bag) The sealed generator is then enclosed in a wooden packing case to protect the bag against accidental damage. Generally, wooden packaging material is either heat treated or fumigated, and marked in accordance with the 'International Standards for Phytosanitary Measures (ISPM)' Publication No.15 entitled 'Guidelines for Regulating Wood Packaging Material in International Trade'.

Plastic coverings and 'seet' bags, which comprise a non-woven polyester layer and a thin (typically 12µm thick) aluminium foil with low density polyethylene (LDPE) coatings (typically 45-80µm thick), can be recycled in accordance with local regulations.

The following methods are recommended for the disposal of wood packaging material:

- Burning (Recommended if the wood is found to be infected with pests)
- Burial (landfill)
- Chipping

Any wood packaging material that is recycled, remanufactured or repaired should be treated, re-certified and re-marked in accordance with ISPM Publication No.15.

Substance Hazard

Silica gel is placed in 'seet' bags, and is sometimes included in bearing sumps, oil drain pipework etc. to maintain a dry atmosphere, should be disposed as hazardous waste. Place the material in a plastic bag or container and dispose in accordance with local regulations.

Cloths used to remove *Shell 'Ensis' TX* rust inhibitor used to protect exposed metal surfaces, should be treated as a hazardous waste **and should be disposed in accordance with local regulations.**

Other packaging materials used to protect the equipment during transit can be disposed or recycled in accordance with local regulations.

15.3 Operational Materials

Substance Hazard

Contaminated oil from the generator lubrication oil system, which may initially include traces of *'Vactra 4'* rust inhibitor, is a hazardous waste **and should be recycled or disposed in accordance with local regulations.**

Failed components that are non-reusable, e.g. fuses, bulbs, certain types of filter etc., should be disposed of in the correct manner, or recycled in accordance with local regulations.

Materials, including cloths etc., used for maintenance and cleaning should be disposed of in the correct manner, or recycled in accordance with local regulations.

15.4 Generator

When the generator has reached the end of its useful/design life, it is often possible to re-use certain major components such as the stator and core, rotor etc., along with new parts such as rotor and stator coils etc., to refurbish the generator to provide a machine that is efficient and reliable. BRUSH Aftermarket would be pleased to provide information and advice at the appropriate time.

If it necessary to dispose of the machine, the approximate material content used in the construction of the generator is as follows:

- Steel: 75 - 85 %
- Copper: 10 - 15 %
- Cast iron: 1 - 2 %
- Aluminium: 0 - 2 %
- Plastic, insulation materials etc: 1 - 5 %
- Stainless steel: 1 - 5%
- Other: less than 1 %

General Hazard

Dismantling the generator is a basic procedure, however care needs to be exercised due to the heavy weight of individual components.

The generator stator frame and covers are made of structural steel, which can be recycled in accordance with local regulations. Auxiliary equipment, including bearings, heaters and cables etc. which contain non-steel components, should be removed prior to commencement of the recycling process.

The rotor shaft and endcaps (retaining rings) are manufactured from a chrome/molybdenum steel alloy. Main rotor slot wedges are aluminium, and smaller (interslot) wedges are steel. Stator slot wedges are manufactured from either steel or a high density epoxy bonded insulation material.

Windings and other heavy current carrying components are normally manufactured using high conductivity copper. Rotor windings are generally bare or varnished copper, but stator windings are usually covered with insulation materials. Some insulation materials can be removed by mechanical means and, subject to local regulations, is suitable as landfill waste. Due to the manufacturing process, other insulation may require heat treatment in order to remove.

Substance Hazard

Where a heat treatment process is used to recover the copper, care must be taken to ensure that the oven used is fitted with an after-burner capable of keeping gaseous (O_x, CO_x, NO_x and C_xH_x) and other microscopic particle emissions to a minimum in accordance with local regulations.

16. Reference Data

16.1 Lubricating Oils (ISO VG32)

Lubricant for use in generators must be a premium quality petroleum based fluid, having excellent oxidation stability, excellent protection against wear and rust formation, good demulsibility and good resistance to foaming. The chemical and physical properties of oils and a list of approved oils is detailed hereafter.

To determine the suitability of oils from the approved list, first establish the lowest expected ambient temperature to which the machine will be subjected, and the pour point for the oil should be at least 10°C below this figure. If the ambient is below -20°C, oil with a high viscosity index of at least 140 should be used. Check the operating range of the oil selected relative to the site maximum and minimum ambient temperatures.

16.1.1 Chemical and Physical Properties of Oils

Table 19-1 Oil Properties (VG32)

API Gravity at 15.5°C (60°F):	30 to 33
Viscosity Index for ambient above -20°C:	90 minimum
Viscosity Index ambient below -20°C:	140 minimum
Viscosity:	ISO VG32
Colour ASTM:	2.0 maximum
Flash Point. COC:	160°C (320°F) minimum
Rust Test ASTM:	Pass
Pour Point:	See Table below
Neutralisation No:	0.2 max desired
Mg KOH/g oil:	1.6 Absolute Limit

16.1.2 Approved List of Oils

Brush Electrical Machines Ltd. recommend the following ISO VG.32 oils for use with generators, although others may be used. Contact our Engineering Dept. for possible use of other oils.

The information provided is based on the respective oil companies' specifications. Whilst every effort is made to maintain this data up to date, the oil companies reserve the right to review their specifications periodically. Specifications can also vary with the point of manufacture, it is therefore essential, and a Customer responsibility, to verify the suitability of the oil selected against the specification with the local oil supplier before purchasing oil for the initial fill or for any subsequent oil replacement.

Table 19-2 Approved Oils (ISO VG32)

Oil Manufacturer	Grade	Pour Point
BP	Energol T HB 32	-12°C
BP	Energol S HF32	-36°C
Caltex	Regal R and O.32	-18°C
Castrol	Perfecto T32	-12°C
Chevron	GST ISO 32	-33°C
CITGO	Pacemaker T.32	-32°C
Conoco	HYD SP32	-24°C
Esso	Teresso 32	-12°C
Esso	Nuto H 32	-30°C
Mobil	DTE Light	-24°C (UK), -7°C (USA)
Mobil	DTE 10 EXCEL 32	-54°C
Mobil	DTE 13 and DTE 13M	-39°C
Mobil	DTE 724 and DTE 797	-12°C
Petro-Canada	Super Turboflo 32	-30°C (FZG 4)
Petrobas	Marbrax T.R32	-18°C
Shell	Tellus T.32	-51°C
Shell	Turbo T.32	-6°C
Shell	Turbo CC.32	-12°C
Texaco	Regal R and 0.32	-30°C
Total	Azolla ZS32	-21°C

16.2 Lubricating Oils (ISO VG46)

Lubricant for use in generators must be a premium quality petroleum based fluid, having excellent oxidation stability, excellent protection against wear and rust formation, good demulsibility and good resistance to foaming. The chemical and physical properties of oils and a list of approved oils is detailed below.

To determine the suitability of oils from the approved list, first establish the lowest expected ambient temperature to which the machine will be subjected, and the pour point for the oil should be at least 10°C below this figure. If the ambient is below 4°C, oil with a high viscosity index of at least 100 should be used. Check the operating range of the oil selected relative to the site maximum and minimum ambient temperatures.

16.2.1 Chemical and Physical Properties of Esso Teresso 46

Table 19-3 Oil Properties (VG46)

Specific Gravity at 15.5°C (60°F):	0.868
Viscosity cSt at 40°C:	45.3
Viscosity cSt at 100°C:	7.0
Viscosity cSt at 0°C:	508
Viscosity Index:	110 minimum
Viscosity Grade:	ISO VG46
Colour ASTM:	2.0 maximum
Flash Point (Open):	234°C (453°F) minimum
Rust Test ASTM:	Pass
Pour Point:	See table below
Neutralisation No:	0.2 max desired
Mg KOH/g oil:	1.6 Absolute Limit

16.2.2 Approved List of Oils

Brush Electrical Machines Ltd.. recommend the following ISO VG.46 oils for use with generators, although others may be used. Contact our Engineering Dept. for possible use of other oils.

The information provided is based on the respective oil companies' specifications. Whilst every effort is made to maintain this data up to date, the oil companies reserve the right to review their specifications periodically. Specifications can also vary with the point of manufacture, it is therefore essential, and a Customer responsibility, to verify the suitability of the oil selected against the specification with the local oil supplier before purchasing oil for the initial fill or for any subsequent oil replacement.

Table 19-4 Approved Oils (ISO VG46)

Oil Manufacturer	Grade	Pour Point
BP	Energol T HB 46	-12°C
BP	Energol S HF46	-36°C
Caltex	Regal R and O.46	-18°C
Castrol	Perfecto T46	-12°C
Chevron	GST ISO 46	-27°C
CITGO	Pacemaker T.46	-32°C
Conoco	HYD SP46	-27°C
Esso	Teresso 46	-10°C
Esso	Nuto H 46	-30°C
Mobil	DTE Medium	-6°C(UK), -7°C(USA)
Mobil	DTE 15 and DTE 15M	-39°C
Petrobas	Marbrax T.R46	-18°C
Shell	Tellus T.46	-51°C
Shell	Turbo T.46	-6°C
Shell	Turbo CC.46	-12°C
Texaco	Regal R and 0.46	-27°C

16.3 Torque Wrench Settings for Metric Screws

All machines use steel ISO metric coarse thread fasteners to British Standards 4168 for socket head and 3692 for hexagon head bolts, screws and nuts. `Screw Size' indicates the metric type by the letter `M' and the number shows the diameter in millimetres.

Important Notice

It is important to note that table is given as a guide only, and documents and drawings may detail other torque settings for particular applications.

Table 19-5 Metric Screw Torque Wrench Settings

	Socket Head		Hexagon Head		Screw Torque	
	HT STEEL		HT STEEL		COPPER JOINTS	
Screw Size	Nm	lbf.ft	Nm	lbf.ft	Nm	lbf.ft
M3	2.1	1.5				
M4	4.7	3.5				
M5	9.5	7.0	5.6	4.1		
M6	16	12	9.5	7.0	7.2	5.3
M8	40	30	23	17	17	12.5
M10	80	60	47	35	28	21
M12	135	100	80	60	45	33
M16	340	250	200	150	91	67
M20	660	490	390	290	135	99
M24	1150	860	690	510		
M30	2350	1750	1400	1050		
M36	4100	3000	2450	1800		
M42			4000	2950		
M48			6000	4400		
M56			9800	7200		
M64			14500	10500		

The torque figures assume that screws must turn freely in the threads and with minimum lubrication. The above torque figures only apply to bolt/screws which are identified as ISO metric by either of the symbols `ISOM' or `M' embossed or indented on top of the head together with the grade designation 8.8 or 12.9 for socket head screws. Refer to BS 6104 Pt 1 Table 3 for nominal or minimum tensile strength.

General Notes

Steel: These torque figures also only apply when the tapped holes to receive the bolts/screws are in HT steel or equivalent strength material, equal to the standard steel hexagon nut.

Aluminium: The values for Hexagon Head HT steel also apply to Aluminium when screw thread inserts have been fitted.

Copper: These torque figures apply at copper joints when HT steel fastenings are used.

New gaskets and sealant such as *Hylomar* tend to settle, bed or relax after a short time so new bolted joints containing gaskets or sealant should be re-tightened approximately one hour after first tightening.

16.4 Hexagon Headed Bolts and Nuts Utilisation Chart

Generators incorporate ISO metric coarse threads up to 68mm diameter. Basic dimensions and limits are to BS:3643 Part 2, Tables 4 and 5. Conduit metric threads are to BS:4568 and ISO 423.

Important Notice
Metric tools must be used

Table 19-6 Metric Equivalent Spanner Sizing Chart (continued overleaf)

	Equivalent Spanner Sizes			
Jaw Gap (In)	Inch	Metric	Bsf	Whitworth
0.250	1/4" AF			
0.275		7mm AF		
0.312	5/16" AF			
0.315		8mm AF		
0.340	11/32" AF			1/8" WHIT
0.354		9mm AF		
0.375	3/8" AF			
0.393		10mm AF		
0.433		11mm AF		
0.437	7/16" AF			
0.445			1/4" BSF	3/16" WHIT
0.472		12mm AF		
0.500	1/2" AF			
0.512		13mm AF		
0.525			5/16" BSF	1/4" WHIT
0.551		14mm AF		
0.562	9/16" AF			
0.590		15mm AF		
0.600			3/8" BSF	5/16" WHIT
0.625	5/8" AF			
0.629		16mm AF		
0.669		17mm AF		
0.687	11/16" AF			
0.708		18mm AF		

	Equivalent Spanner Sizes			
Jaw Gap (In)	Inch	Metric	Bsf	Whitworth
0.710			7/16" BSF	3/8" WHIT
0.748		19mm AF		
0.750	3/4"" AF			
0.812	13/16" AF			
0.820			1/2" BSF	7/16" WHIT
0.866		22mm AF		
0.875	7/8" AF			
0.920			9/16" BSF	1/2" WHIT
0.937	15/16" AF			
0.944		24mm AF		
1.000	1" AF			
1.010			5/8" BSF	9/16" WHIT
1.023		26mm AF		
1.062	1 1/16" AF	27mm AF		
1.100			11/16" BSF	5/8" WHIT
1.125	1 1/8" AF			
1.181		30mm AF		
1.200			3/4" BSF	11/16" WHIT
1.250	1 1/4" AF			
1.259		32mm AF		
1.300			7/8" BSF	3/4" WHIT
1.312	1 5/16" AF			
1.390			15/16" BSF	13/16" WHIT
1.417		36mm AF		
1.437	1 7/16" AF			
1.480			1" BSF	7/8" WHIT
1.500	1 1/2" AF			
1.574		40mm AF		15/16" WHIT
1.614		41mm AF		
1.625	1 5/8" AF			

	Equivalent Spanner Sizes			
Jaw Gap (In)	Inch	Metric	Bsf	Whitworth
1.670			1 1/8" BSF	1" WHIT
1.687	1 11/16" AF			
1.811		46mm AF		
1.812	1 13/16" AF			
1.860			1 1/4" BSF	1 1/8" WHIT
1.875	1 7/8" AF			
1.968		50mm AF		
2.000	2" AF			
2.050			1 3/8" BSF	1 1/4" WHIT
2.165		55mm AF		
2.362		60mm AF		

16.5 Maintenance Schedule

16.5.1 General

The recommended schedule of maintenance, as appropriate to the scope of works, is given in the following tables.

Generally the maintenance interval is detailed in hours. Where intervals are expressed in hours plus a time (in brackets), then the time in brackets is recommended for machines with a low number of operating hours.

It is recommended that all maintenance work be recorded for future reference on the Maintenance Work Record sheet (See Section 19.6).

16.5.2 Extended Idle Period

Table 19-7 Monthly Maintenance (Extended Idle Period)

Interval	Item	Procedure
Once a month	Complete Machine	General visual inspection plus ensure that electrical heaters are operating to prevent condensation. Check insulation resistance and dry out windings if necessary. Run oil pump for half an hour every month to maintain an oil film on bright metal surfaces.

16.5.3 Initial Start-Up Service

To be performed once after initial start-up or immediately following an extended idle period.

Table 19-8 Initial Start-up Service Schedule

Interval	Item	Procedure
1	Oil Pump Bearing	Where a grease nipple is fitted, it is mandatory that the pump bearing is greased after one hour of running from the first start-up following installation. Thereafter, greasing should be carried out in accordance with the pump manufacturer's instructions.
6	Bearing Oil Seals	Check that bearing oil seals are not leaking.
6	All Pipework and Gaskets	Check that all pipework and gaskets are free of leaks. Rectify as necessary.
100	Oil Filter	Clean gauze in paraffin, kerosene or other suitable cleaning liquid.
100	Oil Pipes and Flanges Joints and Gaskets	Inspect for leaks. Special attention must be given to joints that are hidden i.e. Within bedplates.
200	Rotor Earth Fault Monitor (REFM)	Check for correct operation.

16.5.4 Ancillary Equipment

To be performed at start-up and on a routine basis thereafter.

Table 19-9 Ancillary Equipment Start-up/Routine Maintenance Schedule

Interval	Item	Procedure
See Volume 5	See Volume 5	Check in accordance with supplier's instructions
2000 (3 Months)		Verify minimum rotor lift is achieved. Check for leaks and component failure. Clean as necessary.

16.5.5 Regular Service

Table 19-10 Service Intervals (continued overleaf)

Time Interval	Item	Procedure
2000 (3 months)	Enclosure Seals	Look for water or dust leaks. Seal as necessary.
2000 (3 months)	Oil Pump Gear Type Coupling	Inject approximately 0.01 - 0.015kg of fresh Shell Gadus S2 V220AD grease into the coupling. Do not overfill the coupling sleeve.
2000 (3 months)	Oil	Check oil level.
2000 (3 months)	Rotor Earth Fault Monitor (REFM)	Press test button to test monitor.
4000 (6 months)	Oil Pipes and Flanges Joints and Gaskets	Inspect for leaks. When the opportunity arises, attention should be given to joints that are hidden ie. Within bedplates.
4000 (6 months)	Shaft Earthing Brush	Inspect. The brush must be free in its holder and replaced when worn down to 14mm long. Remove all dirt/dust accumulations and clean rotor track to ensure good contact.
4000 (6 months)	Lube Oil Sample	Examine for oil contaminants: water, acidity and general condition in conjunction with local oil supply agent. Replace if oil does not meet original specification and/or is not in accordance with local oil supply agent's recommendations.
4000 (6 months)	Air Inlet Seals	Check seals and ensure that no oil or dirt is penetrating the machine enclosure.
4000 (6 months)	Bearing Oil Seals	Check that bearing oil seals are not leaking.
4000 (6 months)	Door hinges, locks and catches	Apply drops of oil to ensure proper operation. Use dry graphite lubricant on cylinder locks.
4000 (6 months)	Air Inlet/Outlet Mesh Screen	Inspect and thoroughly clean.
8000 (12 months)	Bearing Insulation	Check resistance.
8000 (12 months)	Blow Open Shutters	Stainless steel shutters have nylon bearings, lubrication not required but check that they operate correctly.
8000 (12 months)	Protection Devices	Check mechanical protective devices to supplier’s specifications/manual settings.
8000 (12 months)	Electrostatic Precipitator	Check operation by absence of oil vapour in discharge during normal running of generator.

Time Interval	Item	Procedure
10000 (18 months)	Oil Pump Gear Type Coupling	The coupling must be dismantled and the grease completely replaced. During assembly the coupling must be lubricated with grease (Typically approximately 0.12kg of Shell Gadus S2 V220AD). The external teeth of both hubs must be well coated with grease and a small amount applied to the rubber sealing rings. The remainder of the grease should be applied to the internal teeth at both ends of the coupling sleeve and smoothed around the inside of the sleeve. Care must be taken not to overfill the coupling with grease since this may cause leakage from the seals.
16000 (24 months)	Paint work	Check paintwork to ensure that it is in good condition. If it has become damaged then the affected areas should be repainted.
25,000 (50 months)*	Knife Edge Seals	Check air pipes for signs of deterioration. Replace if necessary.
25,000 (50 months)*	Pressurised Seals	Check that air gap pressure at intermediate seal compartments is higher than in main bearing housing. If it is not, check air pipes and seal clearance.
25,000 (50 months)*	Main Exciter	Remove any accumulated dust from the rotating rectifiers and the main exciter. Check electrical connections are secure.
25,000 (50 months)*	Rectifier Assembly	Remove dirt adhering to rectifier unit parts.
25,000 (50 months)*	Rotor End Windings	Remove excess deposits using vacuum cleaner, small bottle-brushes and dry, lint-free rags to achieve a uniform state on both sides of a diameter. CAUTION: Avoid moving contaminants further into the windings.
25,000 (50 months)*	Stator End Winding	Inspect and remove excess deposits of dust and grease. Use vacuum cleaner, brushes and lint-free cloth. If the dirt proves to be stubborn, wipe sparingly with `Pro Natur' (Orange Oil) or equivalent. CAUTION: Avoid washing contaminants further into the windings.
40,000 (5 years)*	Main Bearings	Bearing Check - remove bushes. Examine for pressure concentration, scoring and drag marks. Damaged areas may be carefully scraped, taking care not to destroy bearing profile. Check bearing top clearance at each end of the bush by means of lead strips. Check bearing side clearances with feeler gauges. **Note:** Hoses, along with other pipework and associated connectors, should be inspected for signs of deterioration during bush removal/reassembly and replaced as necessary.
100,000 (12½ years)	Complete Machine	Review with manufacturer for recommendations for full inspection/overhaul.
100,000 (12½ years)	Rotor End Caps	Perform non-destructive testing. Check for cracks on surfaces of rings, remove if necessary.

*Maintenance frequency may be adjusted to suit Customer's maintenance schedule.

16.6 Maintenance Work Record Sheet

Table 19-11 Work Record Sheet

Work Undertaken	Comments	Date	Time	Name & Company

Notes


BRUSH

BRUSH GROUP HQ (GB)
NOTTINGHAM ROAD
LOUGHBOROUGH
LEICESTERSHIRE,
LE11 1EX UNITED KINGDOM
T +44 (0) 1509 611511
E SALESUK@BRUSH.EU

BRUSH HMA B.V (NL)
PO BOX 3007
2980 DA
RIDDERKERK, THE NETHERLANDS
T +31 (0) 180 445500
E SALESNL@BRUSH.EU

BRUSH SEM S.R.O(CZ)
TŘ. EDVARDA BENEŠE 39/564
301 00 PLZEŇ
CZECH REPUBLIC
T +420 378 210 111
E SALESCZ@BRUSH.EU

BRUSH (US)
15110 NORTHWEST FREEWAY,
SUITE 150, HOUSTON, TEXAS. 77040.
UNITED STATES OF AMERICA.
T +1 281 580 1314
E SALESUS@BRUSH.EU

BRUSH GMS (US)
601 BRADDOCK AVE,
TURTLE CREEK, PA,
15145, USA
T +1 412 829 7500
E SALESUS@BRUSH.EU

BRUSH (AE)
PO BOX 390815
DUBAI
UNITED ARAB EMIRATES
T +971 4362 6391
E PETER.BROWN@BRUSH.EU

BRUSH (IN)
SPECTRUM TECHNOLOGIES
801A, A WING,
BSEL TECH PARK,
SECTOR-30A, VASHI,
NAVI MUMBAI - 400705, INDIA.
T + 91 22 27810091/92
E SALES@SOOPL.IN

BRUSH (KR)
ENERTOPIA / AWONS
1203 NONHYEON-ROYAL PALACE
249-6 NONHYEON-DONG GANGNAM-GU
135-010 SEOUL, KOREA
T +65 6848 2146
E PHY@ENERTOPIA.FR

BRUSH JAPAN KK (JP)
1139 THE SOHO
2-7-4, AOMI
KOUTOU KU, TOKYO
135-0064, JAPAN
T +81 3 6380 7091
E SALESJP@BRUSH.EU

BRUSH (SG)
TGM GLOBAL PTE LTD
BLOCK 3026 UBI ROAD 1
#03-162,
SINGAPORE 408719.
T +65 6848 2146
E SALES@GLOBAL-TGM.COM

AFTERMARKET ENQUIRIES

Region	Office Hours	Emergency 24/7	Training Courses	Email
Americas	+1 281 580 1314	+1 281 639 1375	+1 281 580 1314	serviceus@brush.eu
Asia	+44 7985 417891	+44 844 3326527	+44 7985 417891	servicejp@brush.eu
Middle East	+971 5010 12795	+44 844 3326527	+971 5010 12795	serviceme@brush.eu
UK	+44 1509 611511	+44 844 3326527	+44 1509 612219	serviceuk@brush.eu
Central Europe	+31 180 445500	+31 180 445501	+31 180 445500	servicenl@brush.eu
Eastern Europe	+420 378 210717	+420 739 586812	+420 378 210717	servicecz@brush.eu

This publication is issued to provide outline information only which (unless agreed by the company in writing) may not be used, applied or reproduced for any purpose or form part of any order or contract or be regarded as a representation relating to products or services concerned. The company reserves the right to alter without notice the specification, design, price or conditions of supply of any product or service.

BRUSH and the BRUSH logo are copyright protected trademarks. All other company and product names are acknowledged as being the trademarks or registered trademarks of their respective companies.

THIS DOCUMENT AND ITS CONTENTS ARE PROVIDED "AS IS", WITH NO REPRESENTATIONS OR WARRANTIES OF ANY KIND, WHETHER EXPRESS OR IMPLIED, INCLUDING BUT NOT LIMITED TO WARRANTIES OF DESIGN, MERCHANTABILITY, OR FITNESS FOR A PARTICULAR PURPOSE. ALL OTHER LIABILITY ARISING FROM RELIANCE UPON ANY INFORMATION CONTAINED HEREIN IS EXPRESSLY DISCLAIMED.

Printed in the UK

www.brush.eu
www.brushparts.eu

Operating & Maintenance Manual

Volume 3: Recommended Spare Parts and Drawings

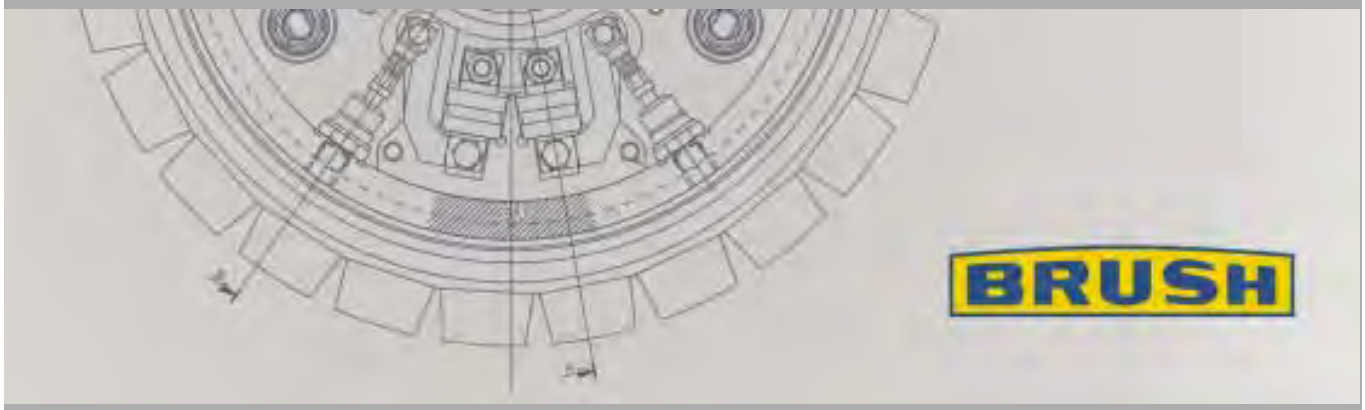

Generator Type: **BDAX62-170ER**
Project: **Trailer Mounted Turbogenerator**

Copyright Notice

© 2013-2014 Brush Electrical Machines Ltd. All rights reserved.

Document and Machine Numbers

Manual Number: TP0002020 **Issue:** B

Publication Date: March 2014

Machine Number(s): 923065.010, 923233.010, 923235.010, 923237.010, 923327.010, 923341.010, 923385.010, 923387.010, 923389.010, 923391.010, 923405.010, 923407.010, 923409.010, 923411.010, 923466.010, 923611.010, 923615.010, 923617.010

Preface

Congratulations on your choice of precision engineered product from BRUSH, the world's leading independent manufacturer of turbogenerators, combining the resources of three major manufacturers of generators for gas turbine, steam turbine and hydro-turbine drive. With manufacturing plants in the UK, the Netherlands and the Czech Republic and with customers across all continents, BRUSH has a truly global presence.

Warnings, Notes and Instructions

The purpose of this manual is to provide information and advice on supplied equipment.

Symbols used in the manual are as follows:



General Notice

Instructions that must be followed.



Ear Protection Notice

Instructions that must be followed.



Important Notice

Important Instructions that must be followed.



General Hazard

Caution to be exercised. Appropriate safety measures to be taken.



Electrical Hazard

Caution to be exercised. Appropriate safety measures to be taken.



Substance Hazard

Caution to be exercised. Appropriate safety measures to be taken.

Cross-document and website hyperlinks are underlined blue.

How to Use the Manual

Mandatory Notice

It is important that any persons responsible for equipment installation, commissioning, operation and maintenance are provided with access to this document, together with relevant/associated additional volumes and third-party information.

It is recommended that prior to undertaking any installation, commissioning, operation or maintenance activities on the equipment, this manual and any associated documentation should be read in its entirety in order to gain a better understanding of system operation.

This manual should be read in conjunction with contract specific, drawings and other first and third-party associated documentation.

All pages and topic headings are numbered for easy reference. Cross-reference(s) to associated paragraphs and documentation is included where appropriate. When referencing particular paragraphs in communications, it is important to specify the Manual Number and the Issue Reference.

The manual, and any amendments, should be maintained for the lifetime of the equipment.

Where this document is included as part of a specific contract, drawings are provided in a separate document volume. First and third-party equipment documents will also be provided as part of the overall contract documentation package.

Copies and Revisions

Additional copies of the latest available versions of manuals are available from BRUSH Aftermarket (See the back cover for contact details). A nominal charge *may* be made for this service.

Feedback

We are constantly seeking to improve the quality and reliability of our products, and we actively encourage user feedback.

Any comments should be addressed to your usual representative, or to BRUSH Aftermarket.

Service and Spares

Quotations for Service and Spares can be obtained from BRUSH Aftermarket at the contact address provided on this document's back cover.

Spare parts information, including prices and lead times, can be obtained from the following website address: http://www.brushparts.eu

BRUSH Aftermarket provides service support 24 hours a day, 7 days a week, supply first class replacement parts, carry out service inspections and maintenance programmes, upgrades and repairs, and comprehensive training programmes for both BRUSH and third-party generators and ancillary products. Further information on BRUSH Aftermarket can be found on our http://www.brush.eu/.

Contents

1. Drawings 4
1.1 Performance Curves (13.8kV 60Hz) 4
1.2 Performance Curves (11.5kV 50Hz) 4
1.3 General 4
1.4 Exciter 4
1.5 Bearings/Shaft Seals 4
1.6 Lubrication Oil System 4
1.7 Packing and Transport 4
1.8 Miscellaneous 4
2. Spare Parts 5
2.1 Introduction 5
2.2 Recommendation Philosophy 5
2.3 Spares Category Definition 6
2.4 Spare Parts Lists and Drawings 6

1. Drawings

The following hyperlinked drawings are attached as separate extra pages*:

1.1 Performance Curves (13.8kV 60Hz)

HEP1216	Permitted Duration of Negative Sequence Current
HEP23080	Variation of Output with Coolant Temperature
HEP23081	Generator Capability Diagram
HEP23082	Generator Efficiency vs. Output
HEP23083	Open Circuit and Short Circuit Characteristic

1.2 Performance Curves (11.5kV 50Hz)

HEP1216	Permitted Duration of Negative Sequence Current
HEP23093	Variation of Output with Coolant Temperature
HEP23094	Generator Capability Diagram
HEP23095	Generator Efficiency vs. Output
HEP23096	Open Circuit and Short Circuit Characteristic

1.3 General

700097300	Auxiliary Terminal Box Connection Diagram
700410500	Generator General Arrangement
321063100	Foundation Loading

1.4 Exciter

317705700	Exciter Sectional Arrangement
317705800	Exciter General Arrangement

1.5 Bearings/Shaft Seals

314461300	Bearing Seal Setting Details
320625700	Generator Bearing Assembly, EE
320625800	Generator Bearing Assembly, NEE

1.6 Lubrication Oil System

317718800	Oil Service Pipework Arrangement
317947700	Pump Assembly

1.7 Packing and Transport

313805900	Rotor Clamp Assembly
317437100	Sling Bracket Assembly
320603400	Packing Details
320957000	Shipping Details

1.8 Miscellaneous

317810900	Rotating Rectifier Assembly
318588700	Heater Connection Diagram, Generator
318965500	Rotor Earthing Brush Assembly
319241400	Heater Arrangement, Generator
320598000	Air Treatment Module

*Drawings are inserted after these pages.

2. Spare Parts

2.1 Introduction

Brush Electrical Machines Ltd. recommends that spare parts are kept at site for operational service support and emergency repair requirements.

A Recommended Spare Parts List and drawings that aid the identification of spare parts by their part numbers and physical locations on the machine are included here.

To allow us to verify the correctness of parts ordered, it is important that the following information is provided at the time of order:

- Machine serial number, found on the generator rating plate which is normally located on the end of the stator
- Part number(s) required. If parts other than those detailed on the spare parts list are required, then specify the part number and description from the assembly drawings, together with the assembly drawing used for reference

Spare parts information, including prices and lead times, can be obtained from the following Web Site address:

Spares Web Site: http://www.brushparts.eu

2.2 Recommendation Philosophy

The parts suggested are those which are most likely to be required during installation, commissioning, operation and scheduled maintenance or which are of strategic importance because of the long lead times normally associated with their manufacture. The basis for recommendation is our many years of experience in the service support of our products.

Spare parts may be packaged as a 'per machine set' or as individual parts depending upon our experience of usage patterns. For some applications a kit may be offered containing an appropriate number of parts to repair a specific assembly or sub assembly of the machine. In the event that other parts are required, which are not listed in the spare parts list, then price and delivery details are available from the BRUSH Aftermarket at address given in Section 2.4

Where more than one machine is on the site it is suggested that, except for strategic spares, the same number of sets of spare parts be maintained.

In the case of strategic spare parts a site operational view should be taken since these parts often have long lead times, and can be high cost.

2.3 Spares Category Definition

Table 2-1 Spares Categories

Spares Category	Definition
Commissioning	Spare parts, which are likely to be consumed during the installation and commissioning period. (It is recommended that these parts be also maintained during the operational period).
Operational	Spare parts, which cover requirements for operation and include items, which may be required to maintain machine protection and monitoring systems.
Maintenance	Spares to be replaced as required, usually at scheduled outages.
Strategic	Spares which would not normally be expected to fail or sustain damage but which we recommend are held, dependent upon the strategic importance of the plant to the user, because of the normally long lead times for their manufacture.

2.4 Spare Parts Lists and Drawings

The following hyperlinked Lists and drawings are attached as separate extra pages*:

321447500 Spares, Generator
321516700 Spare Parts List

* Lists and drawings are inserted after these pages.

BRUSH ELECTRICAL MACHINES LTD. H.E.P 1216

PERMISSIBLE DURATION OF NEGATIVE SEQUENCE CURRENT

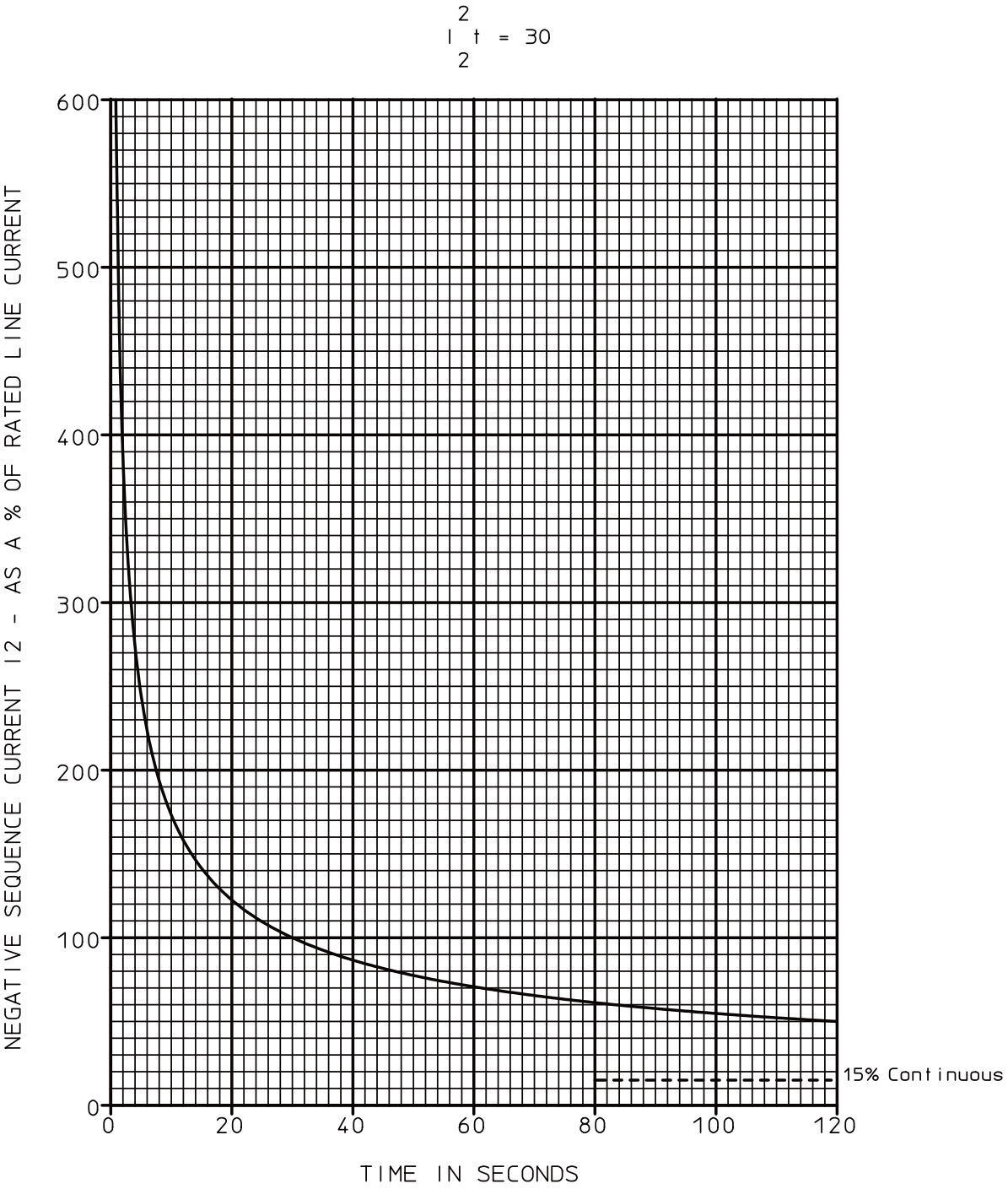

NOTE: For continuous operation rated current must not be exceeded in any one phase.

Issue No. 9: 25-Feb-1993

BRUSH ELECTRICAL MACHINES LTD.

H. E. P 23080

VARIATION OF GENERATOR OUTPUT WITH AIR INLET TEMP

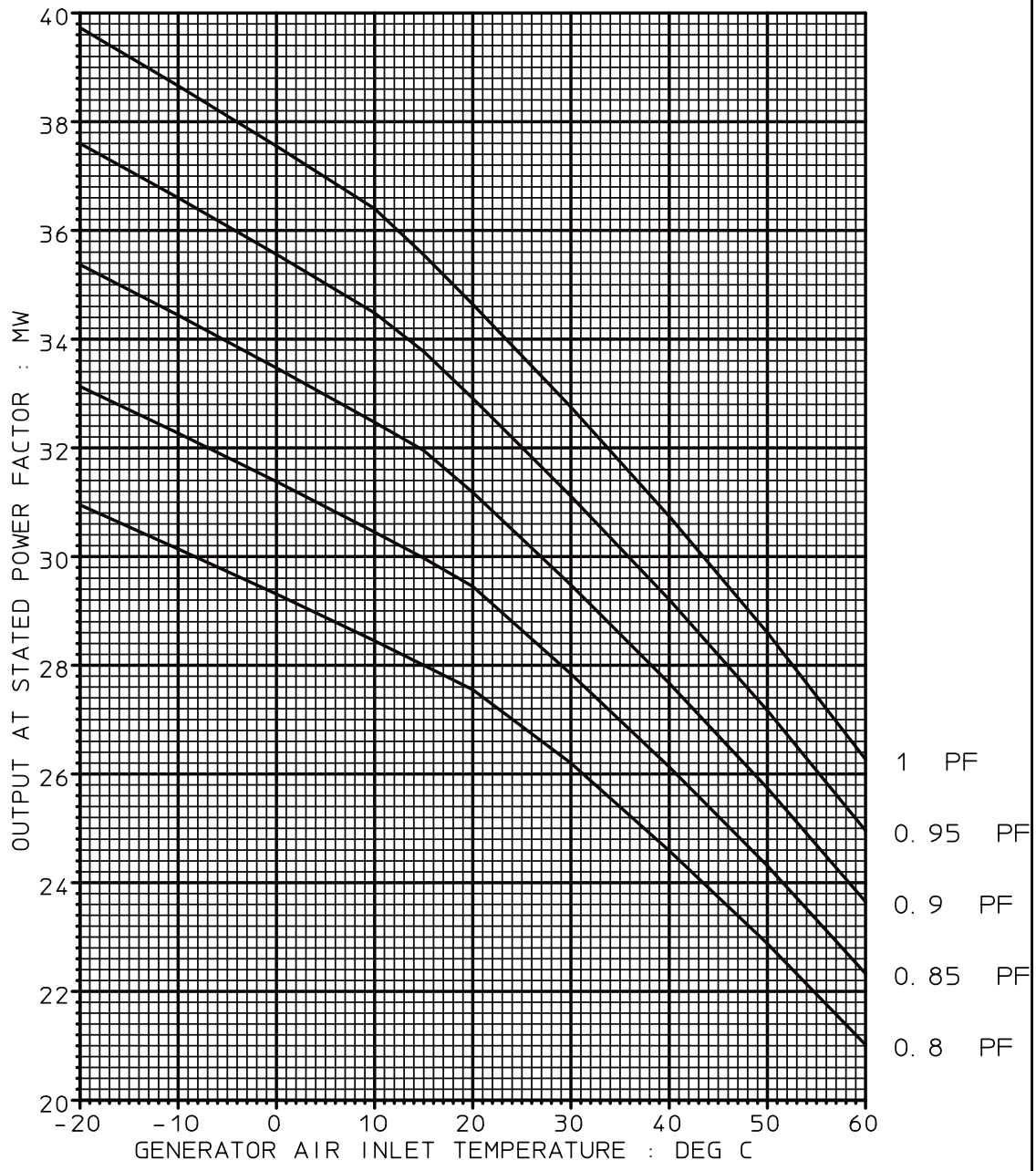

BDAX 62-170ER
13. 80KV, 3 Ph, 60Hz.

Up to 1000 meters ASL

IN ACCORDANCE WITH
IEEE C50. 13
Class F temperatures.
Total temperatures Stator 148 Deg C
Rotor 145 Deg C

Issue No. 3 : 30-Mar-2011

BRUSH ELECTRICAL MACHINES LTD.

H. E. P 23081

GENERATOR CAPABILITY DIAGRAM

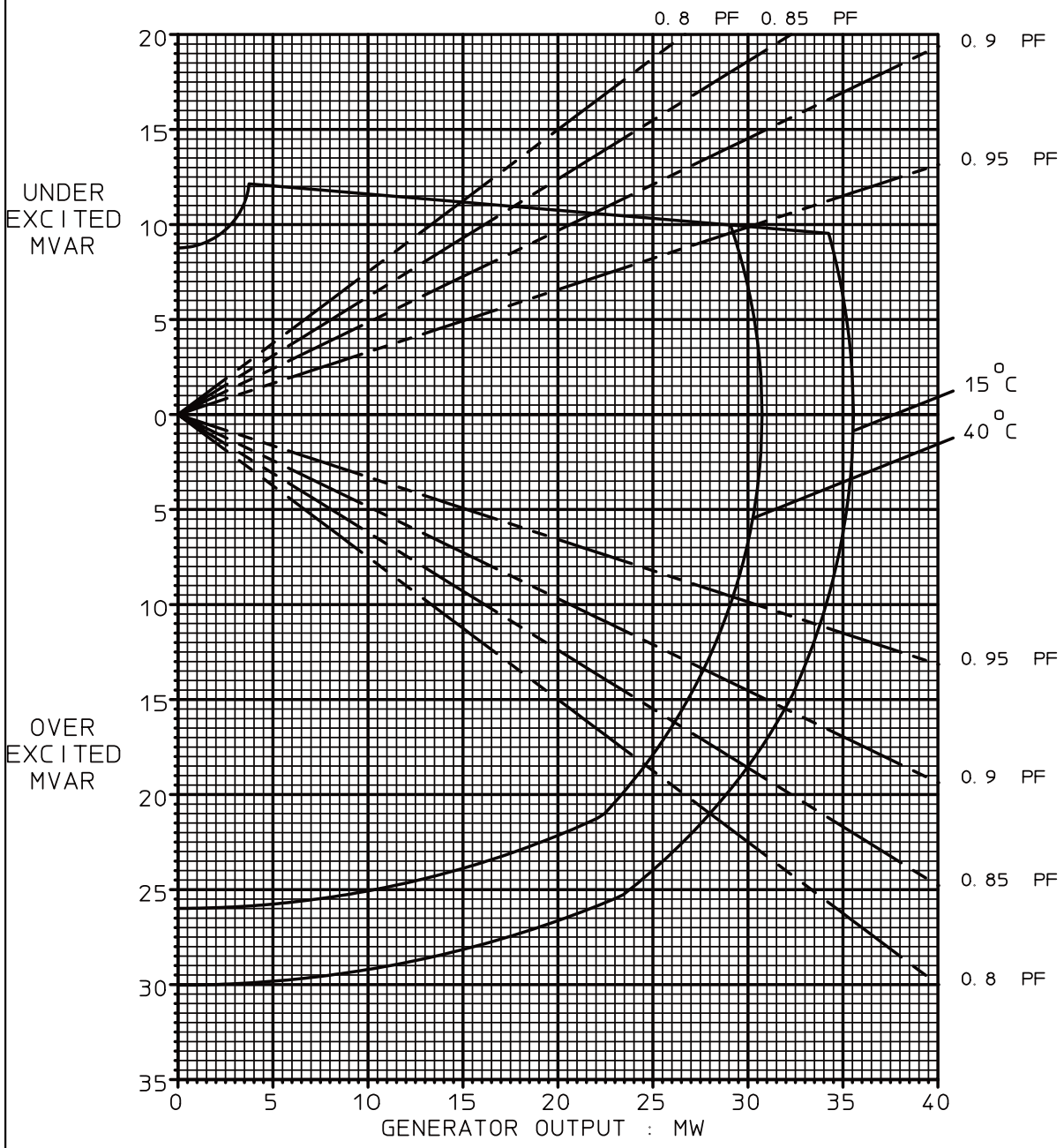

BDAX 62-170ER
13. 80KV, 3 Ph, 60Hz.

Up to 1000 meters ASL

IN ACCORDANCE WITH
IEEE C50. 13
Class F temperatures.
Total temperatures Stator 148 Deg C
Rotor 145 Deg C

Issue No. 2 : 29-Mar-2011

BRUSH ELECTRICAL MACHINES LTD.

H. E. P 23082

VARIATION OF GENERATOR EFFICIENCY WITH LOAD

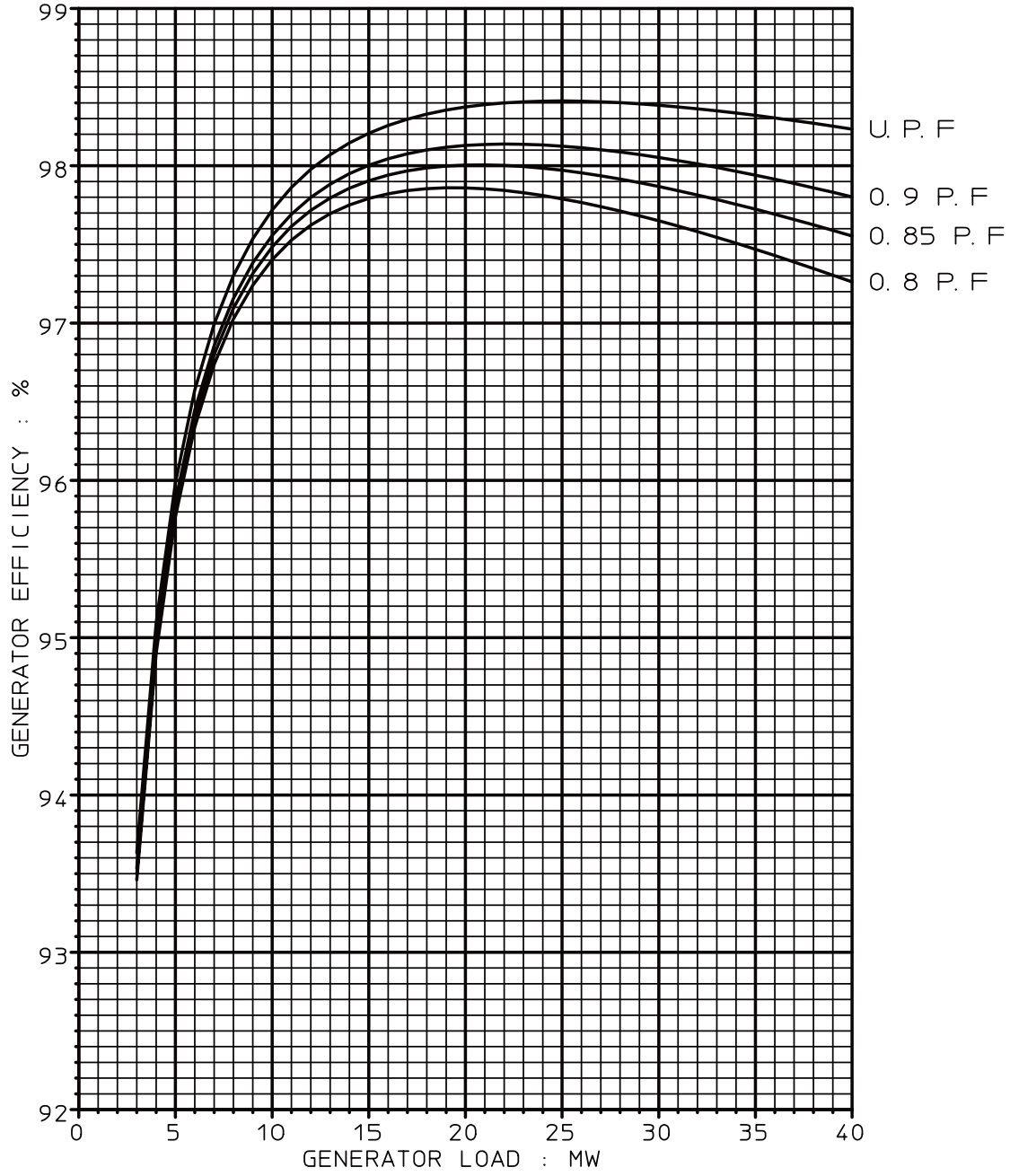

BDAX 62-170ER
13. 8 KV, 3 Ph, 60 Hz.

Efficiencies shown are guaranteed subject to the tolerance specified in IEC 60034-1.

Issue No. 2:23-Feb-2007

BRUSH ELECTRICAL MACHINES LTD.

H. E. P 23083

OPEN CIRCUIT AND SHORT CIRCUIT CHARACTERISTIC

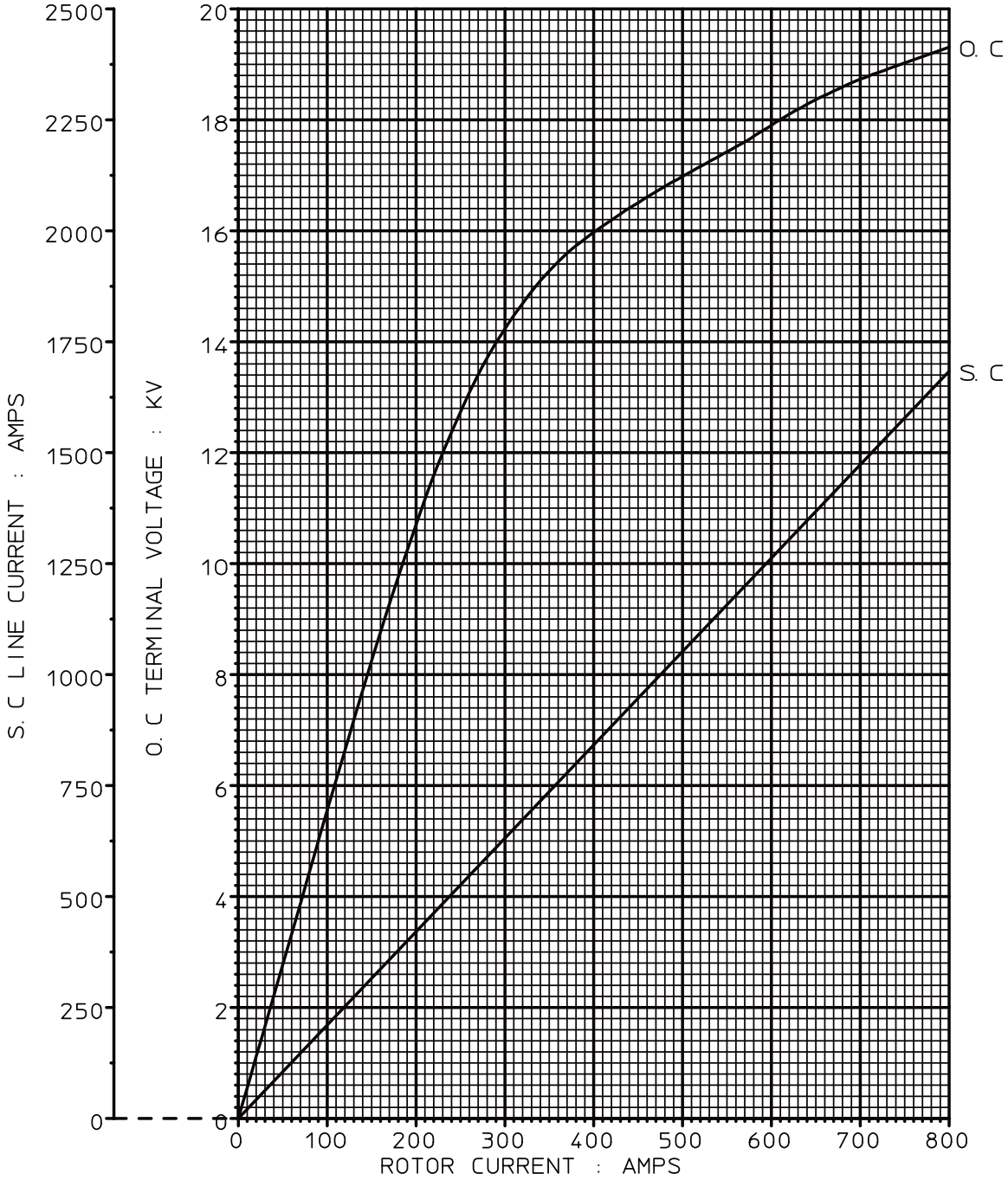

BDAX 62-170ER
3Ph, 60Hz, 3600 RPM.

Issue No. 1 : 21-Feb-2007

BRUSH ELECTRICAL MACHINES LTD.

H. E. P 23093

VARIATION OF GENERATOR OUTPUT WITH AIR INLET TEMP

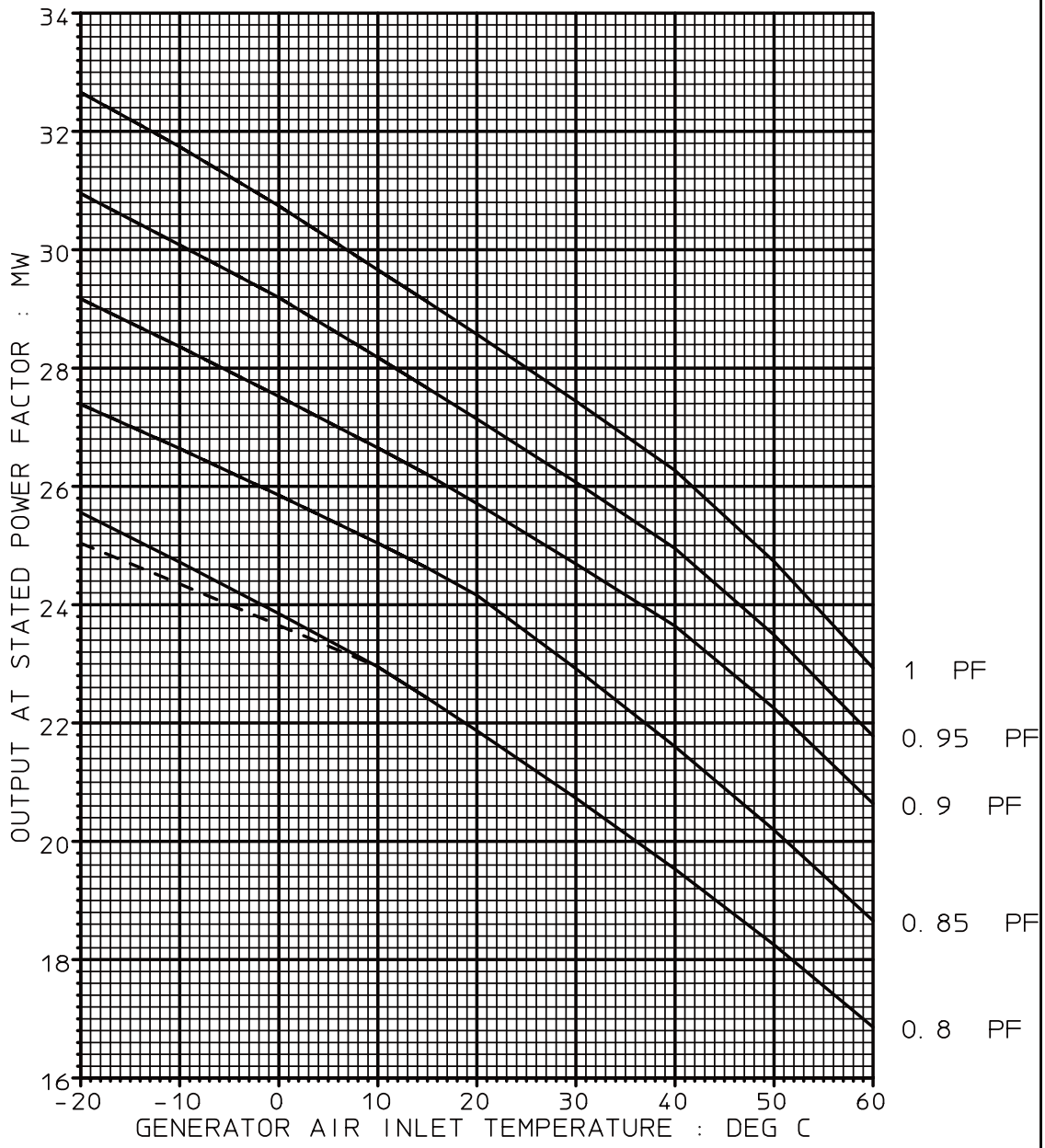

BDAX 62-170ER
11. 50KV, 3 Ph, 50Hz.

Up to 1000 meters ASL

IN ACCORDANCE WITH
IEC 60034-3
Class F temperatures.
Total temperatures Stator 150 Deg C
Rotor 150 Deg C

Solid line shows generator base capability. Dotted line shows I. E. C. recommended cut off.

Issue No. 3 : 01-Feb-2012

BRUSH ELECTRICAL MACHINES LTD. H. E. P 23094

GENERATOR CAPABILITY DIAGRAM

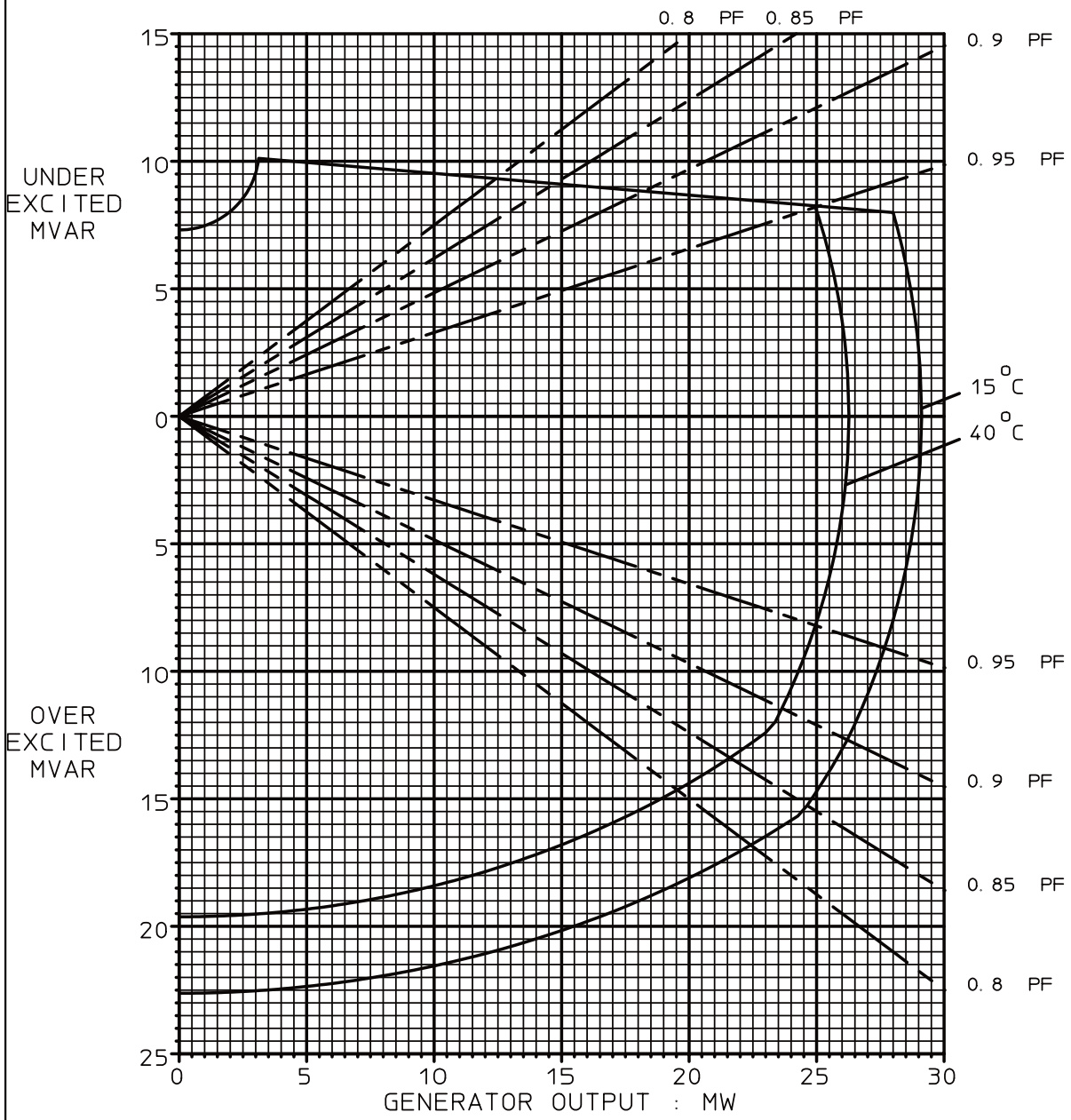

BDAX 62-170ER
11. 50KV, 3 Ph, 50Hz.

Up to 1000 meters ASL

IN ACCORDANCE WITH
IEC 60034-3
Class F temperatures.
Total temperatures Stator 150 Deg C
Rotor 150 Deg C

Issue No. 3 : 01-Feb-2012

BRUSH ELECTRICAL MACHINES LTD.

H. E. P 23095

VARIATION OF GENERATOR EFFICIENCY WITH LOAD

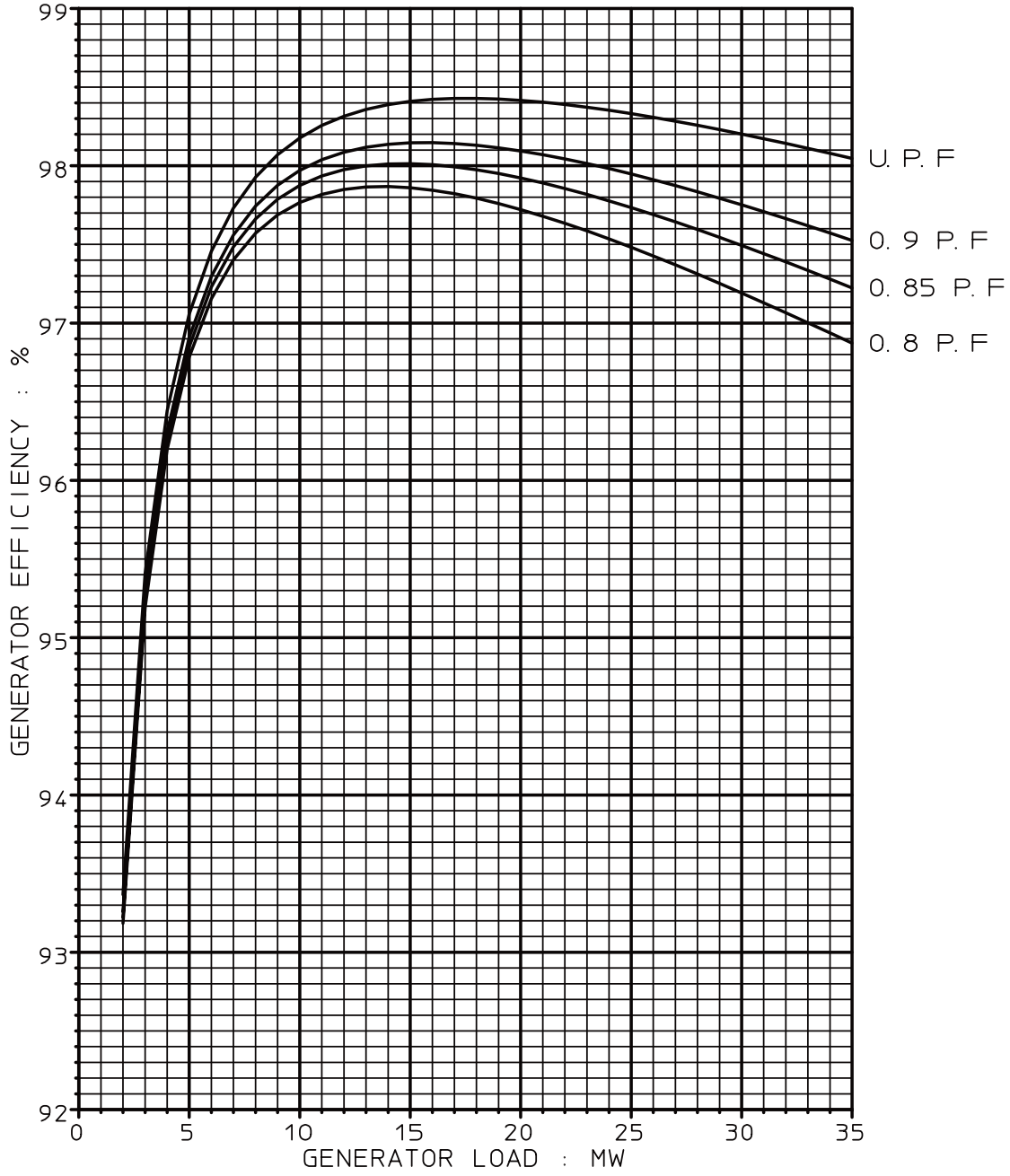

BDAX 62-170ER
11. 5 KV, 3 Ph, 50 Hz.

Efficiencies shown are guaranteed subject to the tolerance specified in IEC 60034-1.

Issue No. 1:23-Feb-2007

BRUSH ELECTRICAL MACHINES LTD.

H. E. P 23096

OPEN CIRCUIT AND SHORT CIRCUIT CHARACTERISTIC

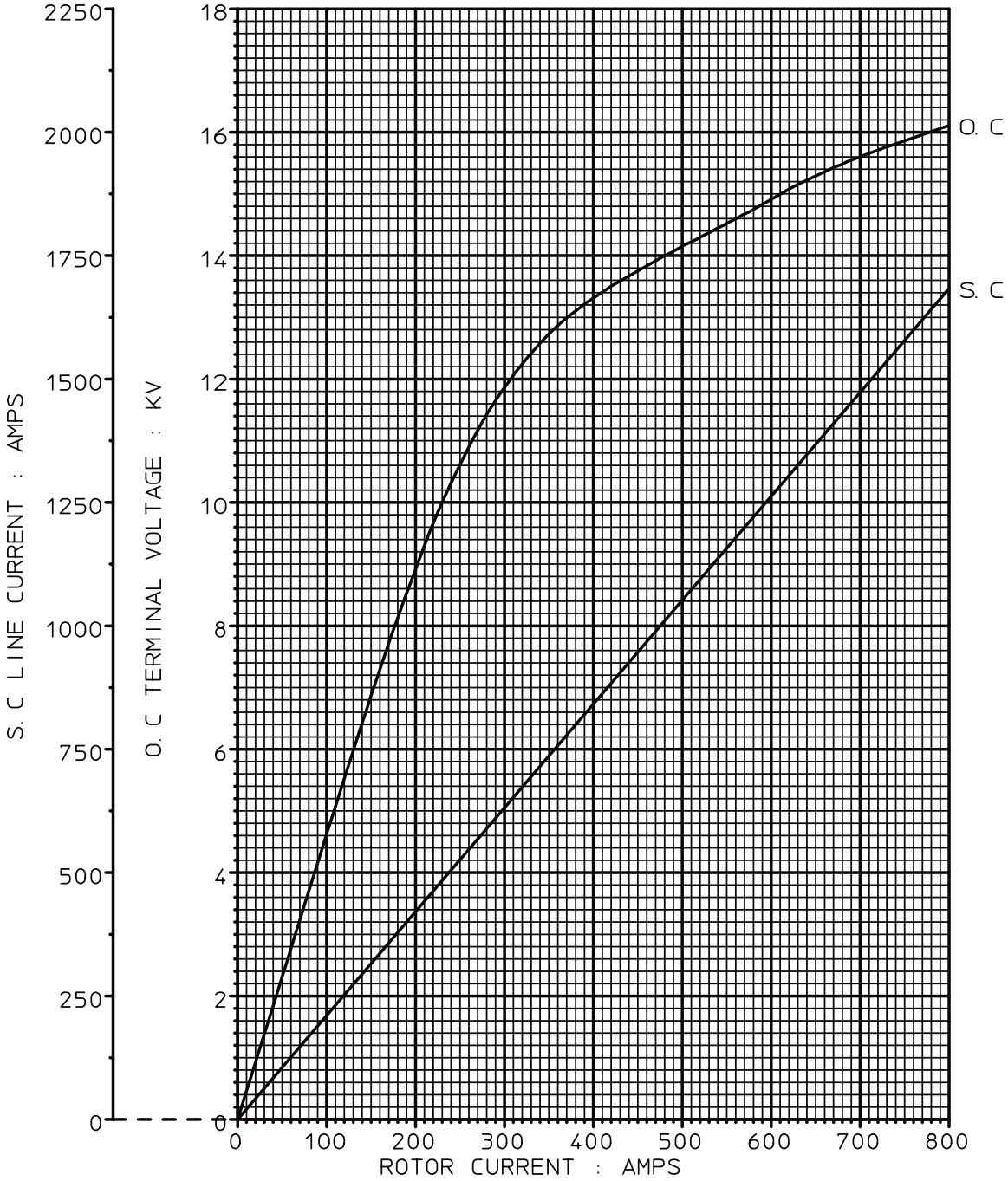

BDAX 62-170ER
3Ph, 50Hz, 3000 RPM.

Issue No. 1 : 23-Feb-2007

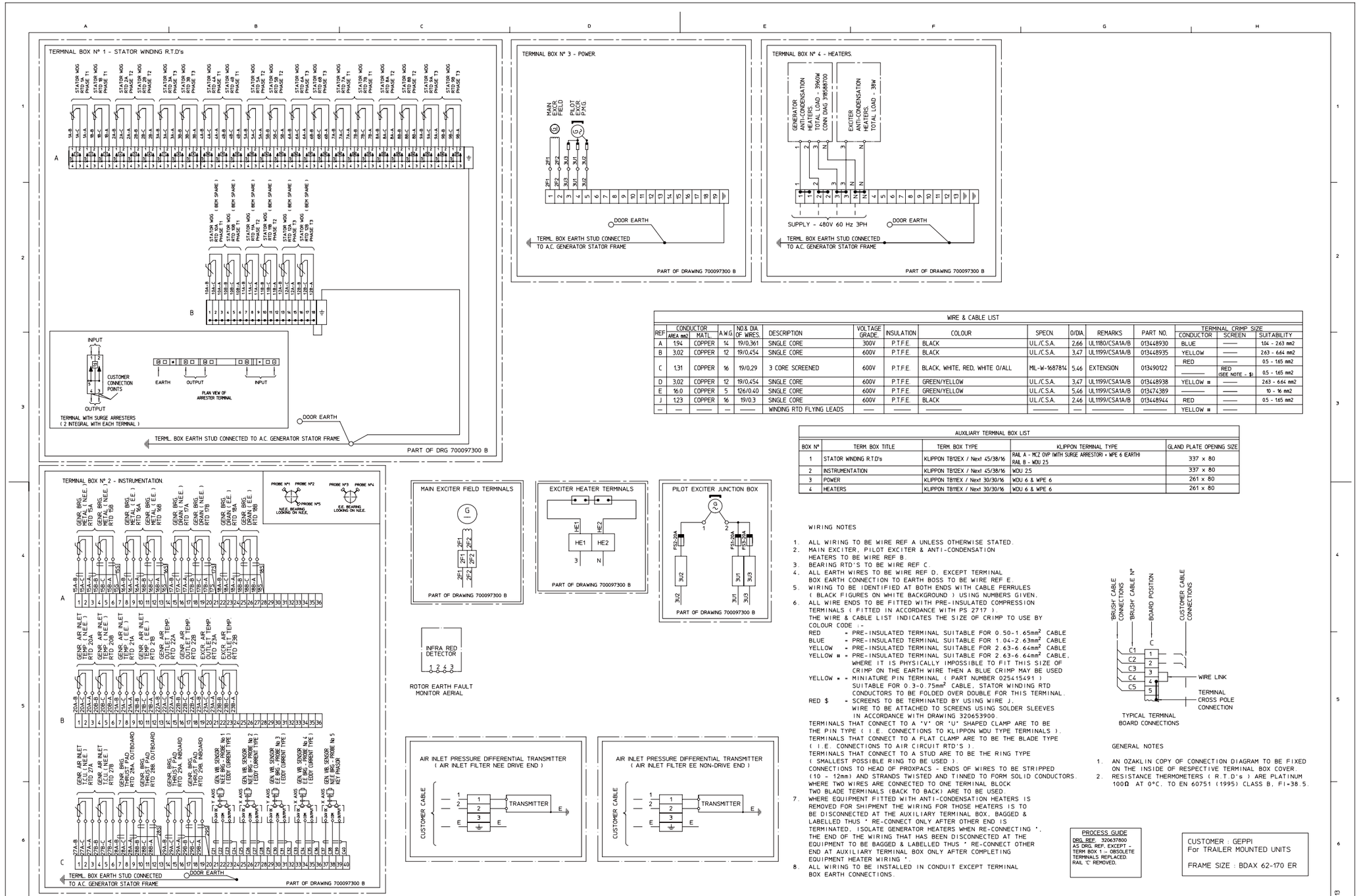

WIRE & CABLE LIST

REF	CONDUCTOR AREA mm2	CONDUCTOR MATL.	A.W.G.	NO.& DIA. OF WIRES.	DESCRIPTION	VOLTAGE GRADE.	INSULATION	COLOUR	SPECN.	O/DIA.	REMARKS	PART NO.	TERMINAL CRIMP SIZE CONDUCTOR	TERMINAL CRIMP SIZE SCREEN	SUITABILITY
A	1.94	COPPER	14	19/0.361	SINGLE CORE	300V	P.T.F.E.	BLACK	UL/C.S.A.	2.66	UL1180/CSA1A/B	013448930	BLUE	——	1.04 - 2.63 mm2
B	3.02	COPPER	12	19/0.454	SINGLE CORE	600V	P.T.F.E.	BLACK	UL/C.S.A.	3.47	UL1199/CSA1A/B	013448935	YELLOW	——	2.63 - 6.64 mm2
C	1.31	COPPER	16	19/0.29	3 CORE SCREENED	600V	P.T.F.E.	BLACK, WHITE, RED, WHITE O/ALL	MIL-W-16878/4	5.46	EXTENSION	013490122	RED ——	RED (SEE NOTE - $)	0.5 - 1.65 mm2
D	3.02	COPPER	12	19/0.454	SINGLE CORE	600V	P.T.F.E.	GREEN/YELLOW	UL/C.S.A.	3.47	UL1199/CSA1A/B	013448938	YELLOW ¤	——	2.63 - 6.64 mm2
E	16.0	COPPER	5	126/0.40	SINGLE CORE	600V	P.T.F.E.	GREEN/YELLOW	UL/C.S.A.	5.46	UL1199/CSA1A/B	013474389	——	——	10 - 16 mm2
J	1.23	COPPER	16	19/0.3	SINGLE CORE	600V	P.T.F.E.	BLACK	UL/C.S.A.	2.46	UL1199/CSA1A/B	013448944	RED	——	0.5 - 1.65 mm2
—	—	——	—	——	WINDING RTD FLYING LEADS	——	——	——	——	—	——	——	YELLOW ¤	——	

AUXILIARY TERMINAL BOX LIST

BOX N°	TERM BOX TITLE	TERM BOX TYPE	KLIPPON TERMINAL TYPE	GLAND PLATE OPENING SIZE
1	STATOR WINDING R.T.D's	KLIPPON TB12EX / Next 45/38/16	RAIL A - MCZ OVP (WITH SURGE ARRESTOR) + WPE 6 (EARTH) RAIL B - WDU 25	337 x 80
2	INSTRUMENTATION	KLIPPON TB12EX / Next 45/38/16	WDU 25	337 x 80
3	POWER	KLIPPON TB11EX / Next 30/30/16	WDU 6 & WPE 6	261 x 80
4	HEATERS	KLIPPON TB11EX / Next 30/30/16	WDU 6 & WPE 6	261 x 80

WIRING NOTES

1. ALL WIRING TO BE WIRE REF A UNLESS OTHERWISE STATED.
2. MAIN EXCITER, PILOT EXCITER & ANTI-CONDENSATION HEATERS TO BE WIRE REF B.
3. BEARING RTD'S TO BE WIRE REF C.
4. ALL EARTH WIRES TO BE WIRE REF D, EXCEPT TERMINAL BOX EARTH CONNECTION TO EARTH BOSS TO BE WIRE REF E.
5. WIRING TO BE IDENTIFIED AT BOTH ENDS WITH CABLE FERRULES (BLACK FIGURES ON WHITE BACKGROUND) USING NUMBERS GIVEN.
6. ALL WIRE ENDS TO BE FITTED WITH PRE-INSULATED COMPRESSION TERMINALS (FITTED IN ACCORDANCE WITH PS 2717). THE WIRE & CABLE LIST INDICATES THE SIZE OF CRIMP TO USE BY COLOUR CODE :-
   RED = PRE-INSULATED TERMINAL SUITABLE FOR 0.50-1.65mm² CABLE
   BLUE = PRE-INSULATED TERMINAL SUITABLE FOR 1.04-2.63mm² CABLE
   YELLOW = PRE-INSULATED TERMINAL SUITABLE FOR 2.63-6.64mm² CABLE
   YELLOW ¤ = PRE-INSULATED TERMINAL SUITABLE FOR 2.63-6.64mm² CABLE, WHERE IT IS PHYSICALLY IMPOSSIBLE TO FIT THIS SIZE OF CRIMP ON THE EARTH WIRE THEN A BLUE CRIMP MAY BE USED
   YELLOW * = MINIATURE PIN TERMINAL (PART NUMBER 025415491) SUITABLE FOR 0.3-0.75mm² CABLE. STATOR WINDING RTD CONDUCTORS TO BE FOLDED OVER DOUBLE FOR THIS TERMINAL.
   RED $ = SCREENS TO BE TERMINATED BY USING WIRE J. WIRE TO BE ATTACHED TO SCREENS USING SOLDER SLEEVES IN ACCORDANCE WITH DRAWING 320653900.
   TERMINALS THAT CONNECT TO A 'V' OR 'U' SHAPED CLAMP ARE TO BE THE PIN TYPE (I.E. CONNECTIONS TO KLIPPON WDU TYPE TERMINALS). TERMINALS THAT CONNECT TO A FLAT CLAMP ARE TO BE THE BLADE TYPE (I.E. CONNECTIONS TO AIR CIRCUIT RTD'S). TERMINALS THAT CONNECT TO A STUD ARE TO BE THE RING TYPE (SMALLEST POSSIBLE RING TO BE USED). CONNECTIONS TO HEAD OF PROXPACS - ENDS OF WIRES TO BE STRIPPED (10 - 12mm) AND STRANDS TWISTED AND TINNED TO FORM SOLID CONDUCTORS. WHERE TWO WIRES ARE CONNECTED TO ONE TERMINAL BLOCK TWO BLADE TERMINALS (BACK TO BACK) ARE TO BE USED.
7. WHERE EQUIPMENT FITTED WITH ANTI-CONDENSATION HEATERS IS REMOVED FOR SHIPMENT THE WIRING FOR THOSE HEATERS IS TO BE DISCONNECTED AT THE AUXILIARY TERMINAL BOX, BAGGED & LABELLED THUS ' RE-CONNECT ONLY AFTER OTHER END IS TERMINATED. ISOLATE GENERATOR HEATERS WHEN RE-CONNECTING '. THE END OF THE WIRING THAT HAS BEEN DISCONNECTED AT THE EQUIPMENT TO BE BAGGED & LABELLED THUS ' RE-CONNECT OTHER END AT AUXILIARY TERMINAL BOX ONLY AFTER COMPLETING EQUIPMENT HEATER WIRING '.
8. ALL WIRING TO BE INSTALLED IN CONDUIT EXCEPT TERMINAL BOX EARTH CONNECTIONS.

TYPICAL TERMINAL BOARD CONNECTIONS

GENERAL NOTES

1. AN OZALKLIN COPY OF CONNECTION DIAGRAM TO BE FIXED ON THE INSIDE OF RESPECTIVE TERMINAL BOX COVER.
2. RESISTANCE THERMOMETERS (R.T.D's) ARE PLATINUM 100Ω AT 0°C. TO EN 60751 (1995) CLASS B, FI-38.5.

PROCESS GUIDE
DRG. REF. 320637800
AS DRG. REF. EXCEPT -
TERM BOX 1 :- OBSOLETE TERMINALS REPLACED.
RAIL 'C' REMOVED.

CUSTOMER : GEPPI
For TRAILER MOUNTED UNITS

FRAME SIZE : BDAX 62-170 ER

ISS	ZONE	MODIFICATION DETAILS	MOD BY	DATE
B		DOOR EARTH CONNECTIONS SHOWN ON TERMINAL BOXES 2, 3 & 4.	JQ	19 FEB 2014

THIS DRAWING IS THE PROPERTY OF BRUSH ELECTRICAL MACHINES LTD. IT IS SUPPLIED ON LOAN IN CONFIDENCE AND MUST BE RETURNED IMMEDIATELY ON REQUEST. NO PART OF THE DRAWING MAY BE COPIED OR REPRODUCED IN ANY WAY, NOR MAY THE INFORMATION OR DESIGN DEPICTED BE DISCLOSED WITHOUT THE PRIOR WRITTEN CONSENT OF THE OWNER. ALL RIGHTS RESERVED.

BRUSH
FALCON WORKS, NOTTINGHAM ROAD, LOUGHBOROUGH, LEICS. LE11 1EX
WWW.BRUSHGROUP.COM

WELDING	WCP004	FIRST PROJ	FUTURE	SCALE	NTS	ISS	DATE	18 FEB 2013	CH'D	JQ	ISS	CH'D	JQ
MANUFACTURING TOL	B.S.D.942 1of5												
SURFACE TEXTURE	B.S.D.986 1of2	DRG REF	320637800			A	DR'N	JQ	APP	REH2	B	APP	NSG
FIRST ANGLE PROJECTION		CONNECTION DIAGRAM - AUXILIARY TERMINAL BOX									A0	700097300	ISS B
		FRAME CODE	BDAX 62-170ER								SHT 1 OF 2	DRAWING RANGE	

ME CAD REV 13

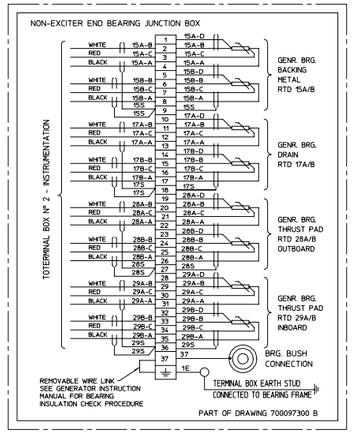

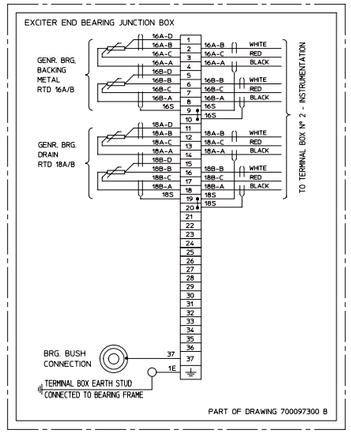

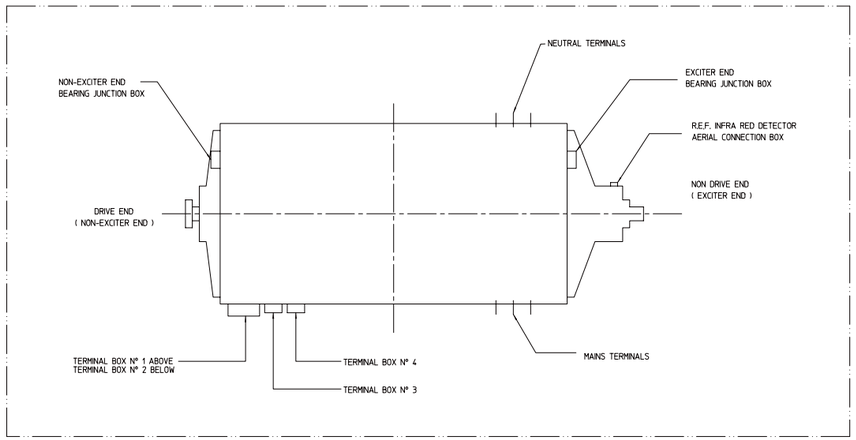

BLOCK PLAN ON A.C. GENERATOR

ISS	ZONE	MODIFICATION DETAILS	MOD BY	DATE
B		DOOR EARTH CONNECTIONS SHOWN ON TERMINAL BOXES 2, 3 & 4.	JQ	19 FEB 2014

THIS DRAWING IS THE PROPERTY OF BRUSH ELECTRICAL MACHINES LTD. IT IS SUPPLIED ON LOAN IN CONFIDENCE AND MUST BE RETURNED IMMEDIATELY ON REQUEST. NO PART OF THIS DRAWING MAY BE COPIED OR REPRODUCED IN ANY WAY, NOR MAY THE INFORMATION OR DESIGN DEPICTED BE DISCLOSED WITHOUT THE PRIOR WRITTEN CONSENT OF THE OWNER. ALL RIGHTS RESERVED.

BRUSH
FALCON WORKS, NOTTINGHAM ROAD, LOUGHBOROUGH, LEICS. LE11 1EX
WWW.BRUSH.CO.UK

FIRST ANGLE PROJECTION

WELDING	WCP004	FIRST PROJ	FUTURE	SCALE	NTS	ISS	DATE	18 FEB 2013	CHD	JQ	ISS	CHD	JQ		
MANUFACTURING TOL	B.S.D.942 Ld5	DRG REF	320637800			A	DRN	JQ	APP	REH2	B	APP	NSG		
SURFACE TEXTURE	B.S.D.986 Le2													ISS	

CONNECTION DIAGRAM - AUXILIARY TERMINAL BOX — A0 700097300 — B

FRAME CODE: BDAX 62-170ER — SHT 2 OF 2 — DRAWING RANGE

ME CAD REV 13

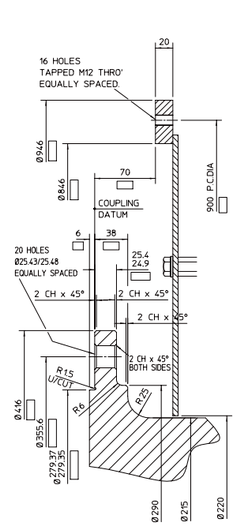

DETAIL OF DRIVE COUPLING
AND COUPLING TUBE MOUNTING FLANGE
(SCALE 1 : 2)

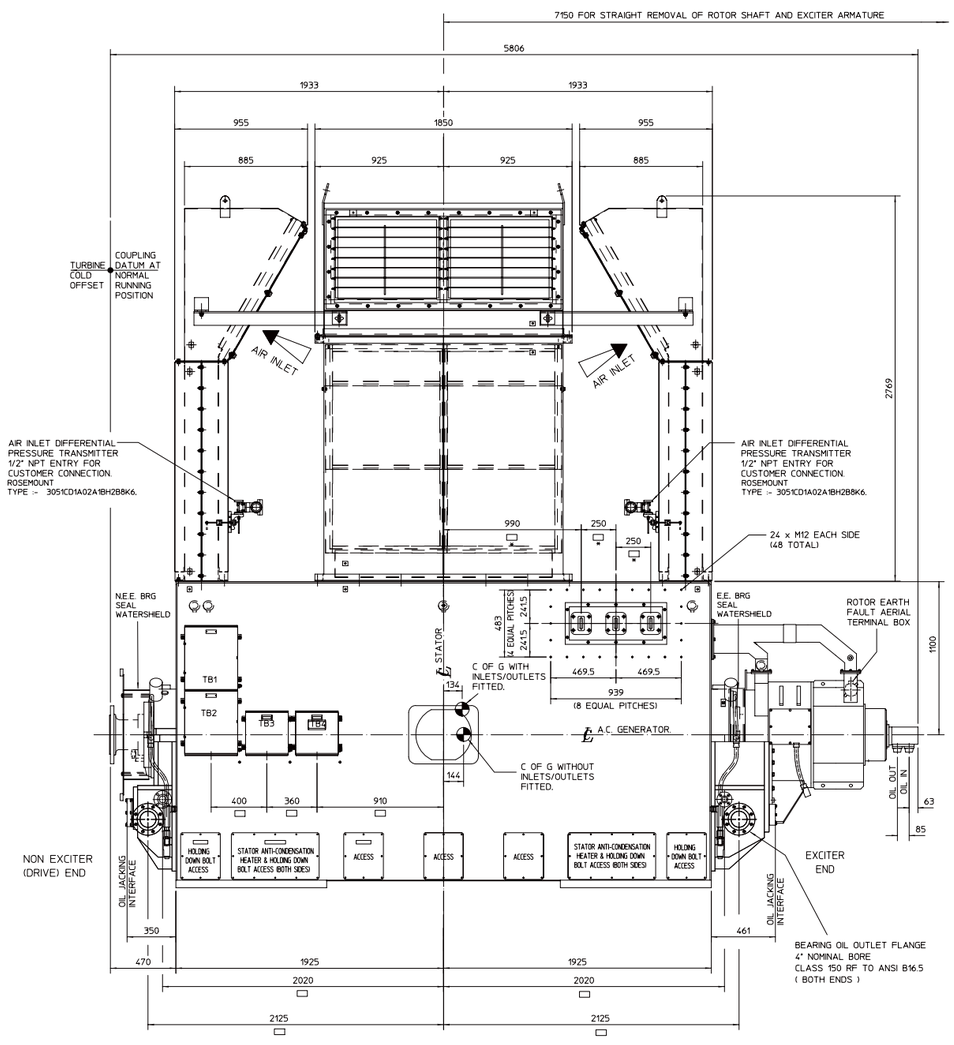

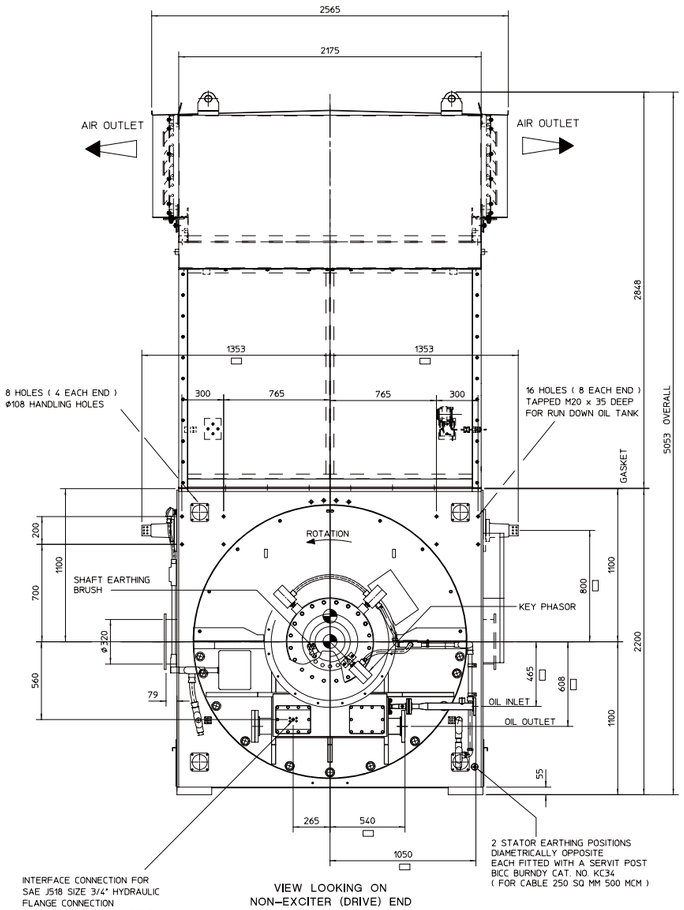

VIEW LOOKING ON
NON-EXCITER (DRIVE) END

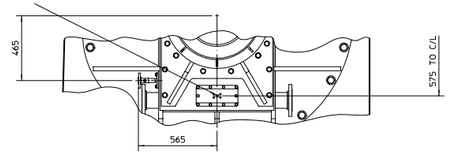

PART VIEW LOOKING ON EXCITER END

ASSOCIATED DRAWINGS :-

320598000 - AIR TREATMENT MODULE ASSEMBLY
317700300 - ROTOR GEOMETRY
321063100 - FOUNDATION LOADING

AUXILIARY TERMINAL BOXES :-

TB1 STATOR WINDING RTD's
TB2 INSTRUMENTATION
TB3 POWER
TB4 HEATERS

PHASE SEQUENCE :- U V W - (50 Hz) IEC.
PHASE SEQUENCE :- T1 T2 T3 - (60 Hz) ANSI.
ROTATION :- ANTI-CLOCKWISE ON NON-EXCITER (DRIVE) END

FRAME SIZE AND FREQUENCY	ESTIMATED WEIGHTS (kg)					AIR FLOW AT AIR OUTLET (m^3/s)	NON-EXCITER END BEARING DETAILS					EXCITER END BEARING DETAILS				
	WOUND STATOR	ROTOR AND EXCR ARM	TOTAL GENERATOR EXCLUDING AIR INLETS & OUTLETS	AIR INLETS AND OUTLET	TOTAL MACHINE INCLUDING AIR INLETS & OUTLETS		OIL FLOW L/S	OIL FLOW US GPM	POWER LOSS (kw)	PRESSURE (BAR)	ORIFICE BORE Ø	OIL FLOW L/S	OIL FLOW US GPM	POWER LOSS (kw)	PRESSURE (BAR)	ORIFICE BORE Ø
62-170 ER - 50 Hz	26500	7167	39650	3030	42680	8	1.2	19	14	2.0	13	0.5	7.9	7	2.0	9
62-170 ER - 60 Hz	26500	7167	39650	3030	42680	10	1.3	20.6	18	2.0	13	0.6	9.5	9	2.0	9

CUSTOMER : GENERAL ELECTRIC PACKAGED POWER LP
PROJECT : TRAILER SETS
FRAME SIZE : BDAX 62-170 ER

ISS	ZONE	MODIFICATION DETAILS	MOD BY	DATE
B		PLAN VIEW E.E BEARING OIL INLET PIPE WORK UPDATED. MOD LETTERS REMOVED.	KPM	11 JUL 2013

THIS DRAWING IS THE PROPERTY OF BRUSH ELECTRICAL MACHINES LTD. IT IS SUPPLIED ON LOAN IN CONFIDENCE AND MUST BE RETURNED IMMEDIATELY ON REQUEST. NO PART OF THE DRAWING MAY BE COPIED, REPRODUCED OR USED FOR ANY OTHER PURPOSE THAN THE INFORMATION OR DESIGN EXPECTED, BE DISCLOSED WITHOUT THE PRIOR WRITTEN CONSENT OF THE OWNER. ALL RIGHTS RESERVED.

BRUSH
FALCON WORKS, NOTTINGHAM ROAD, LOUGHBOROUGH, LEICS. LE11 1EX
www.brushgb.com

WELDING	WCP004	FIRST PROJ	24006	SCALE	1:12.5	ISS	DATE	05 JUL 2013	CHD	MLT	ISS CHD NSG
MANUFACTURING TOL	B.S.D.942 Ld5	DRG REF	320639200			A	DRN MLT		APP	NSG	B APP NSG
SURFACE TEXTURE	B.S.D.986 Ls2										

FIRST ANGLE PROJECTION

GENERAL ARRANGEMENT - GENERATOR — A0 700410500 — ISS B

FRAME CODE BDAX 62-170ER — SHT 1 OF 3 — DRAWING RANGE

ME CAD REV 13

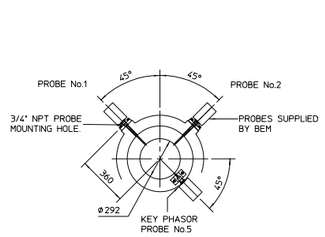

PART SECTION THROUGH NEE BEARING
LOOKING ON NEE SHOWING
DETAILS OF BENTLY NEVADA PROBES

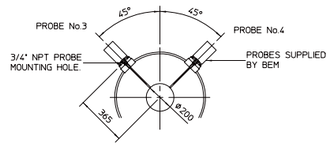

PART SECTION THROUGH EE BEARING
LOOKING ON NEE SHOWING
DETAILS OF BENTLY NEVADA PROBES

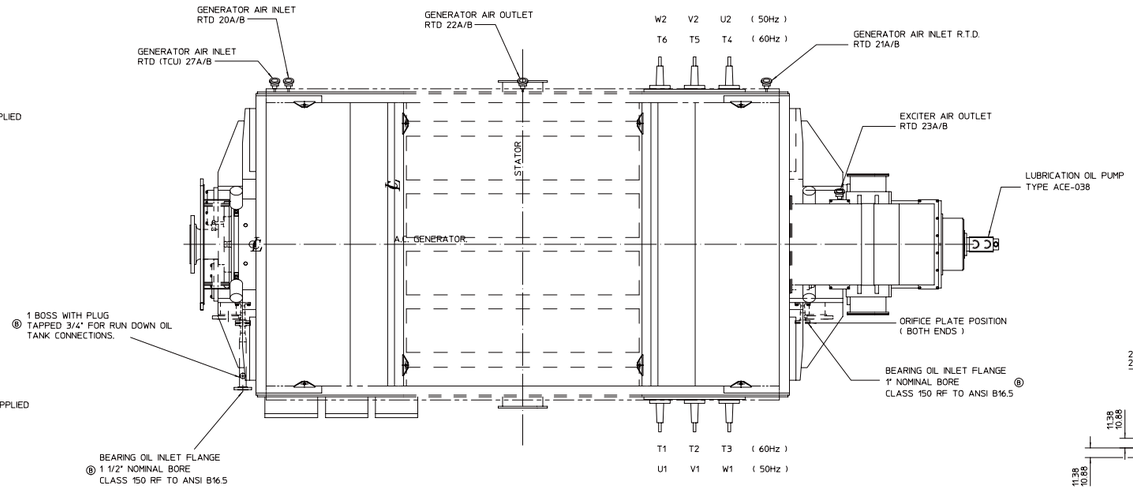

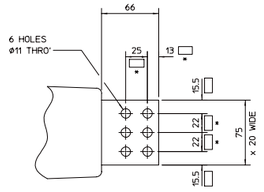

DETAIL OF MAINS
AND NEUTRAL TERMINAL END
(SCALE 1 : 2)

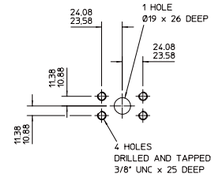

ENLARGED DETAIL OF HYDRAULIC FLANGE
CONNECTIONS FOR VERTICAL OIL JACKING
(SCALE 1 : 2)

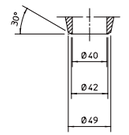

DETAIL OF LUB OIL PUMP
INLET AND OUTLET PORTS
(SCALE 1 : 2)

NOTES:-

1. BEARING DETAILS ASSUME OIL TO ISO VG 32 AT 55°C
2. STATED PRESSURES ARE AT BEARING OIL INLETS
3. WEIGHTS QUOTED ARE APPROX. CALCULATED FIGURES
4. BOTH BEARINGS ARE INSULATED
5. LOCATION BEARING FITTED AT NON-EXCITER END ONLY
6. NON-EXCITER END BEARING MAX ALLOWABLE AXIAL THRUST 12000N
7. AIR DRAIN FROM BEARING = $0.05m^3$/SEC (TOTAL)
8. DIMENSIONS THUS [ ] ARE TO BE FILLED IN WITH THE ACTUAL DIMENSIONS BY QUALITY CONTROL DEPARTMENT DURING FINAL INSPECTION
   BOXES MARKED WITH * INDICATE MULTIPLE DIMENSIONS (eg DE AND NDE, RHS AND LHS etc) AND ARE TO BE FILLED WITH WORST CASE
9. CUSTOMER TO WIRE DIRECT TO PRESSURE DIFFERENTIAL TRANSMITTERS IN EACH AIR INLET FILTER UNIT

CUSTOMER	: GENERAL ELECTRIC PACKAGED POWER LP
PROJECT	: TRAILER SETS
FRAME SIZE	: BDAX 62-170 ER

ISS	ZONE	MODIFICATION DETAILS	MOD BY	DATE
B		PLAN VIEW EE BEARING OIL INLET PIPE WORK UPDATED. MOD LETTERS REMOVED.	KPM	11 JUL 2013

THIS DRAWING IS THE PROPERTY OF BRUSH ELECTRICAL MACHINES LTD. IT IS SUPPLIED ON LOAN IN CONFIDENCE AND MUST BE RETURNED IMMEDIATELY ON REQUEST. NO PART OF THE DRAWING MAY BE COPIED OR REPRODUCED IN ANY WAY, NOR MAY ITS CONTENTS BE DISCLOSED WITHOUT PRIOR WRITTEN CONSENT OF THE OWNER. ALL RIGHTS RESERVED.

BRUSH
FALCON WORKS, NOTTINGHAM ROAD, LOUGHBOROUGH, LEICS. LE11 1EX
WWW.BRUSH.CO.UK

WELDING	WCP004	FIRST PROJ	24006	SCALE	1:12.5	ISS	DATE	05 JUL 2013	CHD	MLT	ISS	CHD	NSG
MANUFACTURING TOL	B.S.D.942 Ls5												
SURFACE TEXTURE	B.S.D.986 Ls2	DRG REF	320639200			A	DRN	MLT	APP	NSG	B	APP	NSG
FIRST ANGLE PROJECTION		GENERAL ARRANGEMENT - GENERATOR											
		A0 700410500										ISS	B
FRAME CODE	BDAX 62-170ER										SHT 2 OF 3	DRAWING RANGE	

ME CAD REV 13

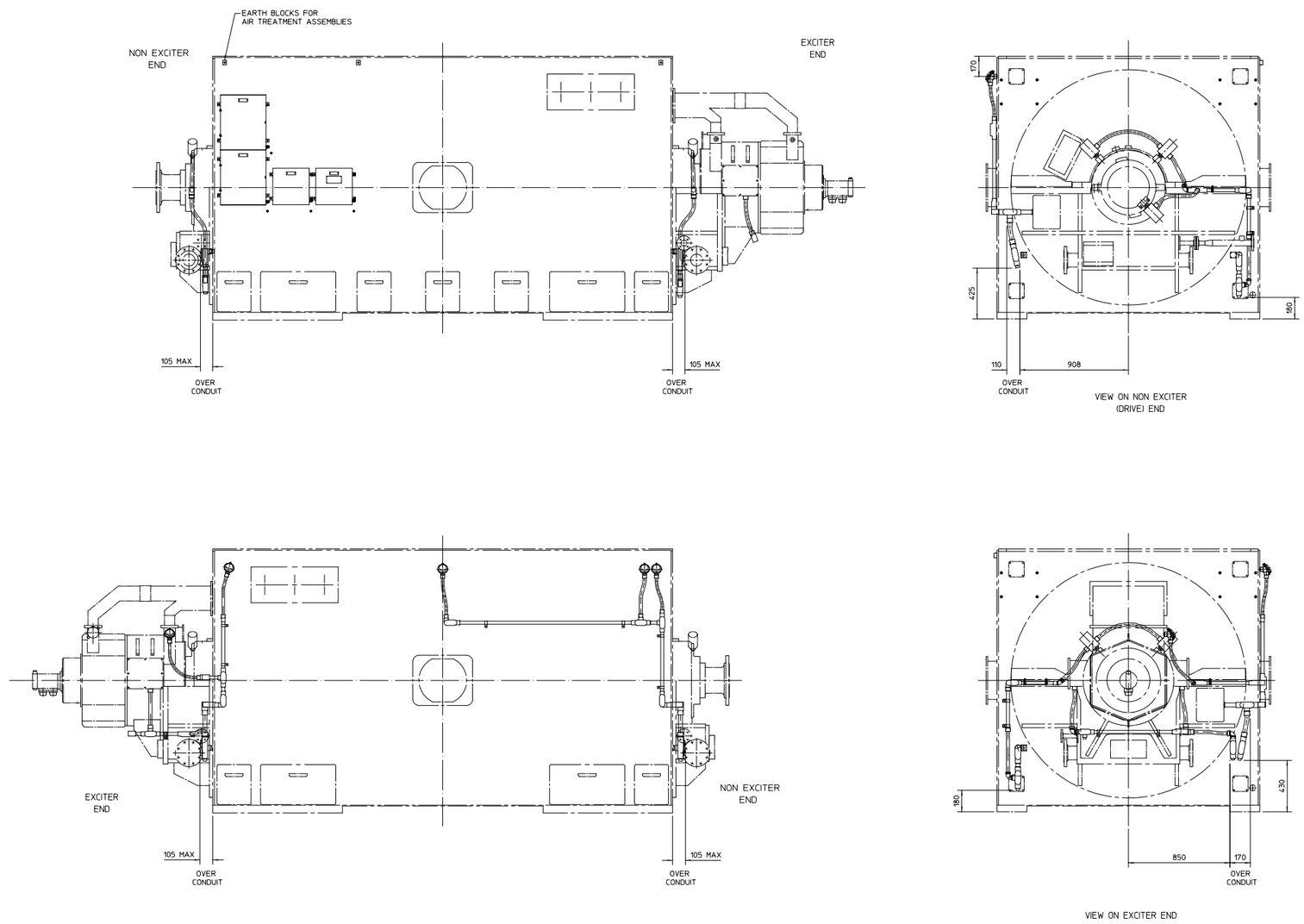

DETAIL SHOWING CONDUIT DIMENSIONS

ISS	ZONE	MODIFICATION DETAILS	MOD BY	DATE
B		PLAN VIEW E.E BEARING OIL INLET PIPE WORK UPDATED. MOD LETTERS REMOVED.	KPM	11 JUL 2013

THIS DRAWING IS THE PROPERTY OF BRUSH ELECTRICAL MACHINES LTD. IT IS SUPPLIED ON LOAN IN CONFIDENCE AND MUST BE RETURNED IMMEDIATELY ON REQUEST. NO PART OF THE DRAWING MAY BE COPIED OR REPRODUCED IN ANY WAY. NOR MAY THE INFORMATION OR DESIGN DEPICTED BE DISCLOSED WITHOUT THE PRIOR WRITTEN CONSENT OF THE OWNER. ALL RIGHTS RESERVED.

BRUSH
FALCON WORKS, NOTTINGHAM ROAD, LOUGHBOROUGH, LEICS. LE11 1EX
WWW.BRUSH.EU

WELDING	WCP004	FIRST PROJ	24006	SCALE	1:12.5	ISS	DATE	05 JUL 2013	CHD	MLT	ISS	CHD	NSG
MANUFACTURING TOL	B.S.D.942 Ld5	DRG REF	320639200			A	DRN	MLT	APP	NSG	B	APP	NSG
SURFACE TEXTURE	B.S.D.986 Ls2												

FIRST ANGLE PROJECTION

GENERAL ARRANGEMENT - GENERATOR

A0 700410500 ISS B

FRAME CODE BDAX 62-170ER

SHT 3 OF 3 DRAWING RANGE

ME CAD REV 13

QTY	REF	PART No	DESCRIPTION	MATL	SPEC	CODE No	MATL SIZE	MASS
4	101	313789601	JACKING PIN ASSEMBLY	STL				16

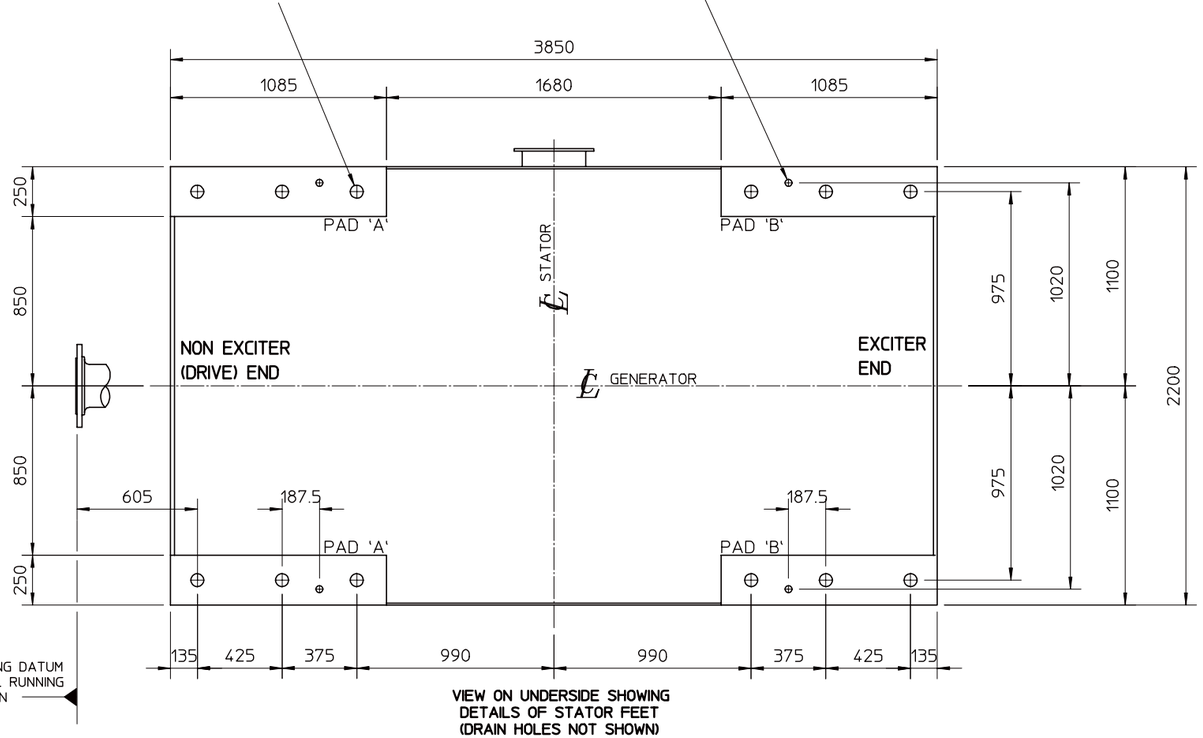

VIEW ON UNDERSIDE SHOWING
DETAILS OF STATOR FEET
(DRAIN HOLES NOT SHOWN)

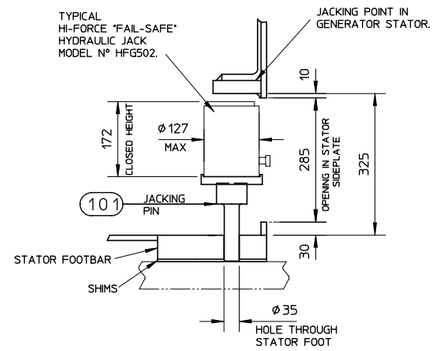

POST-GROUT JACKING OF
AC GENERATOR AT ø35 HOLES

NOTE
=====
HOLES IN STATOR FEET USED FOR JACKING DURING ALIGNMENT MUST BE SEALED - IF GROUT IS NOT PLACED AROUND THE GENERATOR FEET AN OIL RESISTANT MASTIC COMPOUND MUST BE APPLIED TO THE BOTTOM OF EACH JACKING HOLE FOLLOWING COMPLETION OF ALIGNMENT. (ANY UN-USED DOWEL HOLES TO BE TREATED IN THE SAME WAY).

POWER MVA	VOLTS KV	FREQUENCY Hz	POWER FACTOR	X"d	FULL LOAD PADS A & B Kg
32.556	13.8	60	0.90	0.190	2219
32.235	13.8	60	0.85	0.172	1900
29.111	11.5	50	0.90	0.186	2181
24.000	11.5	50	0.80	0.154	1598

FOUNDATION BOLT PRE-LOAD = 15000 kg

LOAD DESCRIPTION	LOAD LOCATIONS	
	PAD 'A' Kg	PAD 'B' Kg
STATIC (VERTICAL)	9650	11700
LINE TO LINE SHORT CIRCUIT	±23000	±23000
FAULTY SYNCH WITH ZERO SYSTEM REACTANCE *	±39700	±39700

* FOR KNOWN VALUES OF P.U SYSTEM REACTANCE (Xs)
SYNCHRONISING LOAD = QUOTED FAULTY SYNCH LOAD x $\frac{X"d}{X"d + Xs}$

CUSTOMER : GENERAL ELECTRIC PACKAGED POWER LP
PROJECT : TRAILER SETS
FRAME SIZE : BDAX 62-170 ER

ISS	ZONE	MODIFICATION DETAILS	MOD BY	DATE

THIS DRAWING IS THE PROPERTY OF BRUSH ELECTRICAL MACHINES LTD. © IT IS SUPPLIED ON LOAN IN CONFIDENCE AND MUST BE RETURNED IMMEDIATELY ON REQUEST. NO PART OF THE DRAWING MAY BE COPIED OR REPRODUCED IN ANY WAY, NOR MAY THE INFORMATION OR DESIGN DEPICTED BE DISCLOSED WITHOUT THE PRIOR WRITTEN CONSENT OF THE OWNER. ALL RIGHTS RESERVED.

BRUSH
FALCON WORKS, NOTTINGHAM ROAD, LOUGHBOROUGH, LEICS. LE11 1EX
WWW.BRUSH.EU

WELDING	WCP004
MANUFACTURING TOL	B.S.D.942 Ld5
SURFACE TEXTURE	B.S.D.986 Ls2
FIRST ANGLE PROJECTION	

FIRST PROJ	FUTURE	SCALE	1:17.5	ISS	DATE	12 Apr 2011	CH'D	BM2	ISS	CH'D	BM2
DRG REF	320617900			A	DR'N	BM2	APP	NSG	A	APP	NSG

FOUNDATION LOADING

C 321063100 ISS A

FRAME CODE: BDAX 62-170ER | SHT 1 OF 1 | DRAWING RANGE

ME CAD REV 13

QTY	REF	PART No	DESCRIPTION	MATL	SPEC	CODE No	MATL SIZE	MASS
X	01		SECTIONAL ARRANGEMENT					

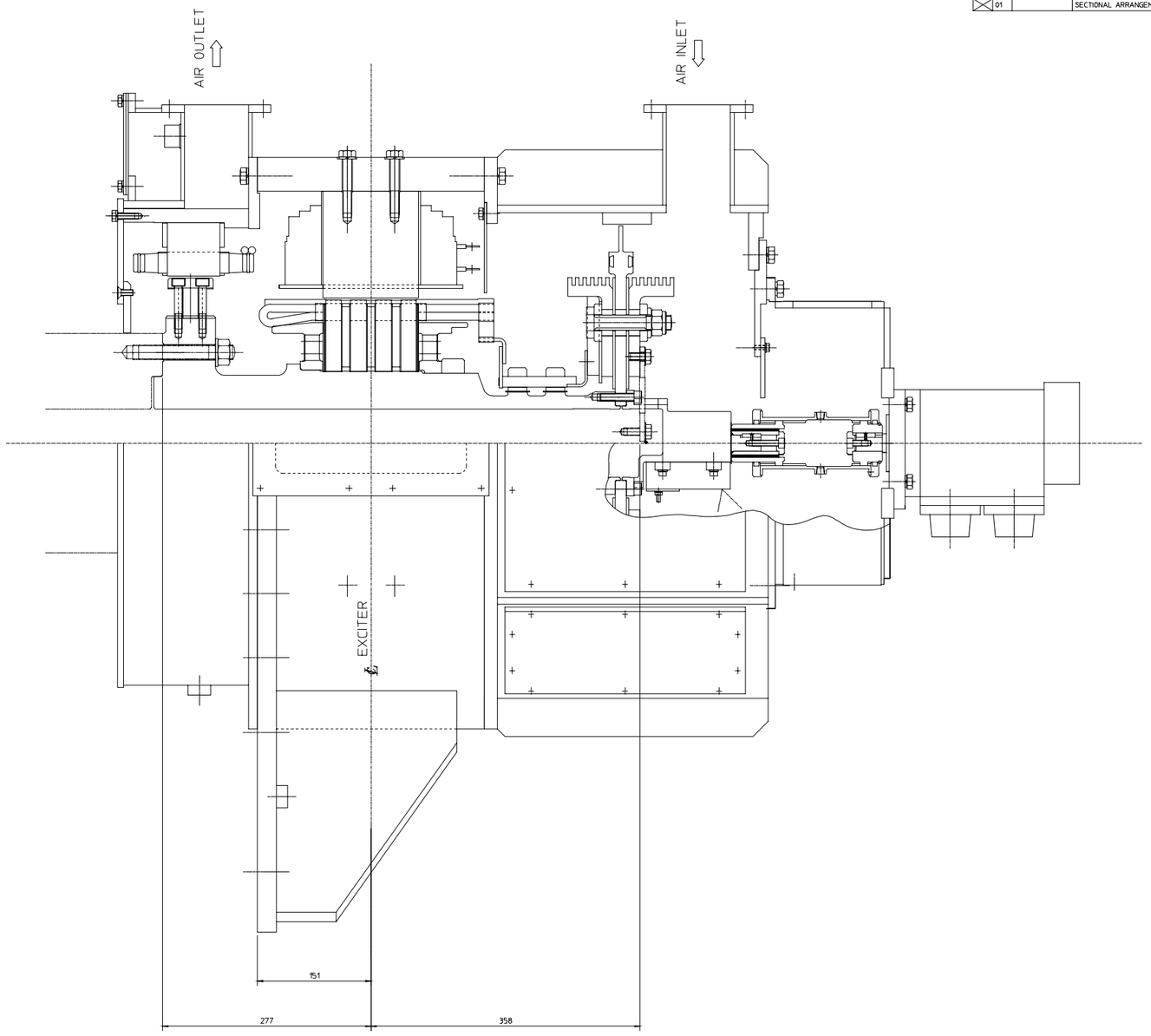

BXF 10-13-3S MAIN EXCITER + MXI 44-07-A1 PILOT EXCITER

ISS	ZONE	MODIFICATION DETAILS	MOD BY	DATE

CIRCULATION
E
ADDL PRINTS

THIS DRAWING IS THE PROPERTY OF BRUSH ELECTRICAL MACHINES LTD (T.I.) IT IS SUPPLIED ON LOAN IN CONFIDENCE AND MUST BE RETURNED IMMEDIATELY ON REQUEST. NO PART OF THE DRAWING MAY BE COPIED OR REPRODUCED IN ANY WAY, NOR MAY THE INFORMATION OR DESIGN DEPICTED BE DISCLOSED WITHOUT THE PRIOR WRITTEN CONSENT OF THE OWNER. ALL RIGHTS RESERVED.

BRUSH
BRUSH ELECTRICAL MACHINES LTD
P.O. BOX 19 LOUGHBOROUGH LEICESTERSHIRE LE11 1HJ

WELDING	B.S.D.927 Lx2	FIRST PROJ	03680	SCALE	1:2	ISS	DATE	09.06.2000	CH'D	SAB	ISS	CH'D	
MANUFACTURING TOL	B.S.D.942 Lc5	STD OR SPEC		DEPT	DAX	A	DR'N	SAB	APP	NSG		APP	
SURFACE TEXTURE	B.S.D.986 Ls2	DRG REF	3173946A										

FIRST ANGLE PROJECTION

SECTIONAL ARRANGEMENT - EXCITER

A0 3177057 ISS A

ABBREVIATED DESCRIPTION | SHT 1 OF 1 | DRAWING RANGE

ME CAD REV 8.7

QTY	REF	PART No	DESCRIPTION	MATL	SPEC	CODE No	MATL SIZE	MASS
	01		GENERAL ARRANGEMENT				ANTICLOCKWISE ROTATION	
B	02		GENERAL ARRANGEMENT				CLOCKWISE ROTATION	

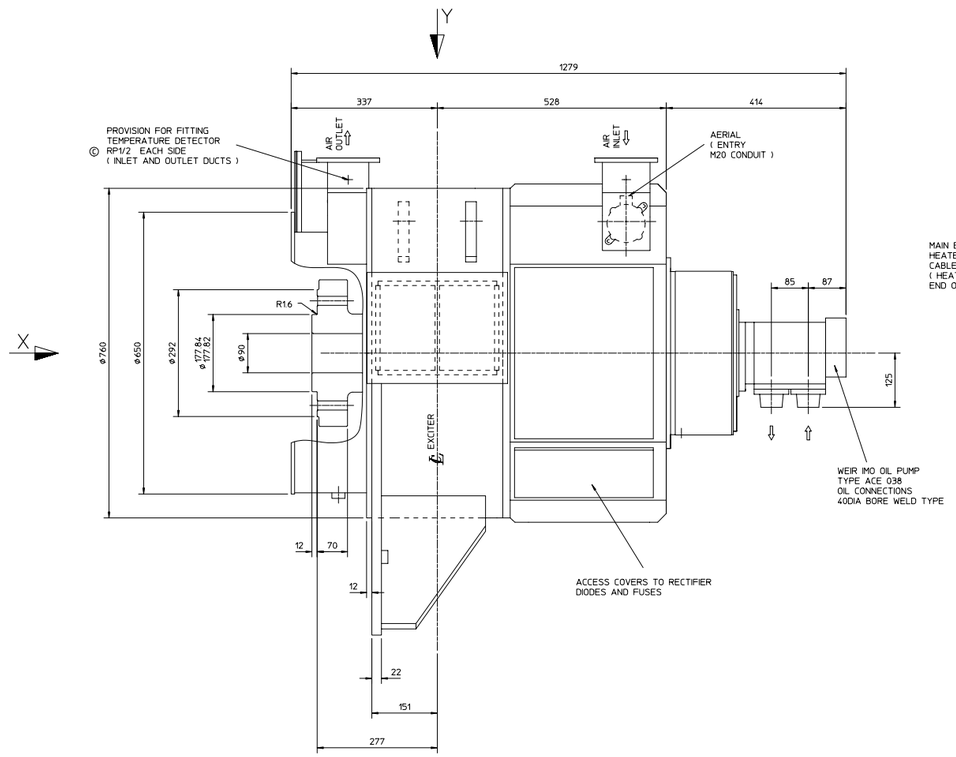

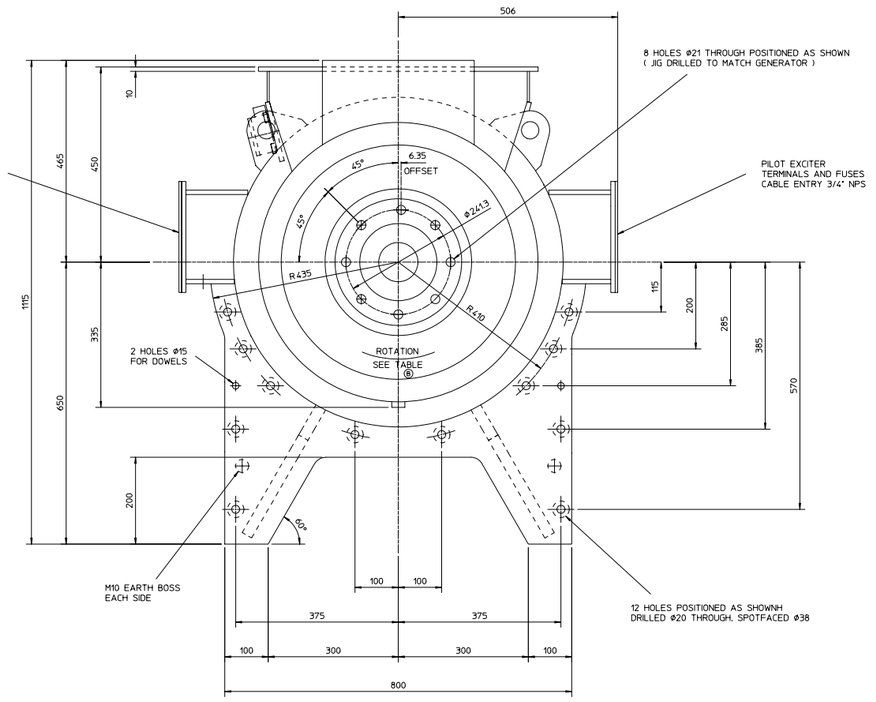

VIEW ON COUPLING END
AS ARROW 'X'

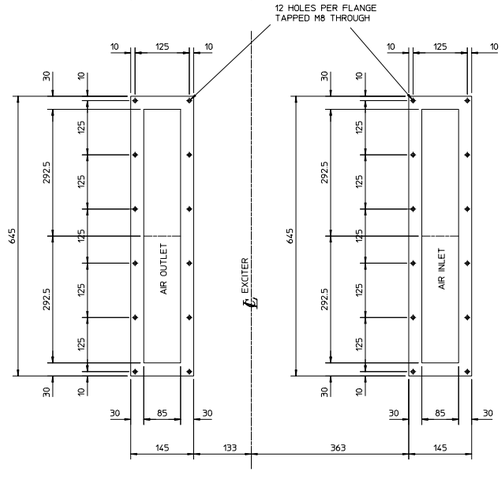

AIR INLET/OUTLET FLANGE DETAIL
AS ARROW 'Y'

WEIGHT	
ARMATURE	= 278 KG
PILOT EXCITER	= 159 KG
MAIN EXCITER	= 726 KG
TOTAL	= 1163 KG

BXF 10-13-3S MAIN EXCITER + MXI 44-07-A1 PILOT EXCITER

ISS	ZONE	MODIFICATION DETAILS	MOD BY	DATE
C		TEMPERATURE DETECTOR HOLES ALTERED FROM 1/2NPS TO RP1/2	AC9	16 APR 2004

THIS DRAWING IS THE PROPERTY OF BRUSH ELECTRICAL MACHINES LTD.(LTD) IT IS SUPPLIED ON LOAN IN CONFIDENCE AND MUST BE RETURNED IMMEDIATELY ON REQUEST. NO PART OF THE DRAWING MAY BE COPIED OR REPRODUCED IN ANY WAY, NOR MAY THE INFORMATION OR DESIGN DEPICTED BE DISCLOSED WITHOUT THE PRIOR WRITTEN CONSENT OF THE OWNER. ALL RIGHTS RESERVED.

BRUSH
BRUSH ENGINEERED MATERIALS INC.
P.O. BOX 18 LOUGHBOROUGH LEICESTERSHIRE LE11 1HJ

WELDING	BSD.927 Lx2	FIRST PROJ	03680	SCALE	1:4	ISS	DATE	09 Jun 2000	CH'D	SAB	ISS	CH'D	AC9
MANUFACTURING TOL	BSD.942 Ld5	DRG REF	317394700			A	DR'N	SAB	APP	NSG	C	APP	NSG
SURFACE TEXTURE	BSD.986 Ls2												

FIRST ANGLE PROJECTION

GENERAL ARRANGEMENT - EXCITER

A0 317705800 ISS O

FRAME CODE BXF 10-13 | SHT 1 OF 1 | DRAWING RANGE 01 TO 02

ME CAD REV 12

WELDING	WCP004
MANUFACTURING TOL	B.S.D.942 L05
SURFACE TEXTURE	B.S.D.986 L62
	FIRST ANGLE PROJECTION

THIS DRAWING IS THE PROPERTY OF BRUSH ELECTRICAL MACHINES LTD.(Ⓒ) IT IS SUPPLIED ON LOAN IN CONFIDENCE AND MUST BE RETURNED IMMEDIATELY ON REQUEST. NO PART OF THE DRAWING MAY BE COPIED OR REPRODUCED IN ANY WAY, NOR MAY THE INFORMATION OR DESIGN DEPICTED BE DISCLOSED WITHOUT THE PRIOR WRITTEN CONSENT OF THE OWNER. ALL RIGHTS RESERVED.

BRUSH
FALCON WORKS, NOTTINGHAM ROAD,
LOUGHBOROUGH, LEICS. LE11 1EX
WWW.BRUSH.EU

MOD DETS	
D	
REDRAWN ON CAD. CIRC WAS W & CHINA. ADD TORQUE VALUE.	
BC	03 APR 2001
E	
NOTE ADDED.	
TW7	28 MAY 2010
ISS A	
DATE	
23 JAN 1992	
DR'N	PS
CH'D	PS
APP	VJB
ISS E	
CH'D	NSG
APP	NSG

HORIZONTAL CLEARANCES ARE TO BE APPROXIMATELY EQUAL.
FOR REFERENCE THE TOTAL MEASURED DIAMETRICAL
Ⓔ CLEARANCE TO BE WITHIN THE DESIGN CLEARANCE.

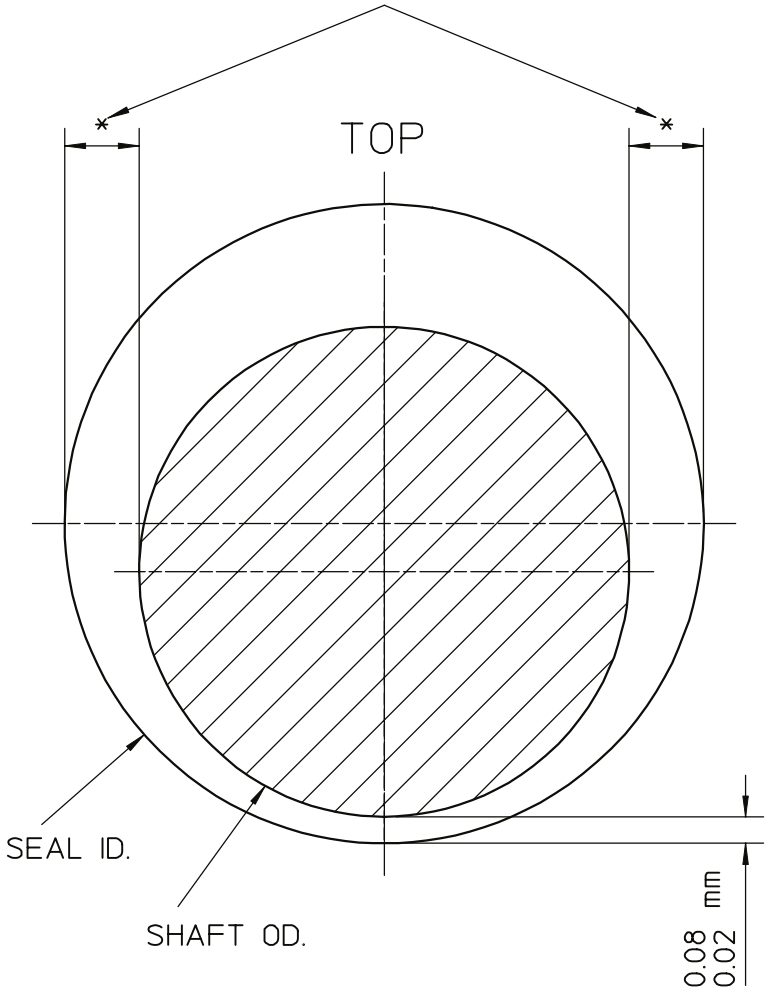

BEARING SEAL SETTING CLEARANCES (MACHINE STOPPED)

SEALS ARE NOT DOWELLED OR LOCATED TO BEARING HOUSINGS. WHEN SEALS ARE REFITTED AFTER REMOVAL, CLEARANCES MUST BE RESET AS SHOWN ABOVE.

SEAL FIXING SCREW TIGHTENING TORQUE IS 45 lbf ft

BEARING SEAL SETTING			E 314461300		ISS E
			DRAWING RANGE		
			SCALE	NTS	SHT 1 OF 1
FRAME CODE	BDAX 7	FIRST PROJ	0161621A	ME CAD REV 13	

GENERAL NOTES

1) FOR DETAILS OF SHAFT SEAL SETTING SEE DRG E3144613-00

2) SEE PS 2717 FOR THE CRIMPING SPECIFICATION FOR LIGHT CABLES.

3) SEE PS 2369 FOR THE CRIMPING OF HEAVIER COMPRESSION TERMINALS

4) SEE P.S.4037 FOR THE ASSEMBLY OF KNIFE EDGED SHAFT SEALS. (207)

5) SEE P.S. 4132 FOR THE ASSEMBLY OF SPHERICAL SEAT BEARINGS.

6) SEE DRAWING 317027100 FOR THE CHECKING OF THE CLEARANCES ON THE SPHERICAL BEARING SEAT.

7) ENSURE THAT THE EARTH LEAD TO THE BEARING BUSH IS POSITIONED AS SHOWN TO AVOID/MINIMISE THE CLEARANCE TO THE ROTOR SHAFT SHOULDER AND HENCE THE AXIAL FLOAT.

8) ALL CABLE CRIMPED ENDS ARE TO BE SEALED TO DRAWING 318686401.

9) UTILIZE THE NATURAL CURVE IN THE FLEXIBLE CONDUIT TO ENSURE A CLEARANCE BETWEEN THE FAN SHROUD AND THE FLEXIBLE CONDUIT. USE LOCTITE 243 (018713-194) ON ALL THE AIR HOSE FITTINGS METALLIC THREADED JOINTS. DO NOT USE LOCTITE ON NYLON THREADS. DISCARD THE NON-METALLIC SEALING WASHER FROM UNDER THE LOCKNUT OF THE FLEXIBLE CONDUIT FITTINGS AND REVERSE THIS LOCKNUT SUCH THAT ITS TEETH ENGAGE INTO THE ALUMINIUM PLATE OR THE INSULATION ADAPTOR. DRIFT THE LOCKNUT TIGHT.

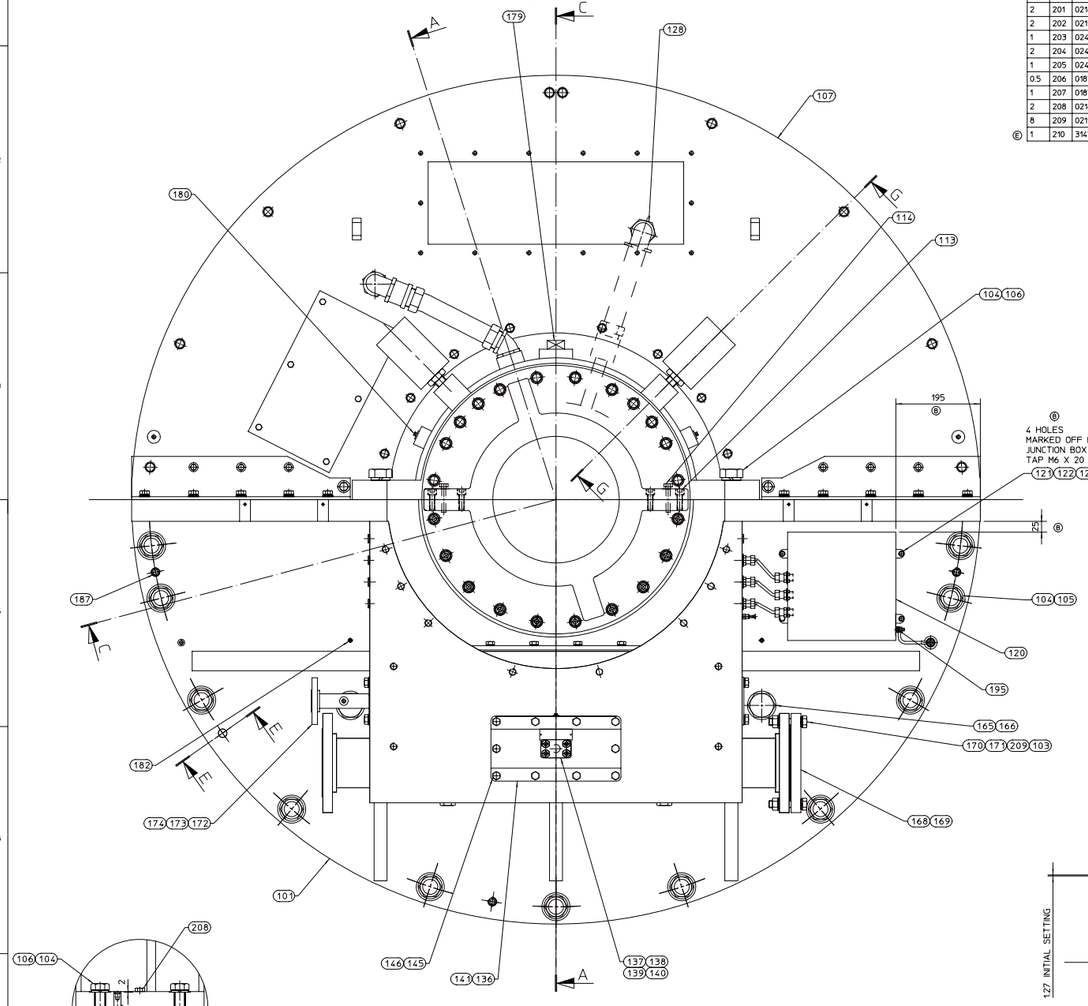

SECTION G-G

AUXILIARY SECTIONAL VIEW THROUGH THE BEARING TOP CAP FLANGE FIXINGS

DOWEL PINS ARE SUPPLIED WITH THE END FRAME



SECTION THOUGH JACKING SCREWS

ø200 BEARING - INSULATED
ø292 SHAFT SEAL

QTY	REF	PART No	DESCRIPTION	MATL	SPEC	CODE No	MATL SIZE	MASS
1	189	317511201	BUSH EARTH CONN	CU				
1	190	025415179	RING TERMINAL	CU			M6 YELLOW.	
1	191	021862128	HEX HEAD SCREW	STL			M6 x 16 LG.	
1	192	021186014	SHAKEPROOF WASHER	STL			M6	
.5MT	193	013473389	EARTH WIRE 16mm2	CU			GREEN & YELLOW.	
1	194	025411106	RING TERMINAL	CU			16mm2 x M10.	
1	195	025411066	RING TERMINAL	CU			16mm2 x M6.	
1	196	314743202	STUD	STL			M10 x 45 LG.	
2	197	021181247	PLAIN WASHER	BR			M10	
3	198	021882266	HEX NUT	BR			M10	
2	199	3177345-01	STAND-OFF ADAPTOR	STL				
1	200	317799901	OIL TRAY ASSEMBLY					
2	201	021862168	HEX HD SCREW	STL			M8 X 16	
2	202	021184416	LOCKWASHER	STL			M8	
1	203	024281803	PLUG	BRASS			3/8" BSP	
2	204	024112418	WASHER				3/8" BSP	
1	205	024235303	BACKNUT	IRON			3/8" BSP	
0.5	206	018713148	LOCTITE 572					
1	207	018711115	JOINT SEALER				HYLOMAR	
2	208	021862289	HEX HEAD SCREW				M16 X 20 LG LG.	
8	209	021181050	PLAIN WASHER	STL			M16	
(E) 1	210	314788302	BEARING SHAFT SEAL GASKET	PERM				

QTY	REF	PART No	DESCRIPTION	MATL	SPEC	CODE No	MATL SIZE	MASS
1	101	320608301	ENDFRAME MACHINING					
2	102	312558402	DOWEL - TOP CAP TO BOTTOM	STL				
8	103	021881270	HEX NUT	STL			M16.	
15	104	021874421	HEX HEAD BOLT	STL			M30 x 80 LG.	
11	105	21181-056	PLAIN WASHER	STL			M30.	
4	106	021184426	SPRING WASHER	SPSTL			M30.	
1	107	320095901	TOP COVER ASSY	STL				
4	108	021184418	SPRING WASHER	SPSTL			M12	
1	109	317706900	BEARING BUSH COMPLETE				200 BORE	
1	110	314149413	BEARING SHAFT SEAL	AL			292 BORE	
1	111	317696801	BEARING SHAFT SEAL	AL			292 BORE.	
1 (E)	112	314788301	BEARING SHAFT SEAL GASKET	PERM				
8	113	021815851	CAP HEAD SCREW WEDGELOK	STL			M12 x 30 LG.	
4	114	02112911O	DOWEL	STL				
7	115	024227441	PLUG	STL			1/8" BSP.	
44	116	314788501	HEX HEAD SCREW TUFLOK	STL			M12 x 40 LG.	
44	117	317658401	INSULATION BUSH					
44	118	021181448	PLAIN WASHER	STL			M12.	
44	119	021189267	DISC SPRING WASHER				M12	
1	120	320204401	TERMINAL BOX ASSEMBLY					
(D) 4	121	021866128	HEX HEAD SCREW	ST ST			M6 X 16 LG.	
(D) 4	122	021184514	SPRING WASHER	ST ST			M6	
(D) 4	123	021181314	PLAIN WASHER	ST ST			M6	
1	124	840013102	BEARING DRAIN RTD				DUPLEX.	
1	125	840013210	BEARING METAL RTD				DUPLEX.	
2	126	318406801	PROXPAC				330801-28-00-265-00-02	
2	127	025564635	STRAIGHT CONNECTOR				MALE 1 1/4" NPT.	
2	128	313104034	90° ANGLE CONNECTOR				1 1/4" NPT.	
1	129	313104024	45° ANGLE CONNECTOR				1 1/4" NPT.	
1	130	313104014	STRAIGHT CONNECTOR				FEMALE 1 1/4" NPT.	
1	131	025384189	CABLE GLAND	BR				
1.5M	132	025564605	FLEXIBLE CONDUIT				1 1/4" NPT.	
1	133	313398516	CONDUIT				1 1/4" NPT.	
1	134	314335501	INSULATION ADAPTOR	NYLON	66			
2	135	024371603	STUD ADAPTOR				1/4" BSP.	
1	136	314417101	ADAPTOR FLANGE					
1	137	314449901	GASKET					
1	138	314449902	COVER PLATE					
4	139	021762169	HEX HEAD SCREW	STL			3/8" UNC X	
4	140	021184417	SPRING WASHER	SPSTL			M10	
1	141	313382718	GASKET					
1	142	320614001	COVER PLATE	STL				
1	143	320614101	COVER PLATE GASKET					
14	144	021862210	HEX HEAD SCREW	STL			M10 x 25 LG.	
10	145	021862218	HEX HEAD SCREW	STL			M10 x 65 LG.	
24	146	021184417	SPRING WASHER	SPSTL			M10.	
1	147	024271104	PLUG				1/2" NPT.	
2	148	313568201	NON-RETURN VALVE				ERMETO.	
2	149	313223717	HOSE ASSEMBLY				650 LG.	
1	150	314096901	STUD ADAPTOR	STL			1" BSP.	
1	151	317779401	HOSE ASSEMBLY				3/4" NB.	
1	152	314097002	SWIVEL ELBOW				3/4" BSP / #22 TUBE.	
1	153	024111426	SEAL WASHER				3/4" BSP.	
6	154	025384182	CABLE GLAND	BR			M16.	
3	155	025545341	MALE BUSH	BR			M16.	
3	156	025555103	LOCKNUT	BR			M16.	
(C) 6	157	024111711	DOWTY LOCK-WASHER				M16.	
2MT	158	314020901	NYLON HOSE				GRIFLEX.	
4	159	314020902	HEX NUT GRIFLEX				1/8" BSP.	
4	160	314020903	DOUBLE BODY UNION GRIFLEX				1/8" BSP.	
4	161	314020904	SHORT STEM GRIFLEX				1/8" BSP.	
4	162	314020905	HOSE CLIP				GRIFLEX.	
2	163	314020906	STRAIGHT ADAPTOR GRIFLEX				1/8" BSP.	
2	164	314020907	PLUG GRIFLEX				1/8" BSP.	
2	165	024281810	PLUG	BR			1 1/2" BSP.	
2	166	024116168	SEAL WASHER	FIBRE			1 1/2" BSP.	
1	167	312513101	ANTI-ROTATION PEG				INSULATED.	
1	168	311584314	BLANK FLANGE	STL			4" NOMINAL BORE.	
1	169	311745727	JOINT WASHER	PERM			4" NOMINAL BORE.	
8	170	021862301	HEX HEAD SCREW	STL			M16 x 80 LG.	
8	171	021184420	SPRING WASHER	SPSTL			M16.	
1	172	317703401	PIPE UNIT INLET	STSTL				
2	173	311745677	JOINT WASHER	PERM			3/4" NOMINAL BORE.	
1	174	024227541	PLUG	STSTL			1/8" BSP	
1	175	311584324	BLANK FLANGE	STL				
4	176	021862250	HEX HEAD SCREW	STL			M12 X 25 LG.	
4	177	021184418	SPRING WASHER	SPSTL			M12	
5	178	025515271	PLUG	STL			M16.	
1	179	024272619	PLUG	FE			2" NPT.	
2	180	024271105	SQUARE HEAD PLUG	STL			3/4" NPT.	
4	181	024281806	PLUG	BR			3/4" BSP.	
1	182	024227441	PLUG	STL			1/8" BSP.	
6	183	024111416	SEAL WASHER				1/4" BSP.	
4	184	024111426	SEAL WASHER				3/4" BSP.	
1	185	312558402	DOWEL - BOTTOM ENDFRAME	STL				
1	186	314726001	GASKET	NEBAR	148			
3	187	021813831	HEX SOCKET GRUB SCREW	STL			M20 x 25 LG.	
1TU	188	018713194	LOCTITE 243					

ISS	ZONE	MODIFICATION DETAILS	MOD BY	DATE
D		SCREWS AND WASHERS HOLDING TERMINAL BOX CHANGED TO STAINLESS STEEL.	KJG3	23 OCT 2012
E		QTY ITEM 112 REDUCED FROM 2 TO 1. ITEM 210 ADDED.	CDB	12 MAR 2013

THIS DRAWING IS THE PROPERTY OF BRUSH ELECTRICAL MACHINES LTD. IT IS SUPPLIED IN HIGH CONFIDENCE AND MUST BE RETURNED IMMEDIATELY ON REQUEST. NO PART OF THE DRAWING MAY BE COPIED OR REPRODUCED IN ANY WAY, NOR MAY THE INFORMATION OR DESIGN DEPICTED BE DISCLOSED WITHOUT THE PRIOR WRITTEN CONSENT OF THE OWNER. ALL RIGHTS RESERVED.

BRUSH
FALCON WORKS, NOTTINGHAM ROAD, LOUGHBOROUGH, LEICS. LE11 1EX. WWW.BRUSH.CO.UK

WELDING	MCP004	FIRST PROJ	19187	SCALE	1:4	ISS	DATE 27 APR 2010 CHD
MANUFACTURING TOL	B.S.D.942 Ld5	DRG REF	320036900			A	DRN CDB APP
SURFACE TEXTURE	B.S.D.986 Le2						
FIRST ANGLE PROJECTION							

1950 KG	BEARING ASSEMBLY - E.E.				
MASS	DESCRIPTION			PART NUMBER	
	BEARING ENDFRAME ASSEMBLY - EE			A0 320625700	ISS E
FRAME CODE	BDAX 6	SHT 1 OF 2	DRAWING RANGE		

CDB	ISS	CHD	CDB
NSG	E	APP	NSG

ME CAD REV 13

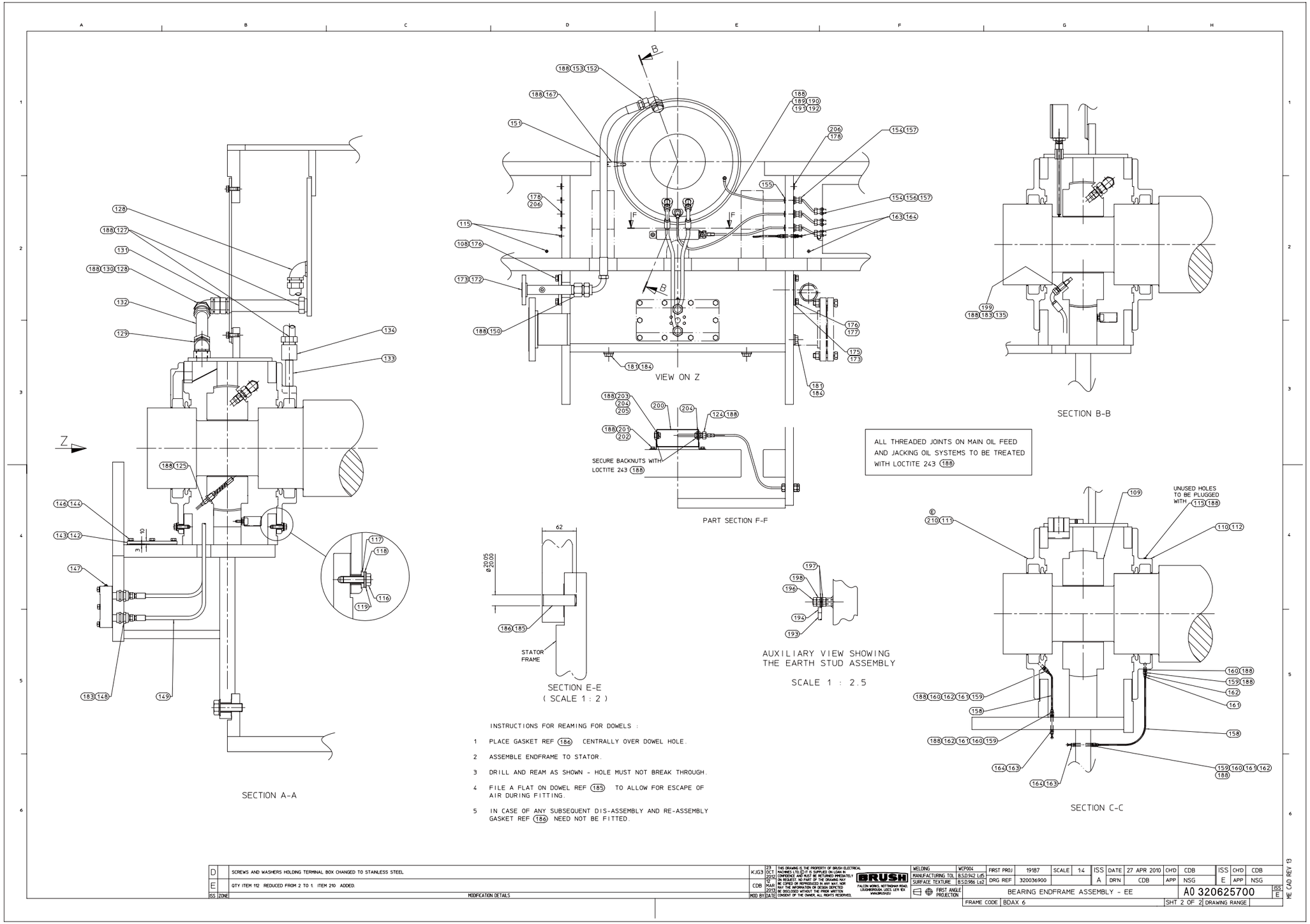
VIEW ON Z
SECTION B-B
PART SECTION F-F
SECURE BACKNUTS WITH LOCTITE 243 (188)
ALL THREADED JOINTS ON MAIN OIL FEED AND JACKING OIL SYSTEMS TO BE TREATED WITH LOCTITE 243 (188)
SECTION A-A
SECTION E-E
(SCALE 1 : 2)
STATOR FRAME
AUXILIARY VIEW SHOWING THE EARTH STUD ASSEMBLY
SCALE 1 : 2.5
UNUSED HOLES TO BE PLUGGED WITH (115)(188)
SECTION C-C
INSTRUCTIONS FOR REAMING FOR DOWELS :
1 PLACE GASKET REF (186) CENTRALLY OVER DOWEL HOLE.
2 ASSEMBLE ENDFRAME TO STATOR.
3 DRILL AND REAM AS SHOWN - HOLE MUST NOT BREAK THROUGH.
4 FILE A FLAT ON DOWEL REF (185) TO ALLOW FOR ESCAPE OF AIR DURING FITTING.
5 IN CASE OF ANY SUBSEQUENT DIS-ASSEMBLY AND RE-ASSEMBLY GASKET REF (186) NEED NOT BE FITTED.
D SCREWS AND WASHERS HOLDING TERMINAL BOX CHANGED TO STAINLESS STEEL
E QTY ITEM 112 REDUCED FROM 2 TO 1. ITEM 210 ADDED.
ISS ZONE MODIFICATION DETAILS
KJG3 23 OCT 2012 12 MAR 2013 MOD BY DATE
THIS DRAWING IS THE PROPERTY OF BRUSH ELECTRICAL MACHINES LTD. IT IS SUPPLIED ON LOAN IN CONFIDENCE AND MUST BE RETURNED IMMEDIATELY ON REQUEST. NO PART OF THE DRAWING MAY BE COPIED OR REPRODUCED IN ANY WAY, NOR MAY THE INFORMATION OR DESIGN DEPICTED BE DISCLOSED WITHOUT THE PRIOR WRITTEN CONSENT OF THE OWNER. ALL RIGHTS RESERVED.
BRUSH
FALCON WORKS, NOTTINGHAM ROAD, LOUGHBOROUGH, LEICS. LE11 1EX WWW.BRUSH.EU
WELDING WCP004
MANUFACTURING TOL B.S.D.942 Lv5
SURFACE TEXTURE B.S.D.986 Lv2
FIRST PROJ 19187 SCALE 1:4
DRG REF 320036900
ISS A DATE 27 APR 2010 CH'D CDB DRN CDB APP NSG
ISS E CH'D CDB APP NSG
FIRST ANGLE PROJECTION
BEARING ENDFRAME ASSEMBLY - EE
A0 320625700
ISS E
FRAME CODE BDAX 6
SHT 2 OF 2 DRAWING RANGE
ME CAD REV 13

GENERAL NOTES

1) FOR DETAILS OF SHAFT SEAL SETTING SEE DRG E3144613-00

2) SEE PS 2717 FOR THE CRIMPING SPECIFICATION FOR LIGHT CABLES.

3) SEE PS 2369 FOR THE CRIMPING OF HEAVIER COMPRESSION TERMINALS

4) SEE P.S.4037 FOR THE ASSEMBLY OF KNIFE EDGED SHAFT SEALS. (220)

5) SEE P.S. 4132 FOR THE ASSEMBLY OF SPHERICAL SEAT BEARINGS.

6) SEE DRAWING 317027100 FOR THE CHECKING OF THE CLEARANCES ON THE SPHERICAL BEARING SEAT.

7) ENSURE THAT THE EARTH LEAD TO THE BEARING BUSH IS POSITIONED AS SHOWN TO AVOID/MINIMISE THE CLEARANCE TO THE ROTOR SHAFT SHOULDER AND HENCE THE AXIAL FLOAT.

8) ALL CABLE CRIMPED ENDS ARE TO BE SEALED TO DRAWING 318686401.

9) UTILIZE THE NATURAL CURVE IN THE FLEXIBLE CONDUIT TO ENSURE A CLEARANCE BETWEEN THE FAN SHROUD AND THE FLEXIBLE CONDUIT. USE LOCTITE 243 (018713-1941) ON ALL THE AIR HOSE FITTINGS METALLIC THREADED JOINTS. DO NOT USE LOCTITE ON NYLON THREADS. DISCARD THE NON-METALLIC SEALING WASHER FROM UNDER THE LOCKNUT OF THE FLEXIBLE CONDUIT FITTINGS AND REVERSE THIS LOCKNUT SUCH THAT ITS TEETH ENGAGE INTO THE ALUMINIUM PLATE OR THE INSULATION ADAPTOR. DRIFT THE LOCKNUT TIGHT.

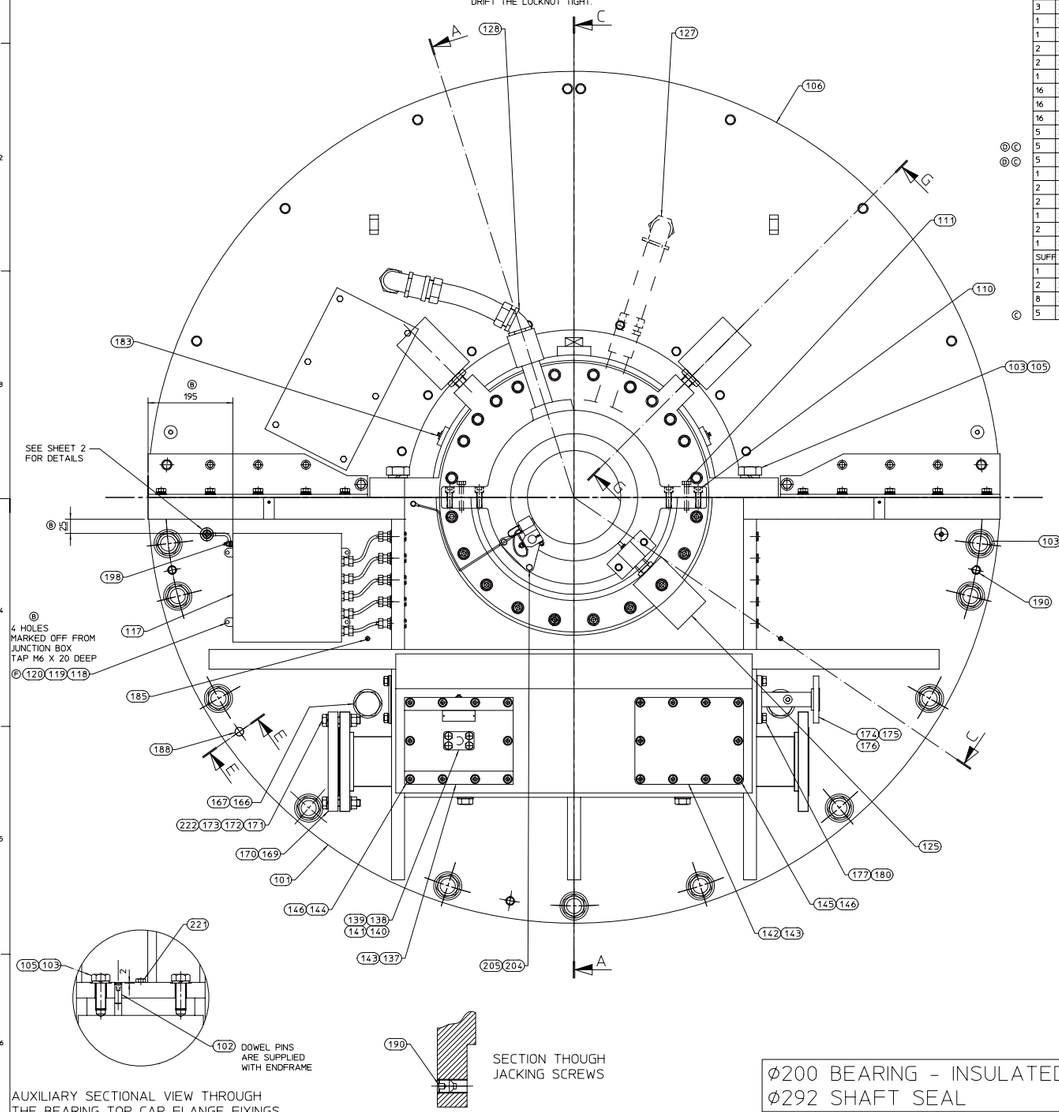

AUXILIARY SECTIONAL VIEW THROUGH THE BEARING TOP CAP FLANGE FIXINGS

SECTION THOUGH JACKING SCREWS

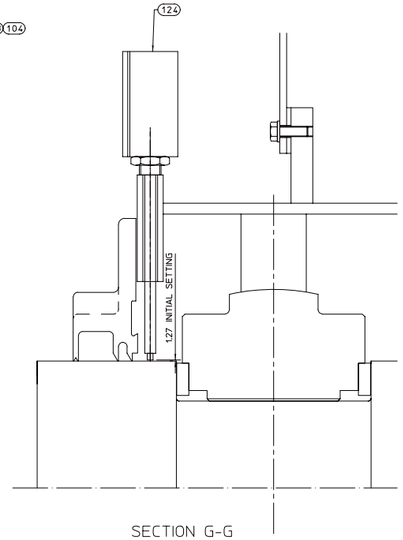

SECTION G-G

QTY	REF	PART No	DESCRIPTION	MATL	SPEC	CODE No	MATL SIZE	MASS
1	189	314726001	GASKET	NEBAR	148			
3	190	021813831	HEX SOCKET GRUB SCREW	STL			M20 x 25 LG.	
1	191	018713194	LOCTITE 243					
1	192	317511201	BUSH EARTH CONN	CU				
1	193	025415179	RING TERMINAL	CU			M6 YELLOW.	
1	194	021862128	HEX HEAD SCREW	STL			M6 x16 LG.	
1	195	021186014	SHAKEPROOF WASHER	STL			M6	
0.5M	196	013474389	EARTH WIRE 16mm2	CU			GREEN & YELLOW.	
1	197	025411106	RING TERMINAL	CU			16mm2 x M10.	
1	198	025411066	RING TERMINAL	CU			16mm2 x M6.	
1	199	314743202	STUD	STL			M10 X 45 LG.	
2	200	021181247	PLAIN WASHER	BR			M10	
3	201	021882266	HEX NUT	BR			M10	
1	202	318965501	EARTHING BRUSHGEAR ASSY					
1	203	318781701	BLOCK TAPPED	STL			KEY PHASOR.	
2	204	021862170	HEX HEAD SCREW	STL			M8 X 25 LG.	
2	205	021184416	SPRING WASHER	SPSTL			M8	
1	206	317715401	COUPLING GUARD SUPPORT	STL				
16	207	314215011	SPACER STUD	STL			M12 x 189 LG.	
16	208	021862250	HEX HEAD SCREW	STL			M12 X 25 LG.	
16	209	021184418	SPRING WASHER	SPSTL			M12	
5	210	022457417	HALF SADDLE CLIP	BRASS				
5	211	021814585	CAP HD SCREW	STL			M4 X 10	
5	212	021184411	LOCK WASHER	STL			M4	
1	213	317799901	OIL TRAY ASSEMBLY					
2	214	021862168	HEX HD SCREW	STL			M8 X 16	
2	215	021184416	LOCKWASHER	STL			M8	
1	216	024281803	PLUG	BRASS			3/8"BSP	
2	217	024112418	WASHER				3/8"BSP	
1	218	024235303	BACKNUT	IRON			3/8"BSP	
SUFF	219	018713148	LOCTITE 572					
1	220	018711115	JOINT SEALER				HYLOMAR	
2	221	021862289	HEX HEAD SCREW	STL			M16 X 20 LG.	
8	222	021181050	PLAIN WASHER	STL			M16	
5	223	021181039	PLAIN WASHER	STL			M3	

QTY	REF	PART No	DESCRIPTION	MATL	SPEC	CODE No	MATL SIZE	MASS
1	101	320610901	ENDFRAME MACHINING	STL				
2	102	312558402	DOWEL - TOP CAP TO BOTTOM	STL				
15	103	021874421	HEX HEAD BOLT	STL			M30 x 80 LG.	
11	104	021181056	PLAIN WASHER	STL			M30.	
4	105	021184426	SPRING WASHER	SPSTL			M30.	
1	106	320110701	TOP COVER ASSY	STL				
1	107	317706700	BEARING BUSH COMPLETE				200 BORE.	
2	108	314149413	BEARING SHAFT SEAL	AL			292 BORE.	
2	109	314788301	BEARING SHAFT SEAL GASKET	PERM				
8	110	021815851	CAP HEAD SCREW WEDGELOK	STL			M12 x 30 LG.	
4	111	021129110	DOWEL	STL				
8	112	024227441	PLUG	STL			1/8" BSP.	
44	113	314788501	HEX HEAD SCREW TUFLOK	STL			M12 x 40 LG.	
44	114	317658401	INSULATION TUBE	NYLON				
44	115	021181448	LARGE DIA PLAIN WASHER	STL			M12	
44	116	021189267	DISC SPRING WASHER				M12	
1	117	317709901	TERMINAL BOX ASSEMBLY					
4	118	021866128	HEX HEAD SCREW	ST.ST	Ⓟ		M6 X 16 LG.	
4	119	021184514	SHAKEPROOF WASHER	ST.ST	Ⓟ		M6	
4	120	021181314	PLAIN WASHER	ST.ST	Ⓟ		M6	
1	121	840013102	BEARING DRAIN RTD				DUPLEX.	
1	122	840013210	BEARING METAL RTD				DUPLEX.	
2	123	840014402	THRUST PAD RTD				DUPLEX.	
2	124	318365101	PROXPAC				330881-28-00-214-00-02	
1	125	318365201	KEY PHASOR				330881-28-11-055-00-02	
2	126	025564635	STRAIGHT CONNECTOR				MALE 1¼" NPT.	
2	127	313104034	90° ANGLE CONNECTOR				1¼" NPT.	
1	128	313104024	45° ANGLE CONNECTOR				1¼" NPT.	
1	129	313104014	STRAIGHT CONNECTOR				FEMALE 1¼" NPT.	
1	130	025384189	CABLE GLAND	BR				
1.5M	131	025564605	FLEXIBLE CONDUIT				1¼" NB.	
1	132	313398516	CONDUIT				1¼" NB.	
1	133	314335501	INSULATION ADAPTOR	NYLON	66			
1	134	313398532	CONDUIT				1¼" NB.	
1	135	317716001	INSULATION ADAPTOR	NYLON	66			
2	136	024371603	STUD ADAPTOR				¼" BSP.	
1	137	314417201	ADAPTOR FLANGE					
1	138	314449901	GASKET					
1	139	314449902	COVER PLATE					
4	140	021762169	HEX HEAD SCREW				3/8" UNC X 1" LG	
4	141	021184417	SPRING WASHER	SPSTL			M10	
1	142	313012410	COVER PLATE	STL				
2	143	313012411	GASKET					
10	144	021862218	HEX HEAD SCREW	STL			M10 x 65 LG.	
10	145	021862210	HEX HEAD SCREW	STL			M10 x 25 LG.	
20	146	021184417	SPRING WASHER	SPSTL			M10.	
1	147	024271104	PLUG				1/2" NPT.	
2	148	319568201	NON-RETURN VALVE				ERMETO.	
1	149	313223719	HOSE ASSEMBLY				700 LG.	
1	150	313223720	HOSE ASSEMBLY				800 LG.	
1	151	314096901	STUD ADAPTOR	STL		ERMETO.	1" BSP.	
1	152	314023412	HOSE ASSEMBLY			ERMETO.	1" BSP.	
1	153	314097001	SWIVEL ELBOW			ERMETO.	1" BSP.	
1	154	314097101	BONDED RUBBER SEAL			ERMETO.	1" BSP.	
10	155	025384182	CABLE GLAND	BR			M16.	
5	156	025545341	MALE BUSH	BR			M16.	
5	157	025555103	LOCKNUT	BR			M16.	
10	158	024111711	DOWTY LOCK-WASHER				M16.	
1MT	159	314020901	NYLON HOSE				GRIFLEX.	
2	160	314020902	HEX NUT GRIFLEX				1/8" BSP.	
2	161	314020903	DOUBLE BODY UNION GRIFLEX				1/8" BSP.	
2	162	314020904	SHORT STEM GRIFLEX				1/8" BSP.	
2	163	314020905	HOSE CLIP				GRIFLEX.	
1	164	314020906	STRAIGHT ADAPTOR GRIFLEX				1/8" BSP.	
1	165	314020907	PLUG GRIFLEX				1/8" BSP.	
2	166	024281810	PLUG	BR			1½" BSP.	
2	167	024116168	SEAL WASHER	FIBRE			1½" BSP.	
1	168	312513101	ANTI ROTATION PEG				INSULATED.	
1	169	311584314	BLANK FLANGE	STL			4" NB.	
2	170	311745727	JOINT WASHER	PERM			4" NB.	
8	171	021874301	HEX HEAD BOLT	STL			M16 x 80 LG.	
8	172	021184420	SPRING WASHER	SPSTL			M16	
8	173	021881270	HEX NUT	STL			M16	
1	174	317703401	PIPE UNIT INLET	STSTL			1" NB.	
2	175	311745677	JOINT WASHER	PERM				
1	176	024227541	PLUG	STSTL			1/8" BSP	
4	177	021862251	HEX HEAD SCREW	STL			M12 X 30 LG.	
1	178	311584324	BLANK FLANGE	STL				
4	179	021862250	HEX HEAD SCREW	STL			M12 x 25 LG.	
4	180	021184418	SPRING WASHER	STL			M12	
4	181	025515271	PLUG	STL			M16.	
1	182	024272619	PLUG	FE			2" NPT.	
2	183	024271105	SQUARE HEAD PLUG	STL			3/4" NPT.	
4	184	024281806	PLUG	BR			3/4" BSP.	
1	185	024227441	PLUG	STL			1/8" BSP.	
6	186	024111416	SEAL WASHER				1/4" BSP.	
4	187	024111426	SEAL WASHER				3/4" BSP.	
1	188	312558402	DOWEL - BOTTOM ENDFRAME	STL				

⌀200 BEARING - INSULATED ⌀292 SHAFT SEAL

1950 KG	BEARING ASSEMBLY - N.E.E.	PART NUMBER
MASS	DESCRIPTION	

ISS	ZONE	MODIFICATION DETAILS	MOD BY	DATE
F		SCREWS AND WASHERS HOLDING TERMINAL BOX CHANGED TO STAINLESS STELL	YSY	15 MAY 2015
E		LOCTITE REMOVED FROM BEING USED BETWEEN THE THRUST PAD RTD AND THE THRUST PAD.	RBS	23 JUL 2011

THIS DRAWING IS THE PROPERTY OF BRUSH ELECTRICAL MACHINES LTD. (C) IT IS SUPPLIED ON LOAN IN CONFIDENCE AND MUST BE RETURNED IMMEDIATELY ON DEMAND. IT MUST NOT BE COPIED OR REPRODUCED IN ANY WAY, NOR MAY THE INFORMATION OR DESIGN DEPICTED BE DISCLOSED WITHOUT THE PRIOR WRITTEN CONSENT OF THE OWNER. ALL RIGHTS RESERVED.

BRUSH
FALCON WORKS, NOTTINGHAM ROAD, LOUGHBOROUGH, LEICS. LE11 1EX
WWW.BRUSH.EU

WELDING	WCP004	FIRST PROJ	19187	SCALE	1:4	ISS	DATE	27 APR 2010	CHD	CDB	ISS CHD YSY
MANUFACTURING TOL	B.S.D.942 Ld5					A	DRN	CDB	APP	NSG	F APP NSG
SURFACE TEXTURE	B.S.D.986 Ls2	DRG REF	320037000								

FIRST ANGLE PROJECTION

BEARING ENDFRAME ASSEMBLY NEE — A0 320625800 — ISS F

FRAME CODE | BDAX 62-170 E | SHT 1 OF 2 | DRAWING RANGE

ME CAD REV 13

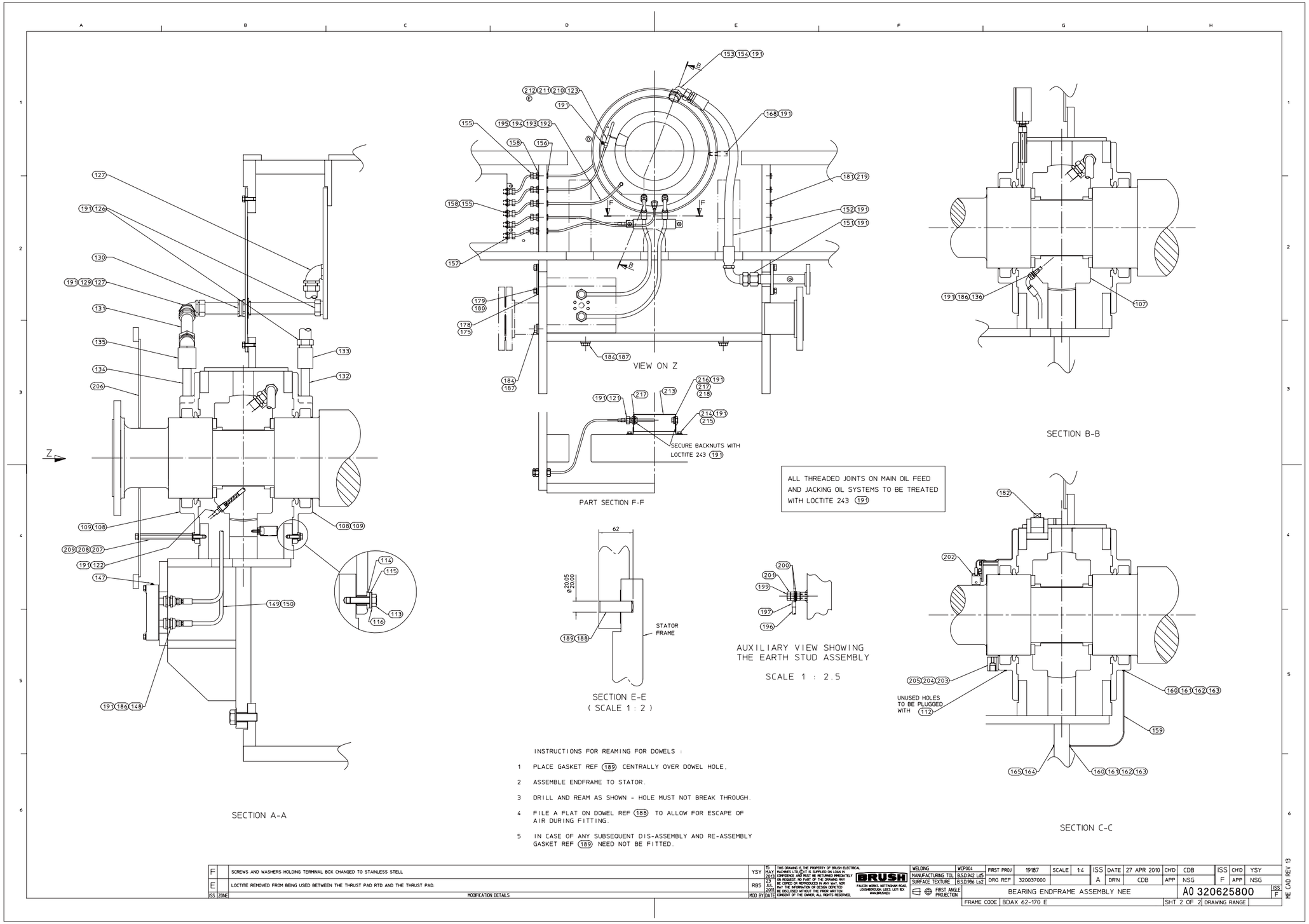
VIEW ON Z
PART SECTION F-F
SECURE BACKNUTS WITH LOCTITE 243 (191)
SECTION B-B
ALL THREADED JOINTS ON MAIN OIL FEED AND JACKING OIL SYSTEMS TO BE TREATED WITH LOCTITE 243 (191)
SECTION A-A
SECTION E-E
(SCALE 1 : 2)
STATOR FRAME
AUXILIARY VIEW SHOWING THE EARTH STUD ASSEMBLY
SCALE 1 : 2.5
UNUSED HOLES TO BE PLUGGED WITH (112)
SECTION C-C
INSTRUCTIONS FOR REAMING FOR DOWELS :
1 PLACE GASKET REF (189) CENTRALLY OVER DOWEL HOLE.
2 ASSEMBLE ENDFRAME TO STATOR.
3 DRILL AND REAM AS SHOWN - HOLE MUST NOT BREAK THROUGH.
4 FILE A FLAT ON DOWEL REF (188) TO ALLOW FOR ESCAPE OF AIR DURING FITTING.
5 IN CASE OF ANY SUBSEQUENT DIS-ASSEMBLY AND RE-ASSEMBLY GASKET REF (189) NEED NOT BE FITTED.
F SCREWS AND WASHERS HOLDING TERMINAL BOX CHANGED TO STAINLESS STELL
E LOCTITE REMOVED FROM BEING USED BETWEEN THE THRUST PAD RTD AND THE THRUST PAD.
ISS ZONE MODIFICATION DETAILS
YSY 15 MAY 2013 23 JUL 2011 MOD BY DATE
THIS DRAWING IS THE PROPERTY OF BRUSH ELECTRICAL MACHINES LTD. IT IS SUPPLIED ON LOAN IN CONFIDENCE AND MUST BE RETURNED IMMEDIATELY ON REQUEST. NO PART OF THE DRAWING MAY BE COPIED OR REPRODUCED IN ANY WAY, NOR MAY THE INFORMATION OR DESIGN DEPICTED BE DISCLOSED WITHOUT THE PRIOR WRITTEN CONSENT OF THE OWNER. ALL RIGHTS RESERVED.
BRUSH
FALCON WORKS, NOTTINGHAM ROAD, LOUGHBOROUGH, LEICS. LE11 1EX
WWW.BRUSH.EU
WELDING WCP004
MANUFACTURING TOL B.S.D.942 Ld5
SURFACE TEXTURE B.S.D.986 Ls2
FIRST ANGLE PROJECTION
FIRST PROJ 19187
DRG REF 320037000
SCALE 1:4
ISS A DATE 27 APR 2010 DRN CDB CHD CDB APP NSG
ISS F CHD YSY APP NSG
BEARING ENDFRAME ASSEMBLY NEE
A0 320625800
ISS F
FRAME CODE BDAX 62-170 E
SHT 2 OF 2 DRAWING RANGE
ME CAD REV 13

QTY	QTY	REF	PART No	DESCRIPTION	MATL	SPEC	CODE No	MATL SIZE	MASS
-	X	01		OIL SERVICE ASSY				NON EXCITER END	
X	-	02		OIL SERVICE ASSY				EXCITER END	
-	1	03	3177177-01	PIPE UNIT	STSTL				
1	-	04	3177177-02	PIPE UNIT	STSTL				
2	2	05	3117457-30	GASKET					
4	4	06	21866-256	HEX HD SCREW	STSTL			M12 x 55LG	
4	4	07	21881-868	HEX NUT	STSTL			M12	
2	2	08	24227-541	PLUG	STSTL			1/8" BSP	
1	1	09	25565-883	PLUG	STSTL			3/4" NPT	
-	1	10	3138475-75	ORIFICE PLATE	STSTL			ø13 BORE	
1	-	11	3138475-67	ORIFICE PLATE	STSTL			ø9 BORE	
8	8	12	021181-318	PLAIN WASHER	STSTL			M12	

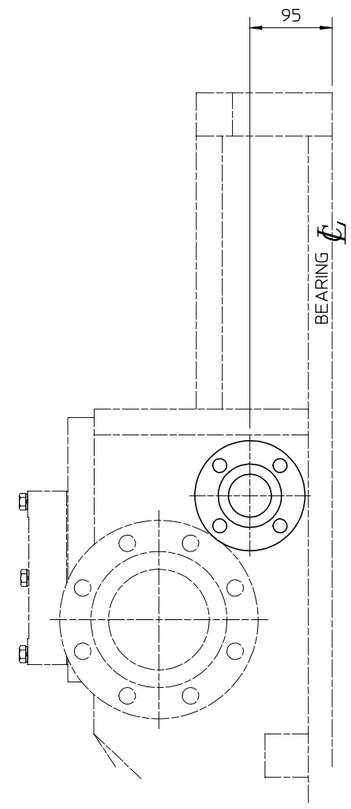

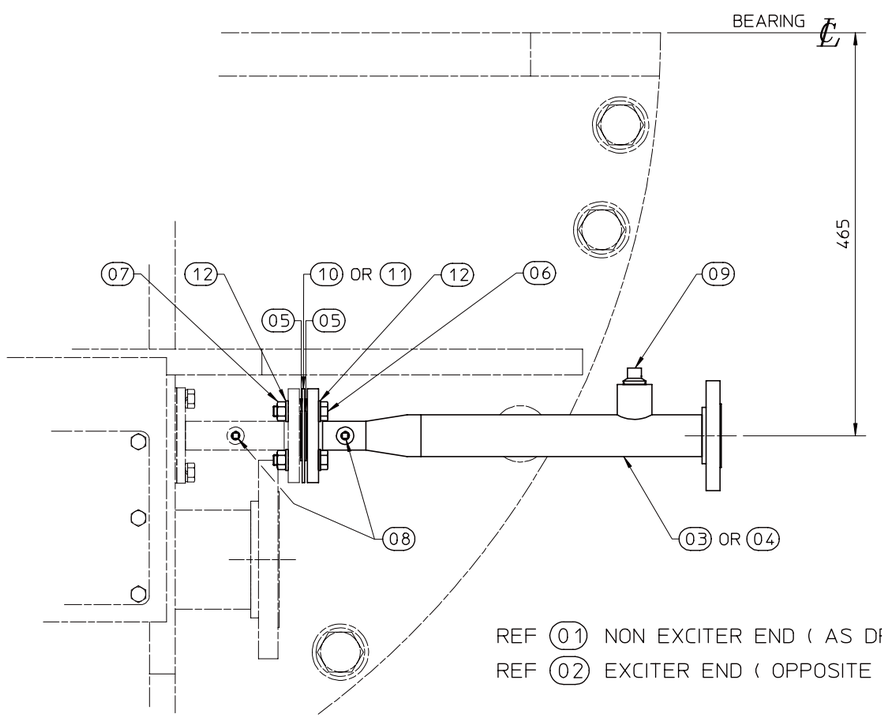

REF (01) NON EXCITER END (AS DRAWN)
REF (02) EXCITER END (OPPOSITE HAND)

ISS	ZONE	MODIFICATION DETAILS	MOD BY	DATE
C		ITEMS 06 TO 09 INCLUSIVE CHANGED FROM CARBON STEEL TO STAINLESS.ITEMS 12 ADDED.	RB5	28 JUL 2011
B		~~GASKET REF# 035 WAS 3117457-022~~	DKH	24 APR 2001

THIS DRAWING IS THE PROPERTY OF BRUSH ELECTRICAL MACHINES LTD. © IT IS SUPPLIED ON LOAN IN CONFIDENCE AND MUST BE RETURNED IMMEDIATELY ON REQUEST. NO PART OF THE DRAWING MAY BE COPIED OR REPRODUCED IN ANY WAY, NOR MAY THE INFORMATION OR DESIGN DEPICTED BE DISCLOSED WITHOUT THE PRIOR WRITTEN CONSENT OF THE OWNER. ALL RIGHTS RESERVED.

BRUSH
FALCON WORKS, NOTTINGHAM ROAD, LOUGHBOROUGH, LEICS, LE11 1EX
WWW.BRUSH.EU

WELDING	WCP004
MANUFACTURING TOL	B.S.D.942 Ld5
SURFACE TEXTURE	B.S.D.986 Ls2
FIRST ANGLE PROJECTION	

FIRST PROJ	03861	SCALE	1:4	ISS A	DATE	19 Jul 2000	CH'D	RC	ISS C	CH'D	RB5
DRG REF	317687400				DR'N	RC	APP	NSG		APP	DAP

OIL SERVICE PIPEWORK ASSEMBLY

C 317718800 ISS C

FRAME CODE: ALL DAX | SHT 1 OF 1 | DRAWING RANGE

ME CAD REV 13

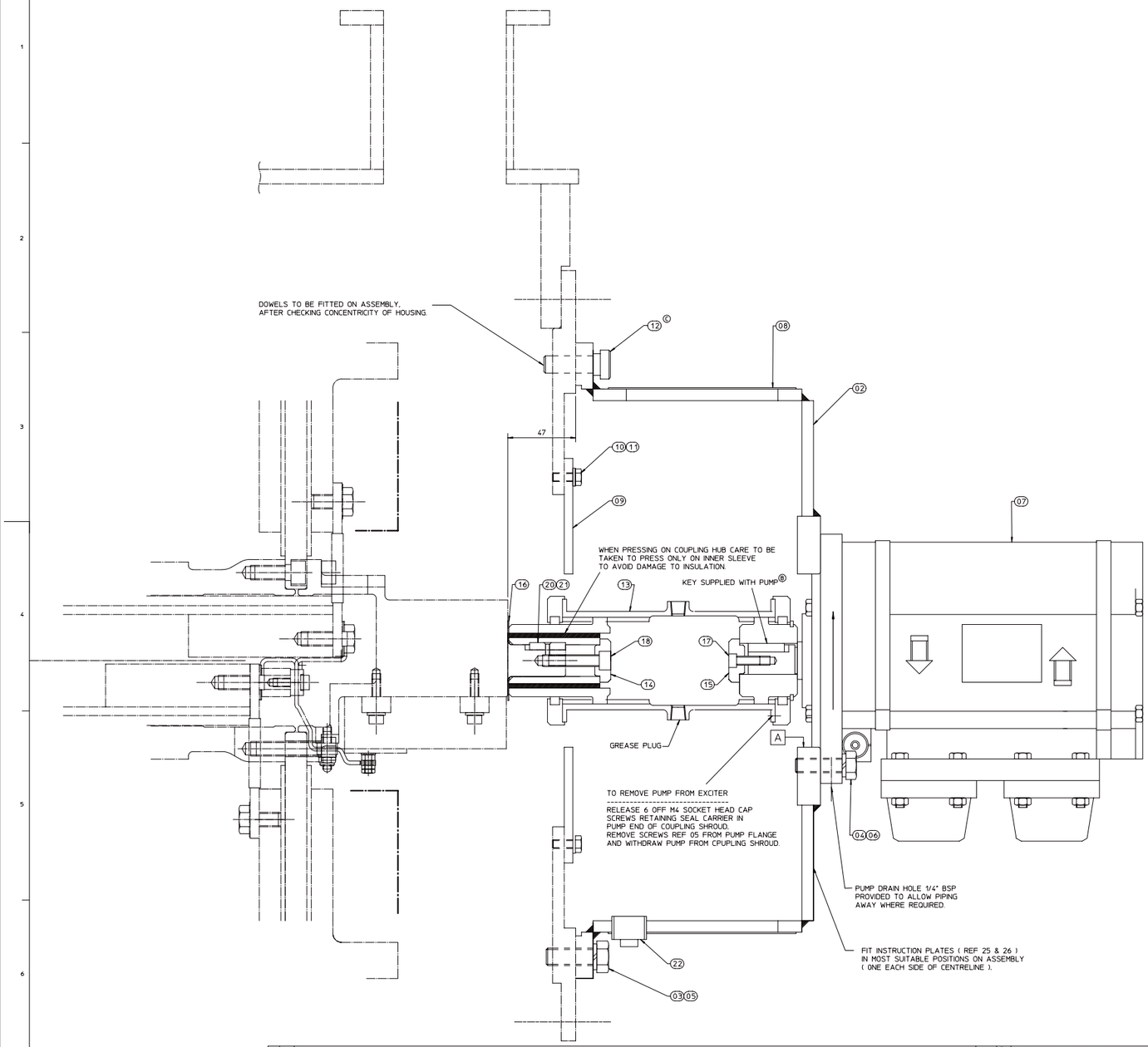

	QTY	REF	PART No	DESCRIPTION	MATL	SPEC	CODE No	MATL SIZE	MASS
		01		PUMP ASSEMBLY				ANTI-CLOCKWISE ON DE	
	1	02	3138288-01	PUMP HOUSING MCG					
	8	03	21862-252	HEX SCREW	STL	8.8		M12 x 35 LG	
	4	04	21862-212	HEX SCREW	STL	8.8		M10 x 35 LG	
	8	05	21184-418	SPRING WASHER	STL			M12	
	4	06	21184-417	SPRING WASHER	STL			M10	
	1	07	3179467-01	OIL PUMP				ACE 038	
	1	08	3133562-01	COVER COMPLETE					
	1	09	3173675-01	AIR BAFFLE PLATE	STL				
	10	10	21862-128	HEX SCREW	STL	8.8		M6 x 16 LG	
	10	11	21181-044	PLAIN WASHER	STL	8.8		M6	
C	2	12	3204876-01	DOWEL PIN	STL				
	1	13	3179473-01	INSULATE GEAR COUPLING					
	1	14	3138301-01	CLAMP PLATE	STL				
	1	15	3179476-01	CLAMP PLATE	STL				
	1	16	1344564-05	INS WASHER					
	1	17	21815-109	SOCKET CAP SCREW	HT ST			M5 x 20 LG	
	1	18	21815-172	SOCKET CAP SCREW	HT ST			M8 x 35 LG	
	.12K	19	17651-202	GREASE					
B	1	20	21844-065	CSK HD SCREW				M3 x 10	
	1	21	3141639-01	KEY	STL			6 x 5 x 25 LG	
	1	22	25515-273	PLUG	STL			M25	
	SUFF	23	18713-136	LOCKING COMPOUND					
	1	24	3170235-02	INSTRUCTION PLATE	ST.ST				
	1	25	3145015-22	INSTRUCTION PLATE	ST.ST				
	6	26	21276-324	DRIVE SCREW	ST.ST			M02 X 6.5	

COUPLING LUBRICATION

ON ASSEMBLY THE COUPLING SHROUD MUST BE
PART FILLED WITH GREASE REF 20 (0.12KG APPROX)
INTERNAL AND EXTERNAL TEETH MUST BE WELL COATED
AND A SMALL AMOUNT OF GREASE APPLIED TO THE SEALS.

BORE MARKED A TO BE CLOCKED RELATIVE TO
DRIVE STUB SHAFT AND CONCENTRICITY ADJUSTED
PRIOR TO DOWELLING PUMP HOUSING REF 02.

CAP SCREWS & C'SUNK SCREWS TO BE LOCKED
WITH LOCKING COMPOUND REF 24.

BX 05 & 10 WITH ACE 038 PUMP
AND INFRA-RED TRANSMITTER

ISS	ZONE	MODIFICATION DETAILS	MOD BY	DATE
C		DOWEL (REF 12) CHANGED TO HEADED DOWEL	KJG3	15 JAN 2010
B		KEY AND SCREW REMOVED - NOTE ADDED STATING KEY SUPPLIED WITH PUMP	KJG3	08 OCT 2009

THIS DRAWING IS THE PROPERTY OF BRUSH ELECTRICAL MACHINES LTD.© IT IS SUPPLIED ON LOAN IN CONFIDENCE AND MUST BE RETURNED IMMEDIATELY ON REQUEST. NO PART OF THE DRAWING MAY BE COPIED, REPRODUCED OR TRANSMITTED NOR MAY THE INFORMATION OR DESIGN CONTAINED BE DISCLOSED WITHOUT THE PRIOR WRITTEN CONSENT OF THE OWNER. ALL RIGHTS RESERVED.

BRUSH
FALCON WORKS, NOTTINGHAM ROAD,
LOUGHBOROUGH, LEICS. LE11 1EX
WWW.BRUSH.EU

WELDING	WCP004	FIRST PROJ	03864	SCALE	1:1	ISS	DATE	05 Mar 2002	CHD	RC7	ISS	CHD	KJG3		
MANUFACTURING TOL	B.S.D.942 Lvl5					A	DRN	RC7	APP	NSG	C	APP	NSG		
SURFACE TEXTURE	B.S.D.986 La2	DRG REF	317367700												
FIRST ANGLE PROJECTION		PUMP ASSEMBLY				A0 317947700								ISS C	
		FRAME CODE	BXF 10			SHT 1 OF 1	DRAWING RANGE								

ME CAD REV 13

C 3138059 | ISSUE A F G H | FIRST ANGLE PROJECTION | SIZE 420 x 594

QTY	REF	PART No.	DESCRIPTION	MATL.	SPEC	CODE No.	MATL SIZE
	01		ROTOR CLAMP ASSY.				
1	02	B3138013-**	" " MACH.				** SEE L.O.A. FOR REF.
6	03	21862-256	HEX. HD. SCREW	STL			M12 × 55 LG.
6	04	21181-448	PLAIN WASHER	"			M12
6	05	21184-318	LOCKWASHER	"			M12
1	06	E3129897-64	LABEL	ST.STL.			SEE NOTE 7
4	07	21276-324	DRIVE SCREW	" "			NO. 2 × 6.5 LG.
(H) ~~SUFF~~	~~08~~	~~17621-394~~	~~MOBIL VACTRA NO. 4 OIL~~				
(H) ~~SUFF~~	~~09~~	~~" -302~~	~~" MOBILARMA 522~~				

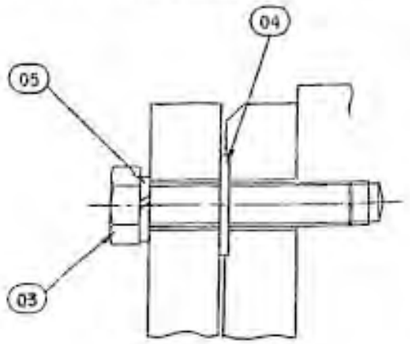

PART SECTION C-C
SCALE FULL SIZE

POSITION LABEL CENTRALLY ON CLAMP M.O. AND DRILL 4-HOLES Ø 2.2 × 10 DP. FOR DRIVE SCREWS.

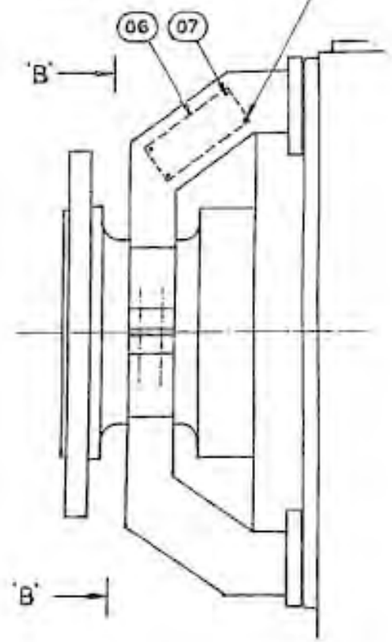

VIEW ON ARROW 'A'

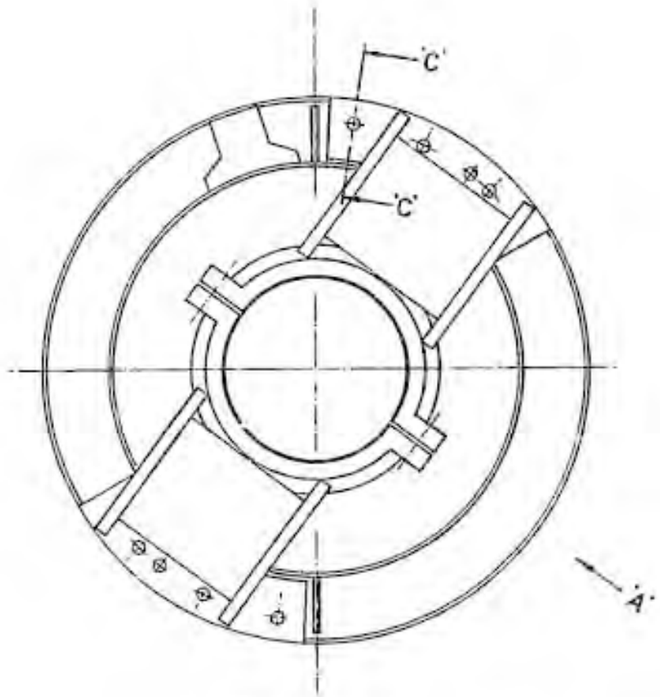

SECTION 'B-B'

(H)
NOTE INSTRUCTIONS:

1. FOR PROTECTION AND LUBRICATION OF BEARINGS AND CLAMP DURING ERECTION FOR DESPATCH SEE PS2877 SECT. 4.1
2. ALL COMPONENTS REMOVED TO FIT THIS ASSEMBLY ARE TO BE PACKED AND IDENTIFIED FOR REFITTING AT SITE.
3. ENSURE CLAMP IS TIGHT FIT ALL AROUND CIRCUMFRENCE OF SHAFT WITH NO GAPS WHEN FULLY CLAMPED.
4. LABEL REF. 07 READS: WARNING, REMOVE CLAMP BEFORE TURNING ROTOR.

WEIGHT = 28 kg APPROX

CODE

REV		NAME	DATE
H	REF. 08 & 09 DELETED & NOTES REVISED.		3/1/90
G	TWO EXTRA HOLES ADDED IN REF. 02 - NOW CLAMP CAN BE USED ON BOTH TYPES OF SEAL		18 JULY 90
F	REFS. 06, 07, 08, 09 ADDED WITH ASSOCIATED NOTES. REDRAWN FROM D3138059E	T. R. M.	21/2/62

'C' + PRINTS TO CIRCULATION

This drawing is confidential and the copyright of BRUSH ELECTRICAL MACHINES LIMITED © 1988 LOUGHBOROUGH ENGLAND
It must not be copied or passed to a 11 - 4 party without written consent

BRUSH — BRUSH ELECTRICAL MACHINES

MANUFACTURING TOLS TO BSD 942 Lv5
WELDING TO BSD 971 Lv7
SURFACE TEXTURE TO BSD 986 Lv7

TH CONT No	01/36323A	DR'N G.P.	APP
STD OR SPEC		CH'D G.P.	DATE 12-1-88
DRG REF			

SCALE — DEPT TURBO-CON

ROTOR CLAMP ASSEMBLY

C 3138059

ISSUE A F G H

VL M No 5002/87

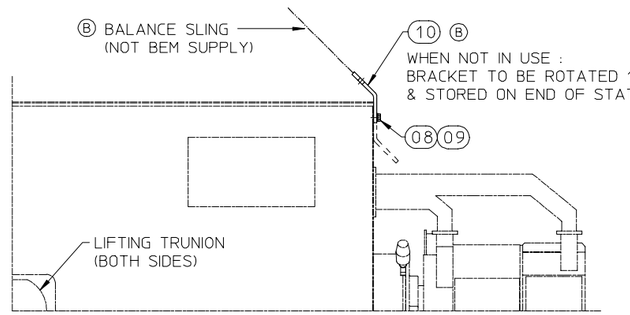

ASSY REF 01 FRAME 7 - TOP UNIT REMOVED

	QTY	QTY	QTY	REF	PART No	DESCRIPTION	MATL	SPEC	CODE No	MATL SIZE	MASS
	–	–		01		SLING BRACKET ASSEMBLY					
	–			02		SLING BRACKET ASSEMBLY					
		–	–	03		SLING BRACKET ASSEMBLY					
	–	1	–	04	3174366-01	SLING BRACKET	STL				
	–	3	–	05	21862-255	HEX HEAD SCREW	STL			M12 x 50 lg	
	–	3	–	06	21181-048	PLAIN WASHER	STL			M12	
	1	–	–	07	3174378-**	SLING BRACKET	STL			SEE TABLE FOR REF	
	4	–	2	08	21862-377	HEX HEAD SCREW	STL			M24 x 60 lg	
	4	–	2	09	21181-054	PLAIN WASHER	STL			M24	
Ⓑ	–	–	1	10	3177377-01	SLING BRACKET	STL				

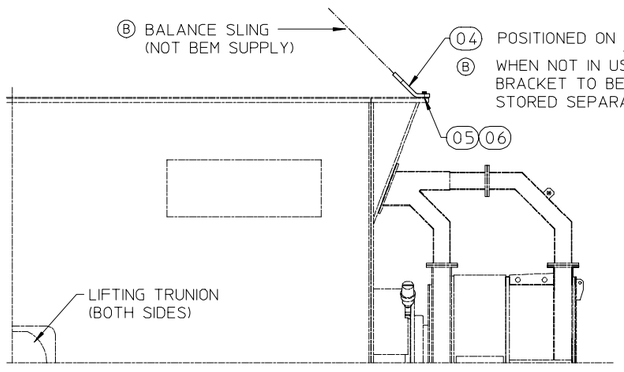

ASSY REF 02 FRAME 8 - TOP UNIT REMOVED

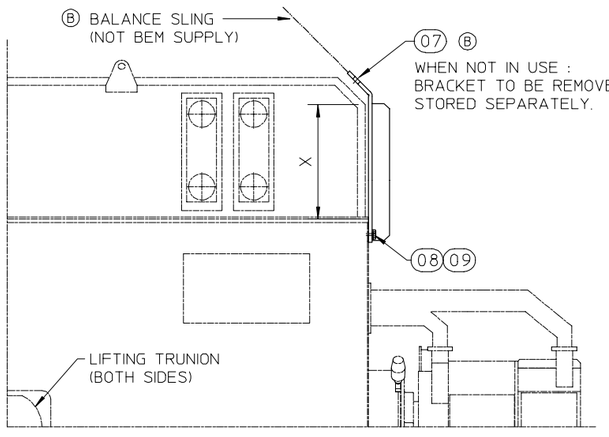

ASSY REF 03 FRAME 7 - COOLER FITTED

SLING BRACKET PART No	DIMENSION "X" MIN	DIMENSION "X" MAX
3174378-01	360	509
3174378-02	510	659
3174378-03	660	809
3174378-04	810	959
3174378-05	960	1109
3174378-06	1110	1259

NOTE Ⓑ

THE BALANCE SLING IS MADE UP OF A SLING ATTACHED TO THE CRANE HOOK AND A CHAIN BLOCK OR TURFOR (TO ADJUST THE LENGTH) WHICH IS ATTACHED TO THE BRACKET ON THE GENERATOR.
MINIMUM RATING OF CHAIN BLOCK / TURFOR = 10 TONNES.

LIFTING PROCEDURE Ⓑ

THE GENERATOR IS TO BE LIFTED WITH SLINGS ON THE GENERATOR TRUNIONS - THE BALANCE SLING SHOULD BE FITTED BUT LEFT LOOSE.
WITH THE WEIGHT OF THE GENERATOR TAKEN BY THE CRANE THE CHAIN BLOCK / TURFOR IS THEN ADJUSTED TO TIGHTEN THE BALANCE SLING AND BRING THE GENERATOR LEVEL BEFORE FINAL LIFT.

SLING BRACKETS AND ASSOCIATED FIXINGS ARE SUPPLIED WITH ALL MACHINES.

ISS	ZONE	MODIFICATION DETAILS	MOD BY	DATE
B		REF 10 ADDED FOR ASSY 01. SLING AND LIFTING NOTES ADDED BRKT STORAGE NOTES ADDED.	RK	06 06 2001

CIRCULATION C
ADDL PRINTS

THIS DRAWING IS THE PROPERTY OF BRUSH ELECTRICAL MACHINES LTD.© IT IS SUPPLIED ON LOAN IN CONFIDENCE AND MUST BE RETURNED IMMEDIATELY ON REQUEST. NO PART OF THE DRAWING MAY BE COPIED OR REPRODUCED IN ANY WAY, NOR MAY THE INFORMATION OR DESIGN DEPICTED BE DISCLOSED WITHOUT THE PRIOR WRITTEN CONSENT OF THE OWNER. ALL RIGHTS RESERVED.

HAWKER SIDDELEY
BRUSH ELECTRICAL MACHINES
P.O. BOX 18 LOUGHBOROUGH
LEICESTERSHIRE LE11 1HJ

WELDING	B.S.D.927 Lx2	FIRST CONT	FUTURE	SCALE	1:20
MANUFACTURING TOL	B.S.D.942 Ld5	STD OR SPEC	.	DEPT	DAX
SURFACE TEXTURE	B.S.D.986 Ls2	DRG REF			

FIRST ANGLE PROJECTION

ISS	DATE	CH'D	ISS	CH'D
A	26.01.1998	PJS	B	RK
DR'N PJS		APP PME		APP NSG

SLING BRACKET ASSEMBLY

C 3174371 ISS B

CODE | SHT 1 OF 1 | DRAWING RANGE

1:1 0 50 100 | 1:1.5 0 50 100 | 1:2.5 0 100

ME CAD REV 7.1

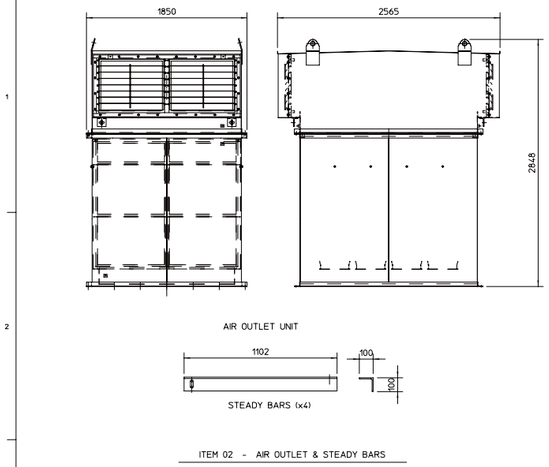

ITEM 02 - AIR OUTLET & STEADY BARS

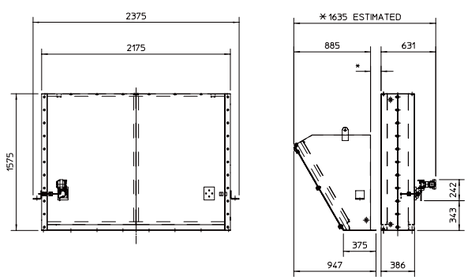

ITEM 03 - AIR INLET ASSEMBLY (NEE)

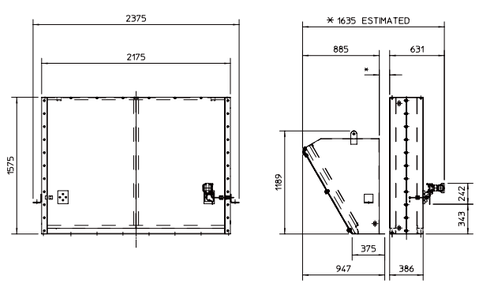

ITEM 04 - AIR INLET ASSEMBLY (EE)

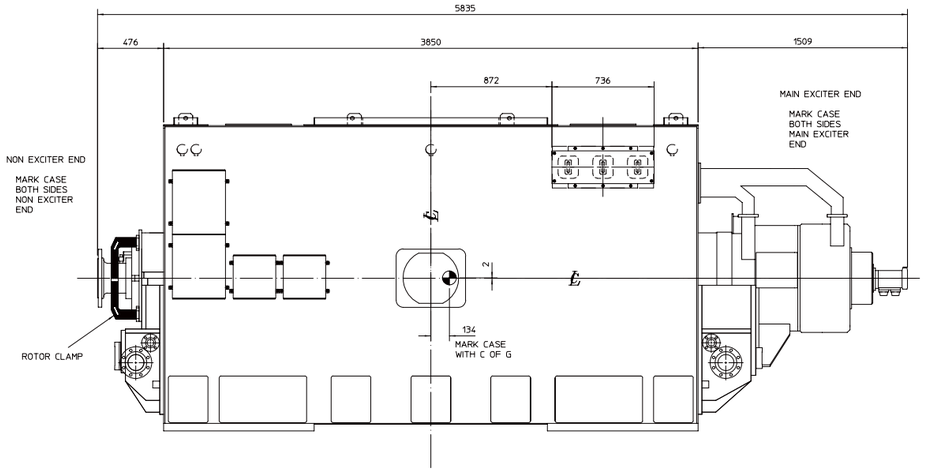

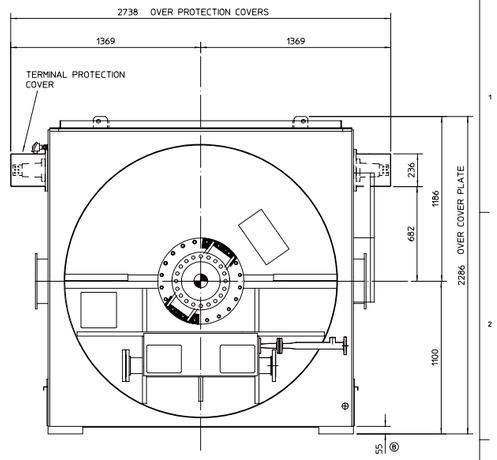

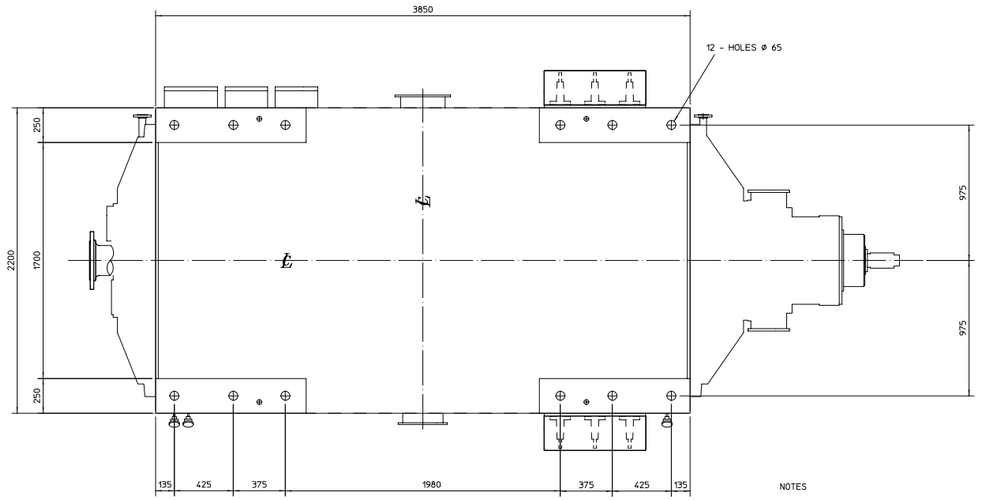

VIEW ON UNDERSIDE SHOWING FEET

CASE 'A' - GENERATOR AND LOOSE DETAILS

PACKING CASE INFORMATION								
ITEM NO	IDENT LETTER	PRINCIPLE CONTENTS	CASE	SEAT BAG	UNPACKED DIMENSIONS LENGTH	WIDTH	HEIGHT	NETT WEIGHT (Kg)
01	A	GENERATOR & LOOSE DETS	YES	YES	5835	2738	2286	40500
02	B	AIR OUTLET & STEADY BARS	YES	NO	2570	1850	2850	1774
03	C	AIR INLET (N.E.E.)	YES	NO	2375	1635	1575	635
04	D	AIR INLET (E.E.)	YES	NO	2375	1635	1575	635
05	E							
06	F							

NOTES

1. PACKING CASE IDENTIFICATION LETTER 'A' - A.C. GENERATOR, PACKING FOR EXPORT SHIPPING GENERALLY TO BS 1133 AND B.E.M. TDI 147 METHOD 2. PACKING SPECIFICATION MS 7032.
2. G.A. OF ALL PACKAGES TO BE SUPPLIED BY PACKERS. PACKERS TO ADVISE NUMBER AND SIZE OF ALL PACKAGES.
3. PACKING CASE (PACKAGE) IDENTIFICATION LETTER,'C of G' AND SLING MARKS TO BE STENCILLED ON PACKING CASE.
4. MAXIMUM HEIGHT OF PACKING CASE INCLUSIVE OF ANY LIFTING FEATURES MUST NOT EXCEED 4040mm.
5. WHEN MORE THAN ONE CASE IS REQUIRED FOR A PRINCIPAL PART THEY WILL HAVE THE SAME IDENTIFICATION LETTER AS THE PRINCIPAL PART.
6. LOOSE DETS TO BE PACKED IN CASE 'A' WITH THE GENERATOR, SHOULD BE PRE-PACKAGED AND BOXED. THE BOX(ES) TO BE SECURED TO THE PACKING CASE FLOOR.

NOTES PARTICULAR TO REF 02,03 & 04 AIR INLET AND OULET DUCTS ITEMS 'B','C' & 'D'

1. FILTERS TO BE REMOVED, TO BE TRANSPORTED/STORED SEPARATELY.
2. AIR INLET AND OUTLET LOUVRES AND ALL OPENINGS TO BE SECURELY COVERED. PRESSURE SWITCHES, AND ANY VULNERABLE EQUIPMENT TO BE FULLY PROTECTED FROM DAMAGE DURING SHIPMENT.

NOTES PARTICULAR TO REF 05 FILTERS PACKING ITEM 'E'

1. THESE FILTERS REQUIRE TO BE PACKED /STORED / TRANSPORTED IN ACCORDANCE WITH THE MANUFACTURER'S INSTRUCTIONS.
2. THESE INSTRUCTIONS WILL BE ADVISED WHEN AVAILABLE.

ISS	ZONE	MODIFICATION DETAILS	MOD BY	DATE
B		HEIGHT OF THE STATOR FOOT ADDED.	CDB	17 AUG 2010
C		GENERATOR GENERAL ARRANGEMENTS NOTE REMOVED.	MMO	01 FEB 2013

THIS DRAWING IS THE PROPERTY OF BRUSH ELECTRICAL MACHINES LTD.© IT IS SUPPLIED ON LOAN IN CONFIDENCE AND MUST BE RETURNED IMMEDIATELY ON REQUEST. NO PART OF THIS DRAWING MAY BE COPIED OR REPRODUCED IN ANY FORM NOR MAY THE INFORMATION OR DESIGN DEPICTED BE DISCLOSED WITHOUT THE PRIOR WRITTEN CONSENT OF THE OWNER. ALL RIGHTS RESERVED.

BRUSH
FALCON WORKS, NOTTINGHAM ROAD, LOUGHBOROUGH, LEICS. LE11 1EX
www.brushgen.co.uk

WELDING	WCP004	FIRST PROJ	18204	SCALE	1:12.5	ISS	DATE	01 APR 2010	CHD	CDB	ISS	CHD	NSG
MANUFACTURING TOL	B.S.D.942 Ld5												
SURFACE TEXTURE	B.S.D.986 Ls2	DRG REF	317709600			A	DRN	CDB	APP	NSG	C	APP	NSG
FIRST ANGLE PROJECTION													

PACKING DETAILS

A0 320603400 ISS C

FRAME CODE | BDAX 62-170ER | SHT 1 OF 1 | DRAWING RANGE | 01 TO 06

ME CAD REV 13

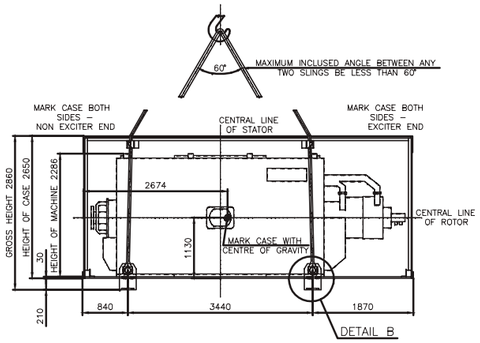

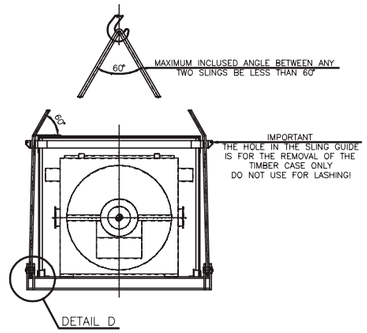

DETAIL A

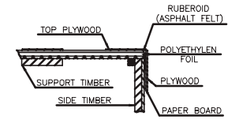

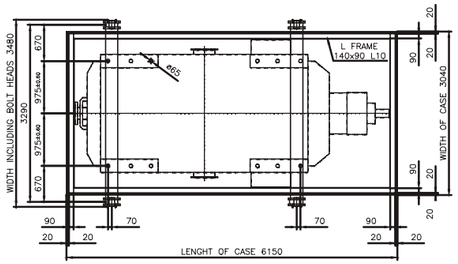

DETAIL B

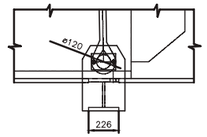

DETAIL D

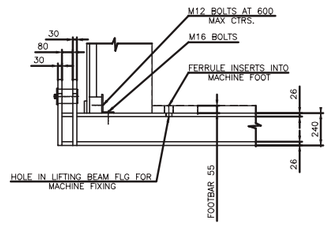

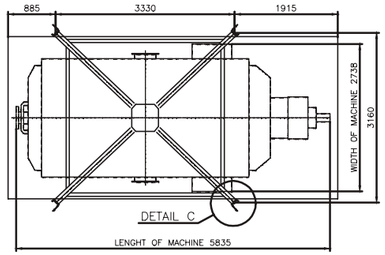

DETAIL C
M 1:20

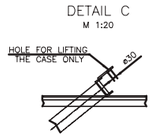

WRAPPING AND PACKAGE ACCORDING TO TDI147, MS7032, PS4045

Packing information

Item No	Ident Letter	Principle Contens	Case	Supplied	Sheet bag	Packing dimensions Lenght	Widht	Height	Weight (kg) Nett	Gross
01	A	GENERATOR&LOOSE DETS	YES	by SEM	YES	6150	3480	2860	40500	44500

Tolerance ?SN ISO 8015 Precision ?SN ISO 2768 mK	Date	07.01.2011
	Drawn	CERVENKA TOMAS
	Approved	ANDRLIK JAN
	Printed	
	Scale	1:50
	Weight	4000 KG
	Material	
	Type	BDAX62-170ER
	Note	

THIS DRAWING IS THE PROPERTY OF BRUSH SEM s.r.o.Ⓒ IT IS SUPPLIED ON LOAN IN CONFIDENCE AND MUST BE RETURNED IMMEDIATELY ON REQUEST. NO PART OF THE DRAWING MAY BE COPIED OR REPRODUCED IN ANY WAY, NOR MAY THE INFORMATION OR DESIGN DEPICTED BE DISCLOSED WITHOUT THE PRIOR WRITTEN CONSENT OF THE OWNER. ALL RIGHTS RESERVED.

BRUSH
BRUSH SEM s.r.o.

Title: TIMBER CASE

No. FP217762 Iss B

Sheets/Sheet

PACKING CASE DRAWING SUPPLIED BY SEM

ISS	ZONE	MODIFICATION DETAILS	MOD BY	DATE

THIS DRAWING IS THE PROPERTY OF BRUSH ELECTRICAL MACHINES LTD. Ⓒ IT IS SUPPLIED ON LOAN IN CONFIDENCE AND MUST BE RETURNED IMMEDIATELY ON REQUEST. NO PART OF THE DRAWING MAY BE COPIED OR REPRODUCED IN ANY WAY, NOR MAY THE INFORMATION OR DESIGN DEPICTED BE DISCLOSED WITHOUT THE PRIOR WRITTEN CONSENT OF THE OWNER. ALL RIGHTS RESERVED.

BRUSH
FALCON WORKS, NOTTINGHAM ROAD, LOUGHBOROUGH, LEICS. LE11 1EX
WWW.BRUSH.EU

WELDING	WCP004
MANUFACTURING TOL	B.S.D.942 Ld5
SURFACE TEXTURE	B.S.D.986 Ls2
FIRST ANGLE PROJECTION	

FIRST PROJ	20077	SCALE	1:1.5	ISS A	DATE	15 Apr 2011	CH'D	CDB	ISS A	CH'D CDB
DRG REF					DR'N	CDB	APP	NSG		APP NSG

SHIPPING DETAILS

C 320957000 ISS A

FRAME CODE: BDAX 62-170ER | SHT 1 OF 3 | DRAWING RANGE

ME CAD REV 13

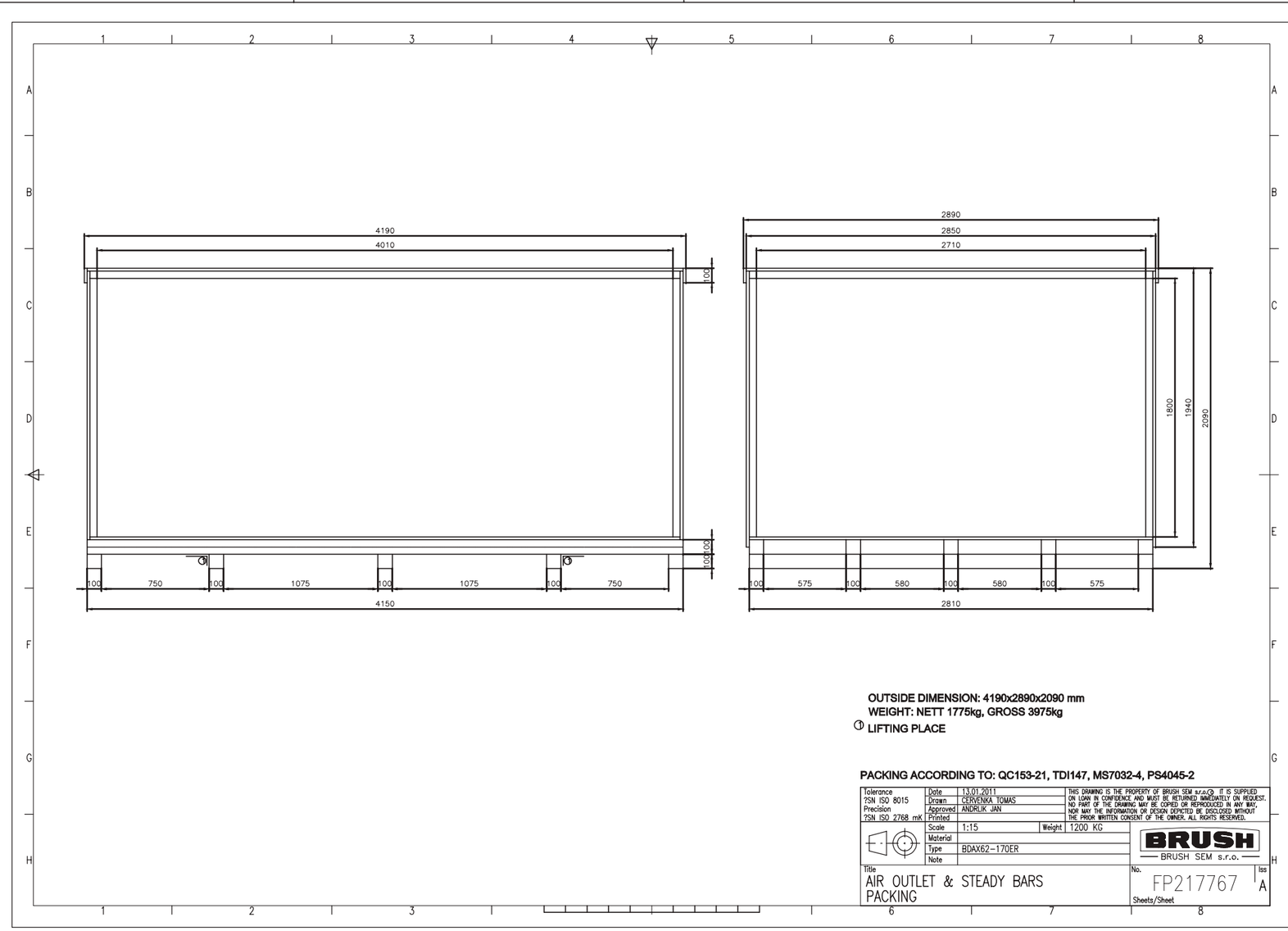

OUTSIDE DIMENSION: 4190x2890x2090 mm
WEIGHT: NETT 1775kg, GROSS 3975kg
① **LIFTING PLACE**

PACKING ACCORDING TO: QC153-21, TDI147, MS7032-4, PS4045-2

Tolerance ?SN ISO 8015 Precision ?SN ISO 2768 mK	Date	13.01.2011	THIS DRAWING IS THE PROPERTY OF BRUSH SEM s.r.o. IT IS SUPPLIED ON LOAN IN CONFIDENCE AND MUST BE RETURNED IMMEDIATELY ON REQUEST. NO PART OF THE DRAWING MAY BE COPIED OR REPRODUCED IN ANY WAY, NOR MAY THE INFORMATION OR DESIGN DEPICTED BE DISCLOSED WITHOUT THE PRIOR WRITTEN CONSENT OF THE OWNER. ALL RIGHTS RESERVED.
	Drawn	ČERVENKA TOMAS	
	Approved	ANDRLIK JAN	
	Printed		
	Scale	1:15	Weight 1200 KG
	Material		
	Type	BDAX62-170ER	
	Note		
Title: AIR OUTLET & STEADY BARS PACKING		No. FP217767	Iss A
		Sheets/Sheet	

BRUSH — BRUSH SEM s.r.o.

PACKING CASE DRAWING SUPPLIED BY SEM

ISS	ZONE	MODIFICATION DETAILS	MOD BY	DATE

THIS DRAWING IS THE PROPERTY OF BRUSH ELECTRICAL MACHINES LTD. © IT IS SUPPLIED ON LOAN IN CONFIDENCE AND MUST BE RETURNED IMMEDIATELY ON REQUEST. NO PART OF THE DRAWING MAY BE COPIED OR REPRODUCED IN ANY WAY, NOR MAY THE INFORMATION OR DESIGN DEPICTED BE DISCLOSED WITHOUT THE PRIOR WRITTEN CONSENT OF THE OWNER. ALL RIGHTS RESERVED.

BRUSH
FALCON WORKS, NOTTINGHAM ROAD, LOUGHBOROUGH, LEICS. LE11 1EX
WWW.BRUSH.EU

WELDING	WCP004
MANUFACTURING TOL	B.S.D.942 Ld5
SURFACE TEXTURE	B.S.D.986 Ls2
FIRST ANGLE PROJECTION	

FIRST PROJ	20077	SCALE	1:1.5	ISS A	DATE	15 Apr 2011	CH'D	CDB	ISS A	CH'D	CDB
DRG REF					DR'N	CDB	APP	NSG		APP	NSG

SHIPPING DETAILS

C 320957000 ISS A

FRAME CODE: BDAX 62-170ER | SHT 2 OF 3 | DRAWING RANGE

ME CAD REV 13

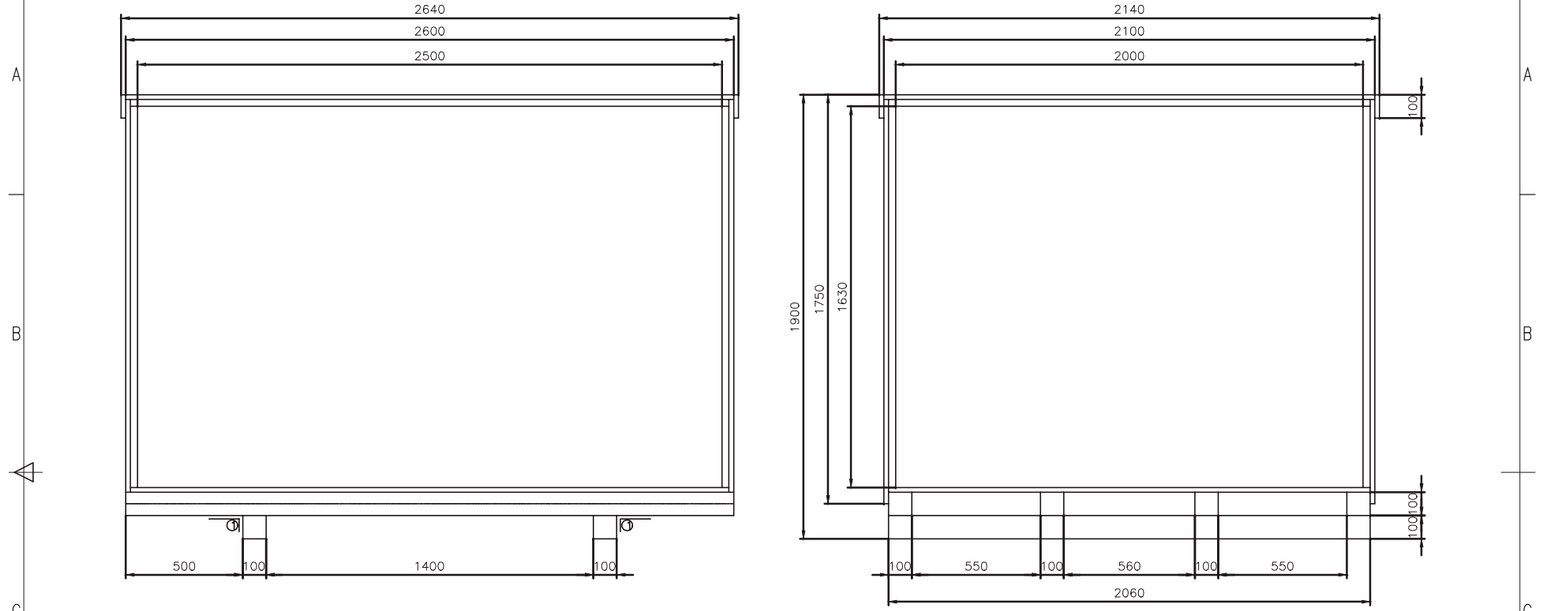

OUTSIDE DIMENSION: 2640x2140x1900 mm
WEIGHT: NETT 635kg, GROSS 1295kg
① **LIFTING PLACE**

PACKING ACCORDING TO: QC153-21, TDI147, MS7032-4, PS4045-2

Tolerance ?SN ISO 8015 Precision ?SN ISO 2768 mK	Date	13.01.2011	THIS DRAWING IS THE PROPERTY OF BRUSH SEM s.r.o.© IT IS SUPPLIED ON LOAN IN CONFIDENCE AND MUST BE RETURNED IMMEDIATELY ON REQUEST. NO PART OF THE DRAWING MAY BE COPIED OR REPRODUCED IN ANY WAY, NOR MAY THE INFORMATION OR DESIGN DEPICTED BE DISCLOSED WITHOUT THE PRIOR WRITTEN CONSENT OF THE OWNER. ALL RIGHTS RESERVED.	
	Drawn	?ERVENKA TOM??		
	Approved	ANDRL?K JAN		
	Printed			
	Scale	1:16	Weight	660 KG
	Material	D?EVO		
	Type	BDAX62-170ER		
	Note			
Title: AIR INLET (N.E.E./E.E.) PACKING			No. FP334601	Iss A
			Sheets/Sheet	

BRUSH
BRUSH SEM s.r.o.

PACKING CASE DRAWING SUPPLIED BY SEM

ISS	ZONE	MODIFICATION DETAILS	MOD BY	DATE

THIS DRAWING IS THE PROPERTY OF BRUSH ELECTRICAL MACHINES LTD. © IT IS SUPPLIED ON LOAN IN CONFIDENCE AND MUST BE RETURNED IMMEDIATELY ON REQUEST. NO PART OF THE DRAWING MAY BE COPIED OR REPRODUCED IN ANY WAY, NOR MAY THE INFORMATION OR DESIGN DEPICTED BE DISCLOSED WITHOUT THE PRIOR WRITTEN CONSENT OF THE OWNER. ALL RIGHTS RESERVED.

BRUSH
FALCON WORKS, NOTTINGHAM ROAD, LOUGHBOROUGH, LEICS. LE11 1EX
WWW.BRUSH.EU

WELDING	WCP004
MANUFACTURING TOL	B.S.D.942 Ld5
SURFACE TEXTURE	B.S.D.986 Ls2
FIRST ANGLE PROJECTION	

FIRST PROJ	20077	SCALE	1:1.5	ISS A	DATE	15 Apr 2011	CH'D	CDB	ISS A	CH'D	CDB
DRG REF					DR'N	CDB	APP	NSG		APP	NSG

SHIPPING DETAILS

C 320957000 ISS A

FRAME CODE: BDAX 62-170ER | SHT 3 OF 3 | DRAWING RANGE

ME CAD REV 13

FACES OF COLLARS (REFS 07 & 16) TO BE FLUSH WITH FACES OF SUPPORT RING & CARRIER RINGS

THREADS ON RECTIFIERS TO BE TREATED TO PS 2867 Ⓓ
OTHER CONTACT JOINTS TO BE SMEARED WITH UNIAL CONTACT GREASE (REF 35) ON ASSEMBLY
RECTIFIERS TO BE ASSEMBLED USING A MOUNTING TORQUE OF 21.5 Nm (15.8 Ft Lbs) MIN - 28.2 Nm (21 Ft Lbs) MAX.

Ⓒ
LOCKING PLATES (REF 22,24,30) TO BE LOCKED BY TURNING-UP CORNER OF LOCKING PLATE AGAINST FLAT OF SCREW HEAD.
ON NEGATIVE SIDE LOCK ALL LOCKING PLATES IN POSITION.
ON POSITIVE SIDE LOCK ONLY DIODE LOCKING PLATES (REF 30) IN POSITION.
FUSE LOCKING PLATES (REF 22,24) NOT TO BE LOCKED IN POSITION UNTIL AFTER COMPLETION OF EXCITER ASSEMBLY WITH GENERATOR PRIOR TO TESTING.

IT IS IMPORTANT THAT THE STEEL BUSHES (REFS 18 & 26) PROTRUDE 0.05mm TO 0.15mm OUTSIDE THE FUSE SUPPORT BLOCKS (REF 12 & 13).

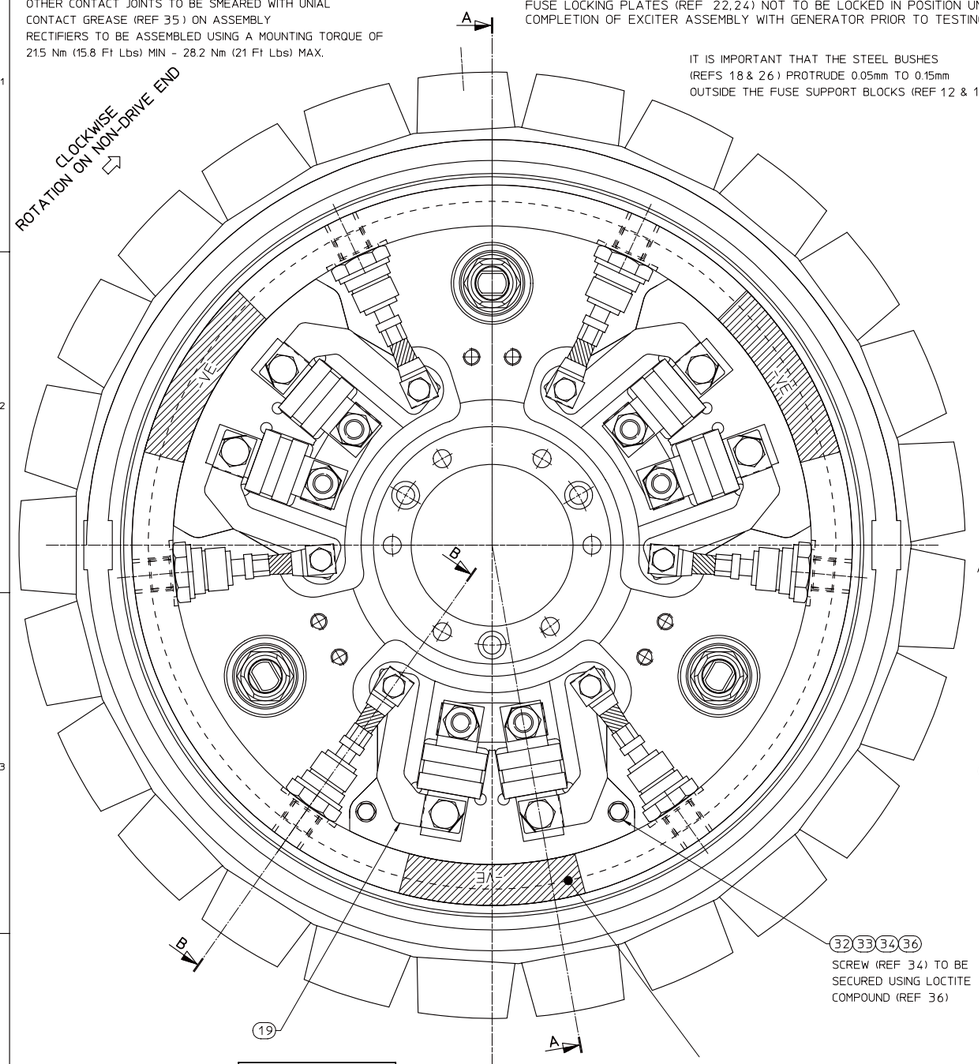

VIEW LOOKING ON NON-DRIVE END

NEGATIVE CARRIER TO BE MARKED WITH BLACK PAINT AND STAMPED 'NEGATIVE'

POSITIVE CARRIER TO BE MARKED WITH RED PAINT AND STAMPED 'POSITIVE'

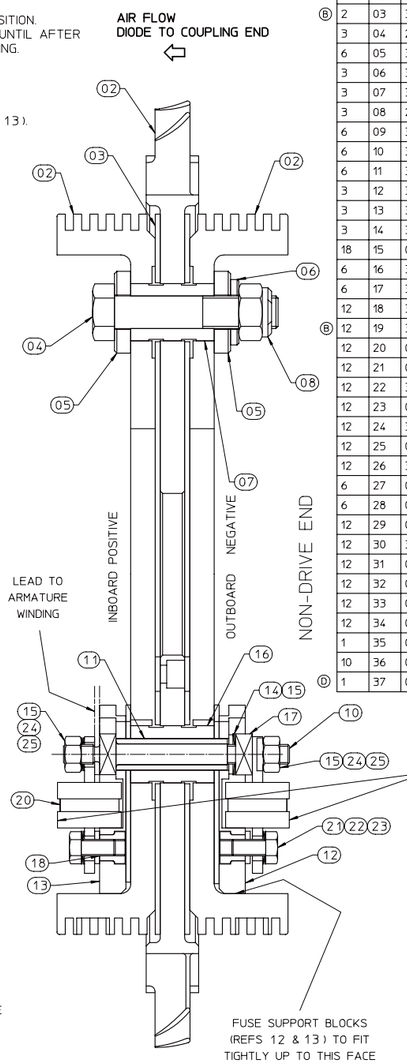

SECTION A-A

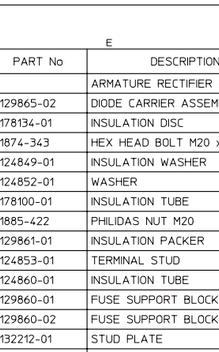

NOTE POSITIONS OF FUSE SUPPORT BLOCKS RELATIVE TO THE HOLES AROUND THE INSIDE DIAMETER OF SUPPORT RING



SECTION B-B

QTY	REF	PART No	DESCRIPTION	MATL	SPEC	CODE No	MATL SIZE	MASS
	01		ARMATURE RECTIFIER ASSY					
1	02	3129865-02	DIODE CARRIER ASSEMBLY					
2	03	3178134-01	INSULATION DISC					
3	04	21874-343	HEX HEAD BOLT M20 x 100	ST				
6	05	3124849-01	INSULATION WASHER					
3	06	3124852-01	WASHER					
3	07	3178100-01	INSULATION TUBE					
3	08	21885-422	PHILIDAS NUT M20	ST				
6	09	3129861-01	INSULATION PACKER					
6	10	3124853-01	TERMINAL STUD					
6	11	3124860-01	INSULATION TUBE					
3	12	3129860-01	FUSE SUPPORT BLOCK					
3	13	3129860-02	FUSE SUPPORT BLOCK					
3	14	3132212-01	STUD PLATE					
18	15	021189157	DISC SPRING M12					
6	16	3178100-02	INSULATION TUBE					
6	17	3124856-01	LOCKNUT					
12	18	3124861-01	BUSH					
12	19	3124863-01	DIODE FUSE LINK					
12	20	025711428	FUSE 450 SBMT					
12	21	021189147	DISC SPRING M10					
12	22	3124024-08	LOCKING PLATE					
12	23	021862209	HEX HEAD SCREW M10 X 20	ST				
12	24	3124024-09	LOCKING PLATE					
12	25	021881268	HEX NUT M12	ST				
12	26	3124857-01	TERMINAL BUSH					
6	27	028239088	DIODE - R6W12033 VO					
6	28	028239089	DIODE - R6W02033 VO					
12	29	021189132	DISC SPRING M8					
12	30	312402403	LOCKING PLATE					
12	31	021862168	HEX HEAD SCREW M8 X 16	ST				
12	32	021181044	PLAIN WASHER M6	ST				
12	33	021189118	DISC SPRING M6					
12	34	021862131	HEX HEAD SCREW M6 X 30	ST				
1	35	017321508	UNIAL COMPOUND					
10	36	018713194	LOCTITE COMPOUND 243					
1	37	018711150	BX QTT COMPOUND					

Ⓓ

PROCESS GUIDE
DRG REF 3145348
AS DRG. REF. EXCEPT -

SIMILIAR TO ABOVE EXCEPT WITH A DIFFERENT INSULATION BUSH AND HEX HEAD BOLT INSTEAD OF INSULATED BOLT.

TORQUE FIGURES FOR SCREWS (Nm)	
M8	20 to 25
M10	45 to 50
M12	45 to 50
M20	120

FOR D.O. REFERENCE

DOUBLE DIODE AND FUSE ARRANGEMENT ASSEMBLY USED WITH Ø90 BORE SHAFT INTEGRAL ALUMINIUM SUPPORT RING AND FAN EXCITER FRAME BX10 (BXJ30).

FOR ANTI-CLOCKWISE ROTATION SEE DRG 317810700

1000 AMP

ISS	ZONE	MODIFICATION DETAILS	MOD BY	DATE
F		THE NOTE REGARDING THE STAMPING OF NEGATIVE AND POSITIVE CLARIFIED.	BC5	02 OCT 2007
E		LOCTITE FROM 241 TO 243	BC5	16 NOV 2006

THIS DRAWING IS THE PROPERTY OF BRUSH ELECTRICAL MACHINES LTD. Ⓒ IT IS SUPPLIED ON LOAN IN CONFIDENCE AND MUST BE RETURNED IMMEDIATELY ON REQUEST. NO PART OF THE DRAWING MAY BE COPIED OR REPRODUCED IN ANY WAY, NOR MAY THE INFORMATION OR DESIGN DEPICTED BE DISCLOSED WITHOUT THE PRIOR WRITTEN CONSENT OF THE OWNER. ALL RIGHTS RESERVED.

BRUSH
FALCON WORKS, NOTTINGHAM ROAD, LOUGHBOROUGH, LEICS. LE11 1EX
WWW.BRUSH.EU

WELDING	WCP004	FIRST PROJ	FUTURE	SCALE	1:1.5	ISS	DATE	07 Jun 2001	CH'D	RC	ISS	CH'D	BC5
MANUFACTURING TOL	B.S.D.942 Ld5					A	DR'N	RC	APP	NSG	F	APP	NSG
SURFACE TEXTURE	B.S.D.986 Ls2	DRG REF	314534800										
FIRST ANGLE PROJECTION		RECTIFIER ASSEMBLY				B 317810900							ISS F
		FRAME CODE	BX 10			SHT 1 OF 1		DRAWING RANGE					

ME CAD REV 13

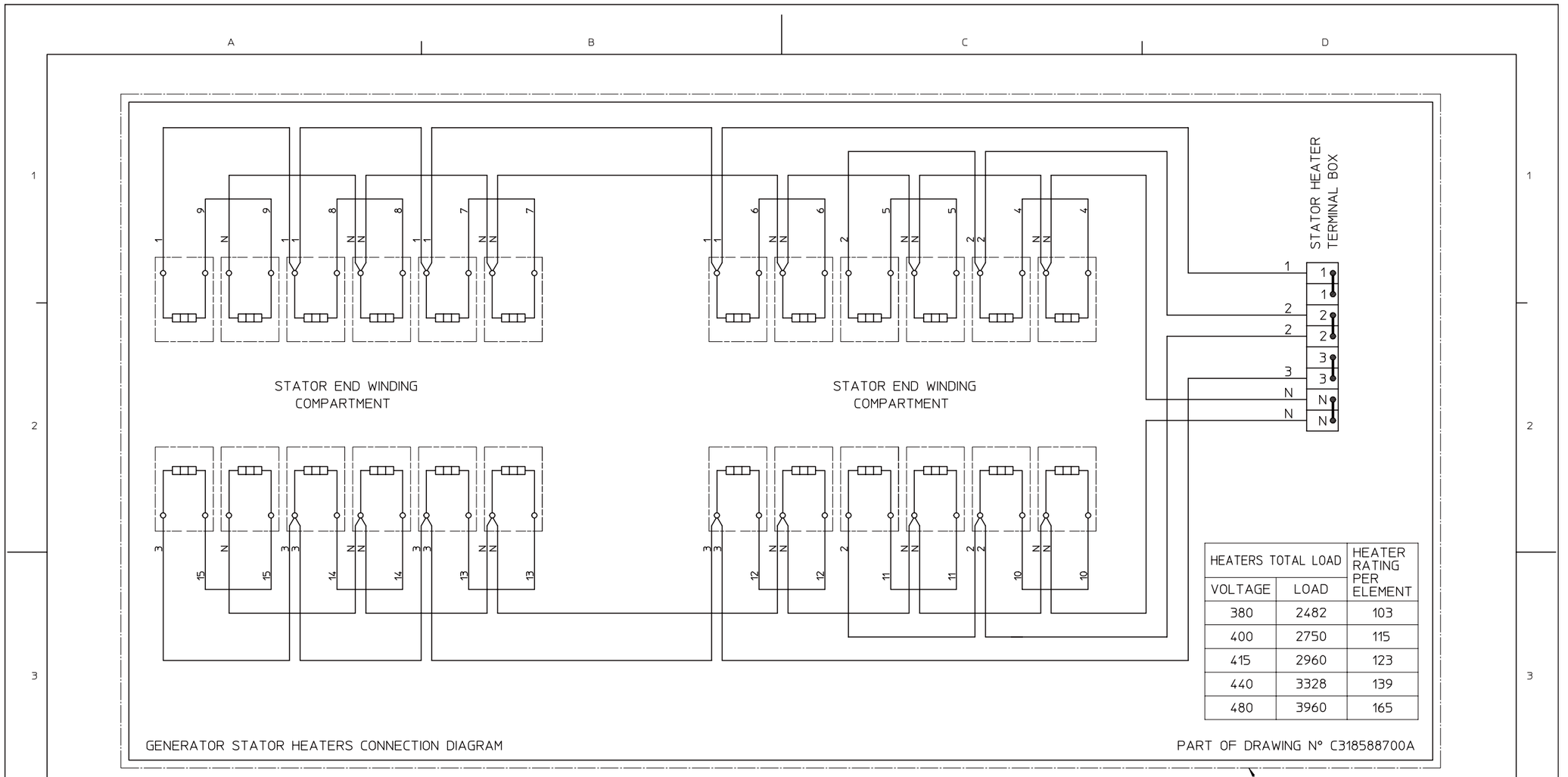

HEATERS TOTAL LOAD		HEATER RATING PER ELEMENT
VOLTAGE	LOAD	
380	2482	103
400	2750	115
415	2960	123
440	3328	139
480	3960	165

NOTES

1. ON PEDESTAL BEARING MACHINES ONLY :-
   AN OZAKLING COPY OF THE CONNECTION DIAGRAM TO BE FIXED
   INSIDE STATOR TERMINAL BOX LID.
   AS INDICATED ON HEATER ARRANGEMENT DRAWING.
2. EACH CABLE TO BE MARKED AT EACH END AS INDICATED ON THIS DIAGRAM.
3. THIS DIAGRAM IS SCHEMATIC ONLY & DOES NOT REPRESENT THE PHYSICAL
   POSITIONS OF WIRING, TERMINAL BOXES, TERMINALS ETC.
4. FOR RATING PLATE INFORMATION SEE CONTRACT AUX TERM BOX CONN DIAGRAM.

LOCATION	HEATER TYPE	HEATER RATING (W)	NOMINAL VOLTAGE (V)	QUANTITY
GENERATOR	BRAY S.E.F. 17	650	275	24

ISS	ZONE	MODIFICATION DETAILS	MOD BY	DATE

THIS DRAWING IS THE PROPERTY OF BRUSH ELECTRICAL MACHINES LTD.© IT IS SUPPLIED ON LOAN IN CONFIDENCE AND MUST BE RETURNED IMMEDIATELY ON REQUEST. NO PART OF THE DRAWING MAY BE COPIED OR REPRODUCED IN ANY WAY, NOR MAY THE INFORMATION OR DESIGN DEPICTED BE DISCLOSED WITHOUT THE PRIOR WRITTEN CONSENT OF THE OWNER. ALL RIGHTS RESERVED.

BRUSH
BRUSH BEM Ltd.
P.O. BOX 18 LOUGHBOROUGH
LEICESTERSHIRE LE11 1HJ

WELDING	B.S.D.927 Lx2
MANUFACTURING TOL	B.S.D.942 Ld5
SURFACE TEXTURE	B.S.D.986 Ls2
FIRST ANGLE PROJECTION	

FIRST PROJ	10969	SCALE	1:1	ISS A	DATE	04 Mar 2005	CH'D	IVB	ISS A	CH'D	IVB
DRG REF	317427105				DR'N	IVB	APP	NSG		APP	NSG

CONNECTION DIAGRAM - HEATERS

C 318588700 ISS A

FRAME CODE BDAX 7-193ER | SHT 1 OF 1 | DRAWING RANGE

ME CAD REV 13

QTY	ITEM	PART No	DESCRIPTION	MATL	SPEC	CODE No	MATL SIZE
1 EA	101	317720101	BRACKET-BRUSH HOLDER				
2 EA	102	317463204	STUD - SPACER				
1 EA	103	840012101	BRUSH HOLDER				
1 EA	104	840012001	BRUSH				
2 EA	105		HEX HEAD SCREW			021862169	M8 X 20 LG.
2 EA	106		SPRING WASHER			021184416	M8
1 MT	107		EARTH CABLE			013448943	10AWG GREEN / YELLOW
2 EA	108		PRE-INSULATED COMPRESSION TERMINAL			025415179	M6 RING TYPE
1 EA	109		HEX HEAD SCREW			021862124	M6 X 8 LG.
1 EA	110		WASHER PLAIN			021181244	M6
6 EA	111		CABLE CLIP			022457604	HELLERMANN INSULOID NX1
6 EA	112		SDRV PAN			021854086	M4 X 12 (B)
(B) 6 EA	113		SHPRF WASH			021186011	M4
(B) 6 EA	114		PLAIN WASHER			021181041	M4

PROCESS GUIDE

DRG. REF. 317720300
AS DRG. REF. EXCEPT -
BRUSHGEAR ASSEMBLY
NOW BELOW HORIZONTAL
CENTRE LINE.

VIEW ON A

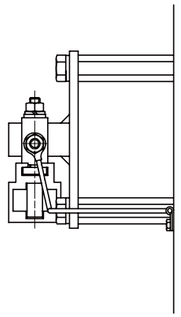

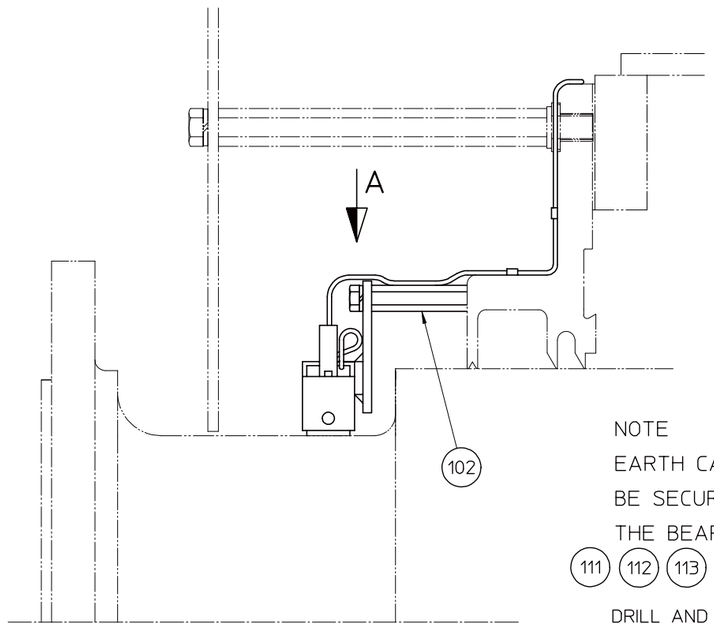

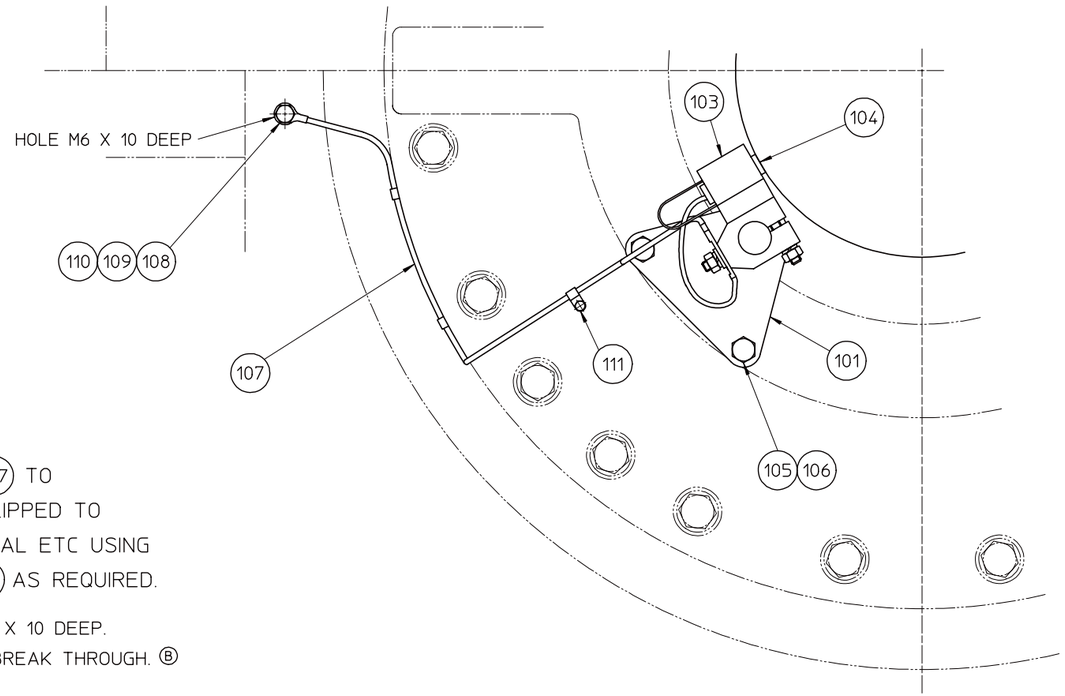

NOTE
EARTH CABLE (107) TO
BE SECURELY CLIPPED TO
THE BEARING SEAL ETC USING
(111) (112) (113) & (114) AS REQUIRED.

DRILL AND TAP M4 X 10 DEEP.
HOLES MUST NOT BREAK THROUGH. (B)

ISS	ZONE	MODIFICATION DETAILS	MOD BY	DATE
B		SCREW ITEM 112 WAS M3 X 10. ITEMS 113 AND 114 ADDED. DRILL AND TAPPING M4 INSTRUCTIONS ADDED.	RB5	16 APR 2007

THIS DRAWING IS THE PROPERTY OF BRUSH ELECTRICAL MACHINES LTD. (C) IT IS SUPPLIED ON LOAN IN CONFIDENCE AND MUST BE RETURNED IMMEDIATELY ON REQUEST. NO PART OF THE DRAWING MAY BE COPIED OR REPRODUCED IN ANY WAY, NOR MAY THE INFORMATION OR DESIGN DEPICTED BE DISCLOSED WITHOUT THE PRIOR WRITTEN CONSENT OF THE OWNER. ALL RIGHTS RESERVED.

BRUSH
FALCON WORKS, NOTTINGHAM ROAD, LOUGHBOROUGH, LEICS. LE11 1EX
WWW.BRUSH.EU

WELDING	WCP004
MANUFACTURING TOL	B.S.D.942 Ld5
SURFACE TEXTURE	B.S.D.986 Ls2
FIRST ANGLE PROJECTION	

FIRST PROJ	12507	SCALE	1:5	ISS A	DATE	29 Jun 2006	CH'D	ASR	ISS B	CH'D	RB5
DRG REF	317720300				DR'N	ASR	APP	NSG		APP	NSG

1 KG	EARTHING BRUSHGEAR ASSEMBLY	318965501
PART WT	PART DESCRIPTION	PART NO

EARTHING BRUSHGEAR ASSEMBLY — C 318965500 — ISS B

FRAME CODE: BDAX 62-170ER — SHT 1 OF 1 — DRAWING RANGE

ME CAD REV 13

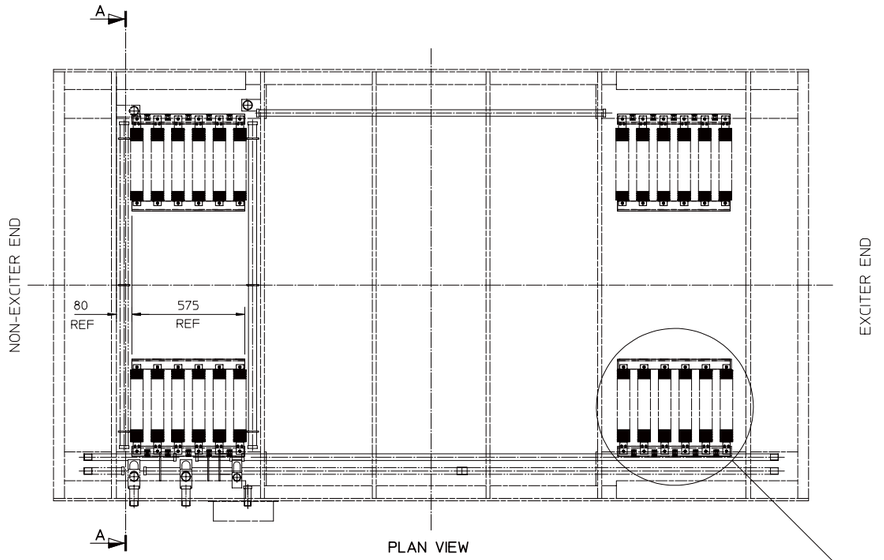

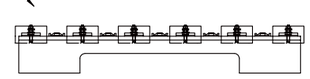

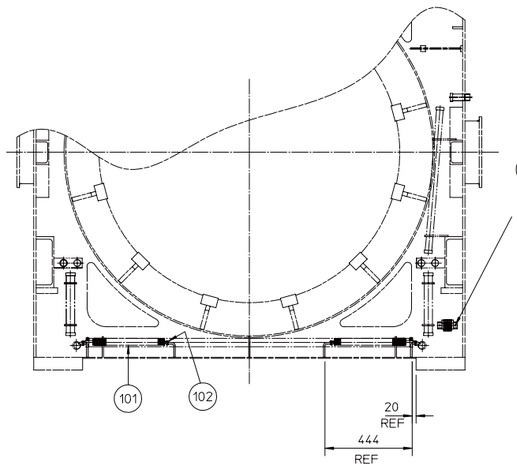

SECTION A - A

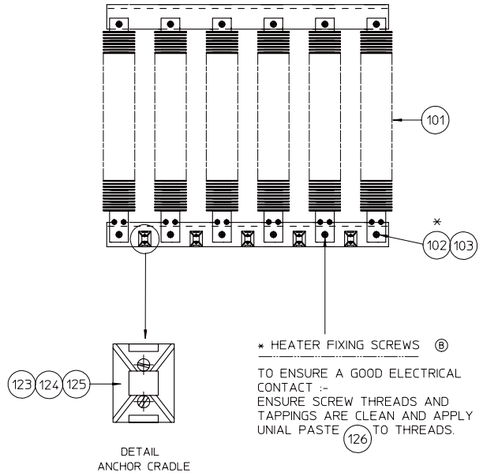

DETAIL
ANCHOR CRADLE

* HEATER FIXING SCREWS (B)

TO ENSURE A GOOD ELECTRICAL CONTACT :-
ENSURE SCREW THREADS AND TAPPINGS ARE CLEAN AND APPLY UNIAL PASTE (126) TO THREADS.

QTY	ITEM	PART No	DESCRIPTION	MATL	SPEC	CODE No	MATL SIZE
1 EA	101		SEF17 FINNED HEATER 275V 650W			025281528	
48 EA	102		M6X16MM HX HD SCRE			021862128	
48 EA	103		M6 SHAKEPROOF WASH			021186074	EXTERNAL TEETH
1 EA	104	318268701	TERMINAL RAIL ASSEMBLY				
2 EA	105		SDRV PAN M5X12			021854106	
2 EA	106		M5 SPRING WASHER			021184413	
40 MT	107		CABLE SINGLE-12AWG BLACK			013448935	
66 EA	108		Y53PR PRE-INSULATED TERMINALS			025415169	
6 EA	109		Y14PP PRE-INSULATED TERMINALS			025415290	
19 EA	110		ETFB MARK 1 CABLE MARKER			025351151	
8 EA	111		ETFB MARK 2 CABLE MARKER			025351152	
7 EA	112		ETFB MARK 3 CABLE MARKER			025351153	
4 EA	113		ETFB MARK 4 CABLE MARKERS			025351154	
4 EA	114		ETFB MARK 5 CABLE MARKERS			025351155	
2 EA	115		ETFB MARK 6 CABLE MARKERS			025351156	
2 EA	116		ETFB MARK 7 CABLE MARKERS			025351157	
2 EA	117		ETFB MARK 8 CABLE MARKERS			025351158	
2 EA	118		ETFB MARK 9 CABLE MARKERS			025351159	
2 EA	119		ETFB MARK 0 CABLE MARKERS			025351160	
14 EA	120		ETFB MARK N CABLE MARKERS			025351174	
4 EA	121	122355028	WARNING PLATE HEATER				
16 EA	122		NO.2X1/4SSHD SCRE			021276324	
20 EA	123		CABLE CRADLE			022458363	
20 EA	124		CABLE TIE NYLON			022458402	
40 EA	125		M4X6.5 SELF TAPPER			021262813	
0.01 TN	126		UNIAL PASTE			017321508	

GENERAL NOTES

HEATER ASSEMBLIES TO BE CONNECTED AS SHOWN ON HEATER CONNECTION DIAGRAM 318588700. CRIMPS TO BE IN ACCORDANCE WITH PS2717.

ALL CABLES TO BE MARKED AT BOTH ENDS WITH IDENTIFICATION SLEEVES REFS (110) TO (120) AS SHOWN ON CONNECTION DIAGRAM.

AN OZAKLING COPY OF THE HEATER CONNECTION DIAGRAM TO BE FIXED ON THE INSIDE OF THE ACCESS COVER ADJACENT TO TERMINAL RAIL ASSEMBLY

WARNING PLATES (121) TO BE FIXED ON OUTSIDE OF HEATER ACCESS COVER PLATES WITH DRIVE SCREWS (122)

PROCESS NOTE

AS 317687600 EXCEPT :
HEATER EARTHS REMOVED
(TERM BLOCK TO SUIT).

D.O. NOTE :

DAX FRAME 6 E - 2200 WIDE STATOR.

ISS	ZONE	MODIFICATION DETAILS	MOD BY	DATE
B		ITEM 103 - PART NUMBER WAS 021184414. ITEM 126 ADDED. NOTE RE - USE OF 126 ADDED	RK	28 FEB 2008

THIS DRAWING IS THE PROPERTY OF BRUSH ELECTRICAL MACHINES LTD. IT IS SUPPLIED ON LOAN IN CONFIDENCE AND MUST BE RETURNED IMMEDIATELY ON REQUEST. NO PART OF THE DRAWING MAY BE COPIED OR REPRODUCED IN ANY WAY, NOR MAY THE INFORMATION OR DESIGN DEPICTED BE DISCLOSED WITHOUT THE PRIOR WRITTEN CONSENT OF THE OWNER. ALL RIGHTS RESERVED.

BRUSH
FALCON WORKS, NOTTINGHAM ROAD, LOUGHBOROUGH, LEICS. LE11 1EX
WWW.BRUSH.EU

WELDING	WCP004
MANUFACTURING TOL	B.S.D.942 Ld5
SURFACE TEXTURE	B.S.D.986 Ls2
	FIRST ANGLE PROJECTION

FIRST PROJ	13626	SCALE	1:12.5	ISS	DATE	08 Mar 2007	CH'D	RK	ISS	CH'D	RK
DRG REF	317687600			A	DR'N	RK	APP	NSG	B	APP	NSG

27 KG	HEATER ARRANGEMENT - STATOR		319241401
PART WT	PART DESCRIPTION		PART NO

HEATER ARRANGEMENT - STATOR — B 319241400 ISS B

FRAME CODE: BDAX 62-170 ER — SHT 1 OF 1 — DRAWING RANGE

ME CAD REV 13

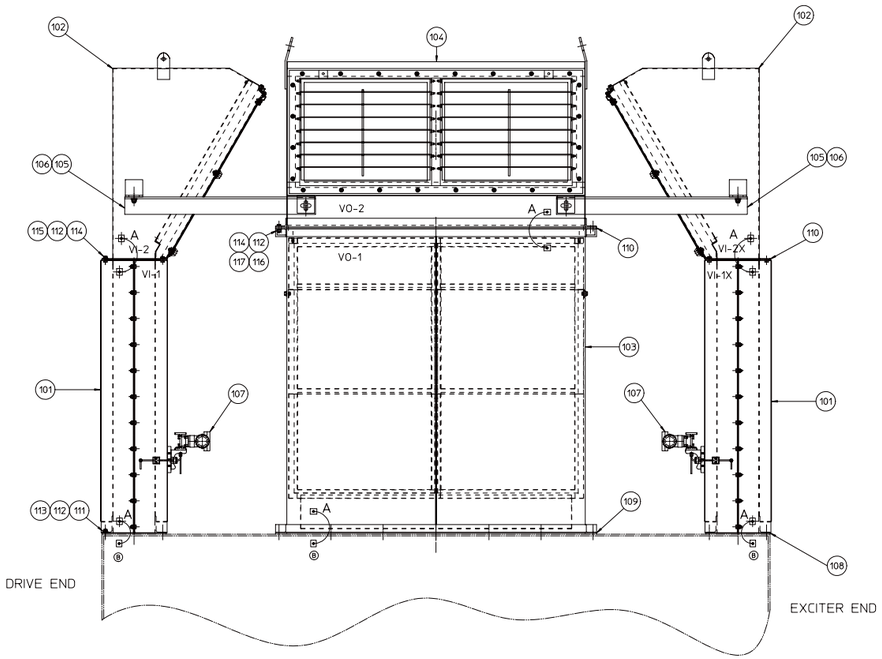

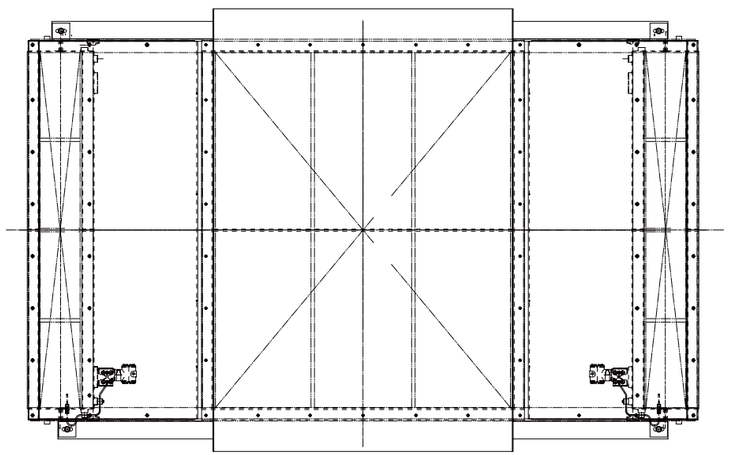

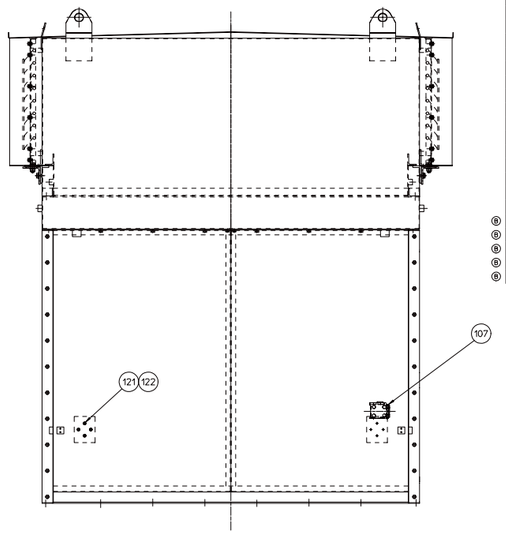

	QTY	ITEM	PART No	DESCRIPTION	MATL	SPEC	CODE No	MATL SIZE
	2 EA	101	320568301	AIR INLET SILENCER FABRICATION				
	2 EA	102	320597301	AIR INLET FILTER HOUSING ASSY				
	1 EA	103	320595301	AIR OUTLET SILENCER ASSEMBLY				
	1 EA	104	320596601	AIR OUTLET LOUVRE ASSEMBLY				
	2 EA	105	320518401	TIE BAR				
	2 EA	106	320518501	TIE BAR				
	2 EA	107	320584801	PRESSURE TRANSMITTER ASSEMBLY				
	2 EA	108	320570401	AIR INLET SILENCER GASKET				
	1 EA	109	320571001	AIR OUTLET SILENCER GASKET				
	25 MT	110		FOAM STRIP			018757065	65 X 9.5 THK
	58 EA	111	318401101	WASHER - SPECIAL	ST.STL			5THK X 35 X 50 - 13 DIA
	116 EA	112		SPRING WASHER			021184418	M12
	58 EA	113		HEX HEAD SCREW			021862252	M12 X 35 LG
	58 EA	114		LARGE DIA PLAIN WASHER			021181448	M12
	32 EA	115		HEX HEAD SCREW			021862251	M12 X 30 LG
	26 EA	116		HEX HEAD SCREW			021862253	M12 X 40 LG
	26 EA	117		HEX NUT			021881268	M12
	16 EA	118		LARGE DIA PLAIN WASHER			021181450	M16
	8 EA	119		HEX HEAD SCREW			021862294	M16 X 45 LG
	8 EA	120		PHILIDAS HEX NUT			021885420	M16
	4 EA	121		SEAL WASHER			024111407	M8
	4 EA	122		HEX HEAD SCREW			021862168	M8 X 16 LG
Ⓑ	12 EA	123		RING TERMINALS			025411126	M12
Ⓑ	2 MT	124		EARTH CABLE			013474389	
Ⓑ	12 EA	125		M12 REC SEC WASHER			021184418	
Ⓑ	12 EA	126		HEX HEAD SCREW			021862250	M12 X 25 LG
Ⓑ	0.12 PK	127	318517001	LABEL - EARTH				

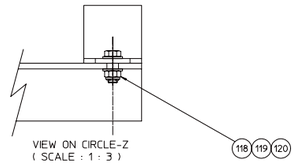

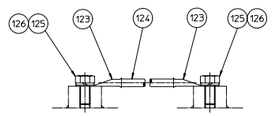

Ⓑ
EARTH BOND ARRANGEMENT (6 POSITIONS)
MARKED A

NOTE! EARTH LABEL REF (127) TO BE POSITIONED
ADJACENT TO EACH EARTH BOSS

NOTES :-

1) ALL MODULE ELEMENTS TO BE STENCILLED AS SHOWN FROM DIRECTION AS SHOWN.
LETTERS TO BE 30mm HIGH AND COLOUR BLACK.

ESTIMATED WEIGHT OF AIR TREATMENT MODULE = 3040 KG.

ISS	ZONE	MODIFICATION DETAILS	MOD BY	DATE
B		EARTH CONNECTIONS ADDED FROM SILENCER FABRICATIONS TO EARTH BLOCKS ON STATOR. EARTH BOND POSITIONS INCREASED FROM 3 TO 6. QTYS OF ITEMS 123 TO 126 DOUBLED. QTY ITEM 127 INCREASED TO 0.12 PK.	CDB	13 APR 2011

THIS DRAWING IS THE PROPERTY OF BRUSH ELECTRICAL MACHINES LTD.(BEM) IS SUPPLIED ON LOAN IN CONFIDENCE AND MUST BE RETURNED IMMEDIATELY ON REQUEST. NO PART OF THE DRAWING MAY BE COPIED OR REPRODUCED IN ANY WAY, NOR MAY THE INFORMATION OR DESIGN DEPICTED BE DISCLOSED WITHOUT THE PRIOR WRITTEN CONSENT OF THE OWNER. ALL RIGHTS RESERVED.

BRUSH
FALCON WORKS, NOTTINGHAM ROAD, LOUGHBOROUGH, LEICS. LE11 1EX. WWW.BRUSH.CO.UK

WELDING	WCP004	FIRST PROJ	18204	SCALE	1:10	ISS	DATE	29 Jul 2010	CHD	CDB	ISS	CHD	CDB		
MANUFACTURING TOL	B.S.D.942 Ld5														
SURFACE TEXTURE	B.S.D.986 Le2	DRG REF	320529400			A	DR'N	CDB	APP	NSG	B	APP	NSG		
FIRST ANGLE PROJECTION		AIR TREATMENT MODULE ASSEMBLY													
FRAME CODE	BDAX 62-170ER														

3040 KG	AIR TREATMENT MODULE ASSEMBLY	320598001
PART WT	PART DESCRIPTION	PART NO

A0 320598000 ISS B

SHT 1 OF 1 | DRAWING RANGE

ME CAD REV 13

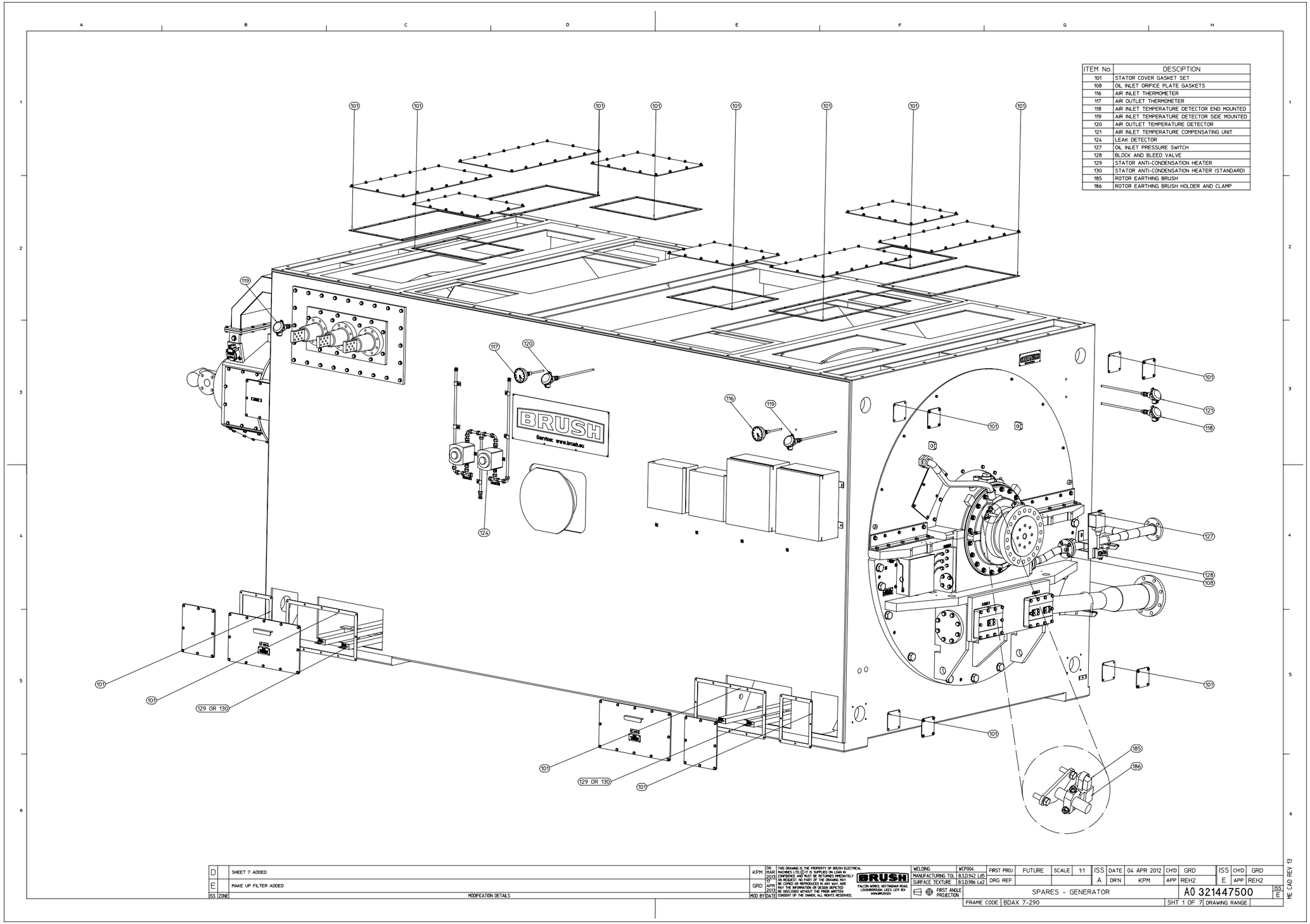

ITEM No.	DESCIPTION
101	STATOR COVER GASKET SET
108	OIL INLET ORIFICE PLATE GASKETS
116	AIR INLET THERMOMETER
117	AIR OUTLET THERMOMETER
118	AIR INLET TEMPERATURE DETECTOR END MOUNTED
119	AIR INLET TEMPERATURE DETECTOR SIDE MOUNTED
120	AIR OUTLET TEMPERATURE DETECTOR
121	AIR INLET TEMPERATURE COMPENSATING UNIT
124	LEAK DETECTOR
127	OIL INLET PRESSURE SWITCH
128	BLOCK AND BLEED VALVE
129	STATOR ANTI-CONDENSATION HEATER
130	STATOR ANTI-CONDENSATION HEATER (STANDARD)
185	ROTOR EARTHING BRUSH
186	ROTOR EARTHING BRUSH HOLDER AND CLAMP

ITEM No.	DESCRIPTION
101	STATOR COVER GASKET SET
108	OIL INLET ORIFICE PLATE GASKET
109	OIL INLET PIPE GASKET
110	OIL OUTLET PIPE GASKET
118	AIR INLET TEMPERATURE DETECTOR END MOUNTED
127	OIL INLET PRESSURE SWITCH
128	BLOCK AND BLEED VALVE
650	TOP GASKET

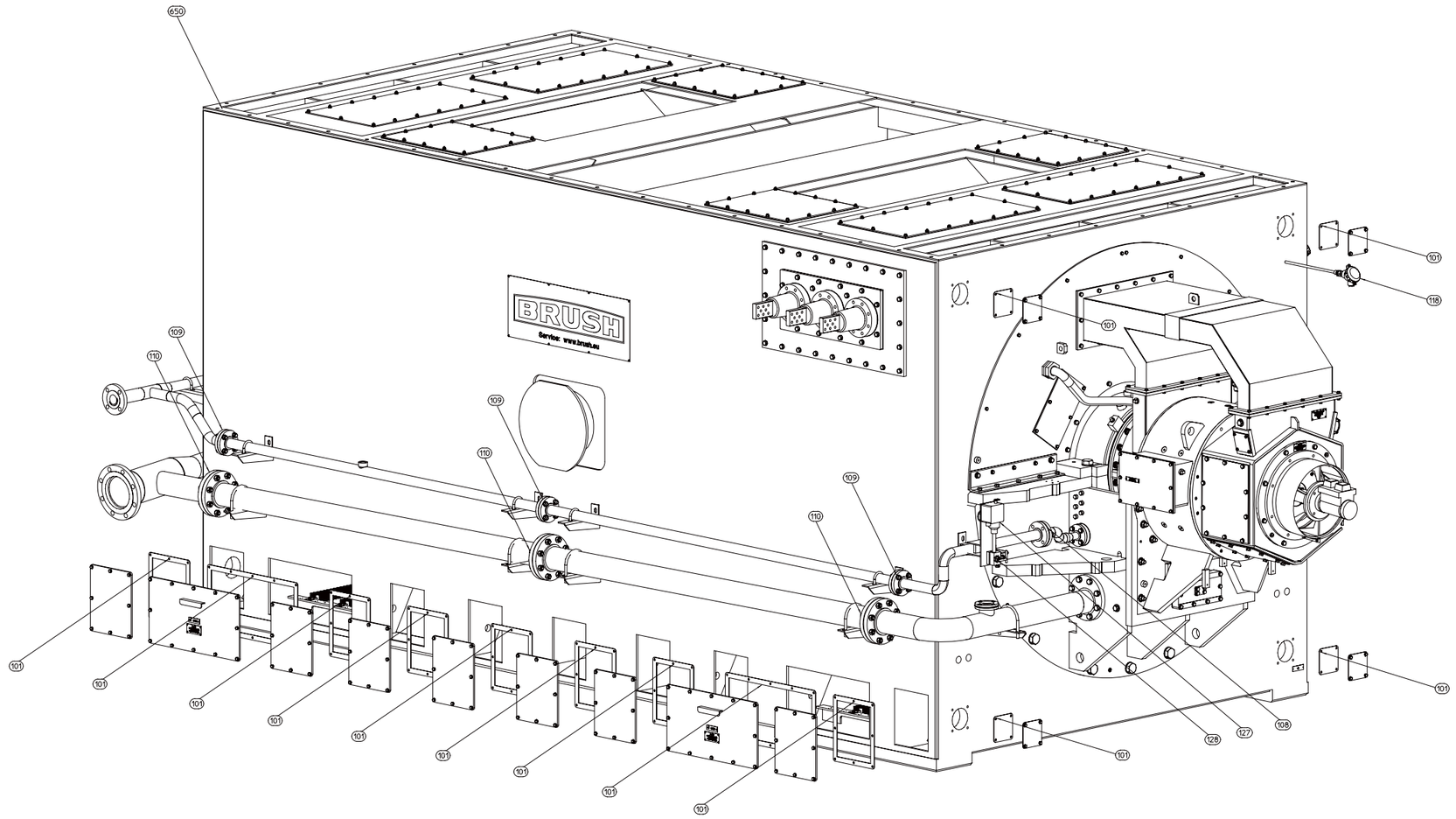

ISS	ZONE	MODIFICATION DETAILS	MOD BY	DATE
D		SHEET 7 ADDED	KPM	06 MAR 2013
E		MAKE UP FILTER ADDED	GRD	17 APR 2013

THIS DRAWING IS THE PROPERTY OF BRUSH ELECTRICAL MACHINES LTD. IT IS SUPPLIED ON LOAN IN CONFIDENCE AND MUST BE RETURNED IMMEDIATELY ON REQUEST. NO PART OF THE DRAWING MAY BE COPIED OR REPRODUCED IN ANY WAY, NOR MAY THE INFORMATION OR DESIGN DEPICTED BE DISCLOSED WITHOUT THE PRIOR WRITTEN CONSENT OF THE OWNER. ALL RIGHTS RESERVED.

BRUSH
FALCON WORKS, NOTTINGHAM ROAD, LOUGHBOROUGH, LEICS, LE11 1EX
WWW.BRUSH.EU

WELDING	WCP004	FIRST PROJ	FUTURE	SCALE	1:1	ISS	DATE	04 APR 2012	CH'D	GRD	ISS	CH'D	GRD
MANUFACTURING TOL	B.S.D.942 Lc5	DRG REF				A	DR'N	KPM	APP	REH2	E	APP	REH2
SURFACE TEXTURE	B.S.D.986 Ls2												

FIRST ANGLE PROJECTION

SPARES - GENERATOR

A0 321447500

ISS E

FRAME CODE BDAX 7-290

SHT 2 OF 7 DRAWING RANGE

ME CAD REV 13

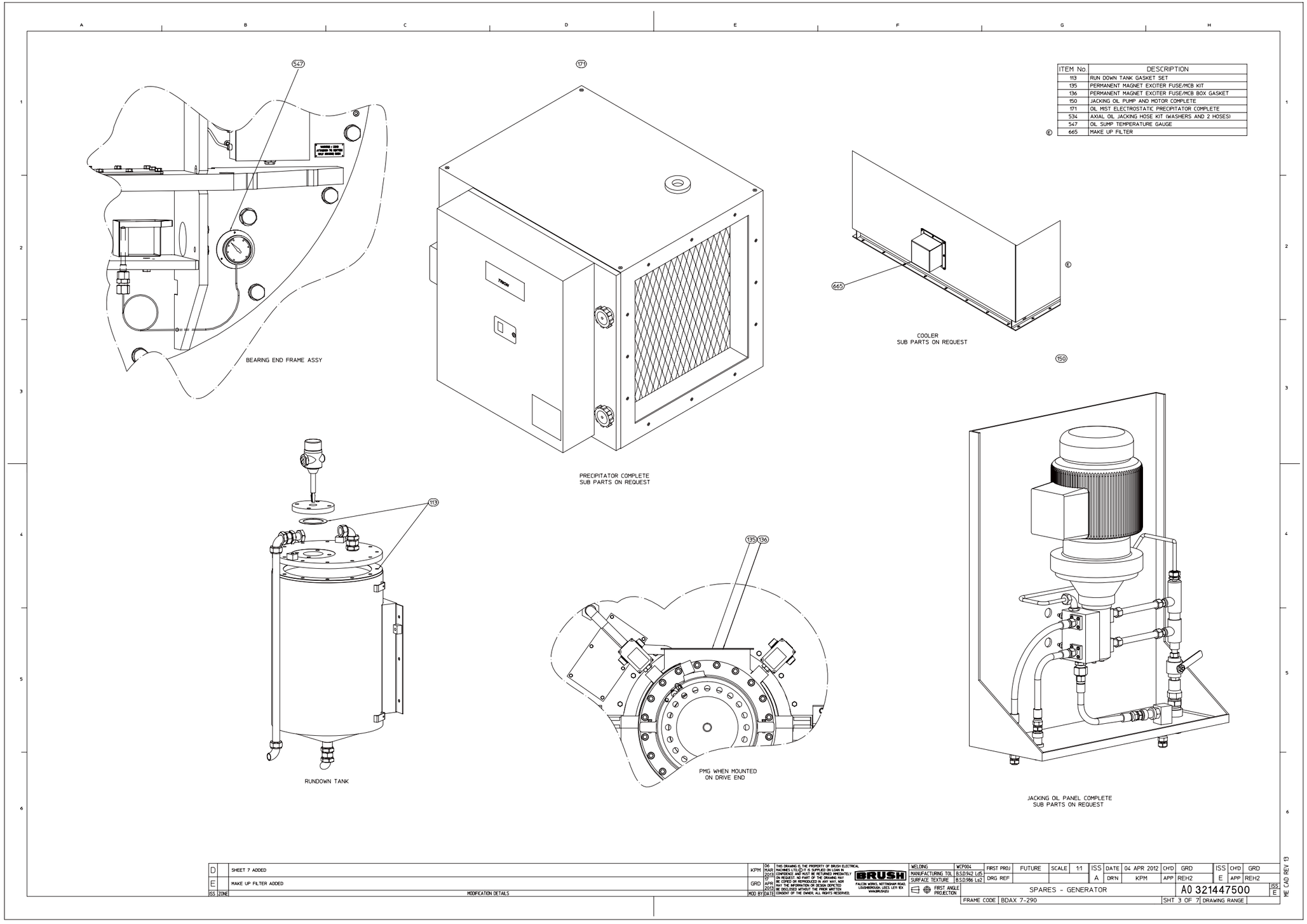
547
BEARING END FRAME ASSY
171
PRECIPITATOR COMPLETE
SUB PARTS ON REQUEST
665
COOLER
SUB PARTS ON REQUEST
150
113
RUNDOWN TANK
135 136
PMG WHEN MOUNTED
ON DRIVE END
JACKING OIL PANEL COMPLETE
SUB PARTS ON REQUEST
D SHEET 7 ADDED
E MAKE UP FILTER ADDED
ISS ZONE MODIFICATION DETAILS
KPM 06 MAR 2013
GRD 07 APR 2013
MOD BY DATE
THIS DRAWING IS THE PROPERTY OF BRUSH ELECTRICAL MACHINES LTD. IT IS SUPPLIED ON LOAN IN CONFIDENCE AND MUST BE RETURNED IMMEDIATELY ON REQUEST. NO PART OF THE DRAWING MAY BE COPIED OR REPRODUCED IN ANY WAY, NOR MAY THE INFORMATION OR DESIGN DEPICTED BE DISCLOSED WITHOUT THE PRIOR WRITTEN CONSENT OF THE OWNER. ALL RIGHTS RESERVED.
BRUSH
FALCON WORKS, NOTTINGHAM ROAD, LOUGHBOROUGH, LEICS. LE11 1EX WWW.BRUSH.EU
WELDING WCP004
MANUFACTURING TOL B.S.D.942 Ld5
SURFACE TEXTURE B.S.D.986 Ls2
FIRST ANGLE PROJECTION
FIRST PROJ FUTURE
DRG REF
SCALE 1:1
ISS A DATE 04 APR 2012 CH'D GRD
DR'N KPM APP REH2
ISS E CH'D GRD
APP REH2
SPARES - GENERATOR
A0 321447500
ISS E
FRAME CODE BDAX 7-290
SHT 3 OF 7 DRAWING RANGE
ME CAD REV 13

ITEM No.	DESCRIPTION
200	EXCITER AIR DUCT GASKET KIT
201	EXCITER SIDE COVER GASKET KIT
202	EXCITER END COVER GASKET
204	EXCITER TERMINAL BOX GASKET KIT
205	PERMANENT MAGNET EXCITER FUSE/MCB BOX GASKET
210	RECTIFIER SPARES KIT (1 PHASE PER KIT)
220	ROTOR EARTH FAULT MONITOR AERIAL
221	ROTOR EARTH FAULT MONITOR RECIEVER
222	ROTOR EARTH FAULT MONITOR TRANSMITTER
230	EXCITER ANTI-CONDENSATION HEATER KIT
231	PERMANENT MAGNET EXCITER FUSE/MCB KIT
235	EXCITER AIR OUTLET TEMPERATURE DETECTOR
240	SHAFT DRIVEN OIL PUMP
241	SHAFT DRIVEN OIL PUMP COUPLING

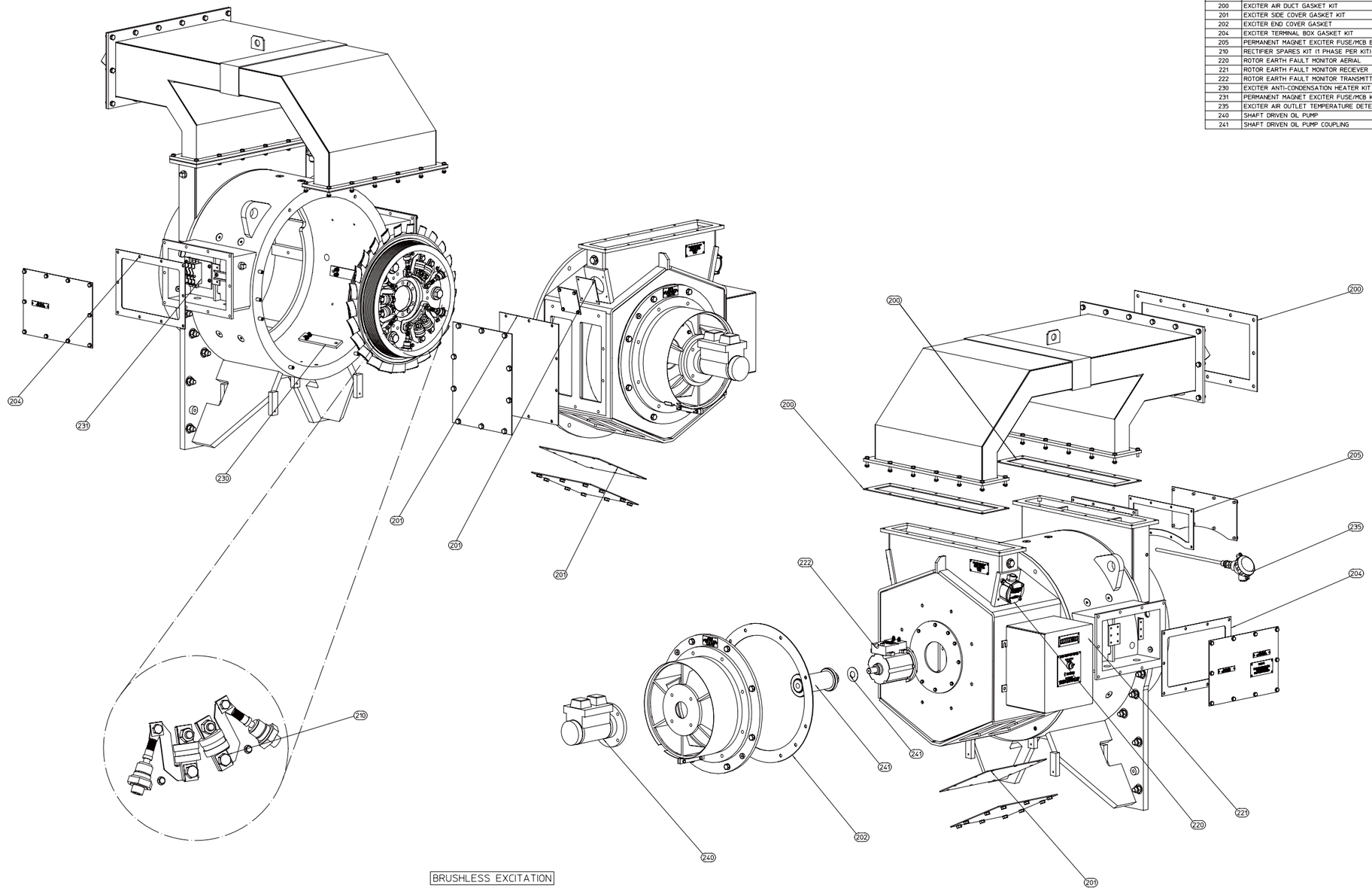

BRUSHLESS EXCITATION

ISS	ZONE	MODIFICATION DETAILS	MOD BY	DATE
D		SHEET 7 ADDED	KPM	06 MAR 2013
E		MAKE UP FILTER ADDED	GRD	07 APR 2013

THIS DRAWING IS THE PROPERTY OF BRUSH ELECTRICAL MACHINES LTD. IT IS SUPPLIED ON LOAN IN CONFIDENCE AND MUST BE RETURNED IMMEDIATELY ON REQUEST. NO PART OF THE DRAWING MAY BE COPIED OR REPRODUCED IN ANY WAY, NOR MAY THE INFORMATION OR DESIGN DEPICTED BE DISCLOSED WITHOUT THE PRIOR WRITTEN CONSENT OF THE OWNER. ALL RIGHTS RESERVED.

BRUSH
FALCON WORKS, NOTTINGHAM ROAD, LOUGHBOROUGH, LEICS. LE11 1EX
WWW.BRUSH.EU

WELDING	WCP004	FIRST PROJ	FUTURE	SCALE	1:1	ISS	DATE	04 APR 2012	CH'D	GRD	ISS	CH'D	GRD
MANUFACTURING TOL	B.S.D.942 Ld5	DRG REF				A	DR'N	KPM	APP	REH2	E	APP	REH2
SURFACE TEXTURE	B.S.D.986 Ls2												

FIRST ANGLE PROJECTION

SPARES - GENERATOR

A0 321447500 ISS E

FRAME CODE BDAX 7-290 SHT 4 OF 7 DRAWING RANGE

ME CAD REV 13

ITEM No.	DESCRIPTION
300	BEARING BUSH COMPLETE
500	PROXIMITY PROBE BLOCK GASKET KIT
501	TOP ENDPLATE GASKET KIT
502	OIL INLET / JACKING PORT GASKET
504	OIL OUTLET PIPE GASKET / BLANK FLANGE
506	SUMP PLUG AND WASHER
507	SUMP COVER PLATES GASKET KIT
512	BEARING SHAFT SEAL GASKET KIT
528	BEARING AIR PIPE KIT
530	JACKING OIL NON-RETURN VALVE
531	BEARING FEED INLET HOSE AND WASHER
532	RADIAL OIL JACKING HOSE KIT (WASHERS AND 2 HOSES) NEE
534	AXIAL OIL JACKING HOSE KIT (WASHERS AND 2 HOSES)
540	TEMPERATURE DETECTOR OIL DRAIN
542	TEMPERATURE DETECTOR BEARING METAL
544	TEMPERATURE DETECTOR KIT - THRUST PAD
550	BEARING SEAL FASTENER KIT
551	BEARING SEAL FASTENER KIT
552	NEE BEARING SHAFT SEAL KIT
570	PROXIMITY PROBE NEE
572	VIBRATION DETECTOR
574	KEY PHASOR

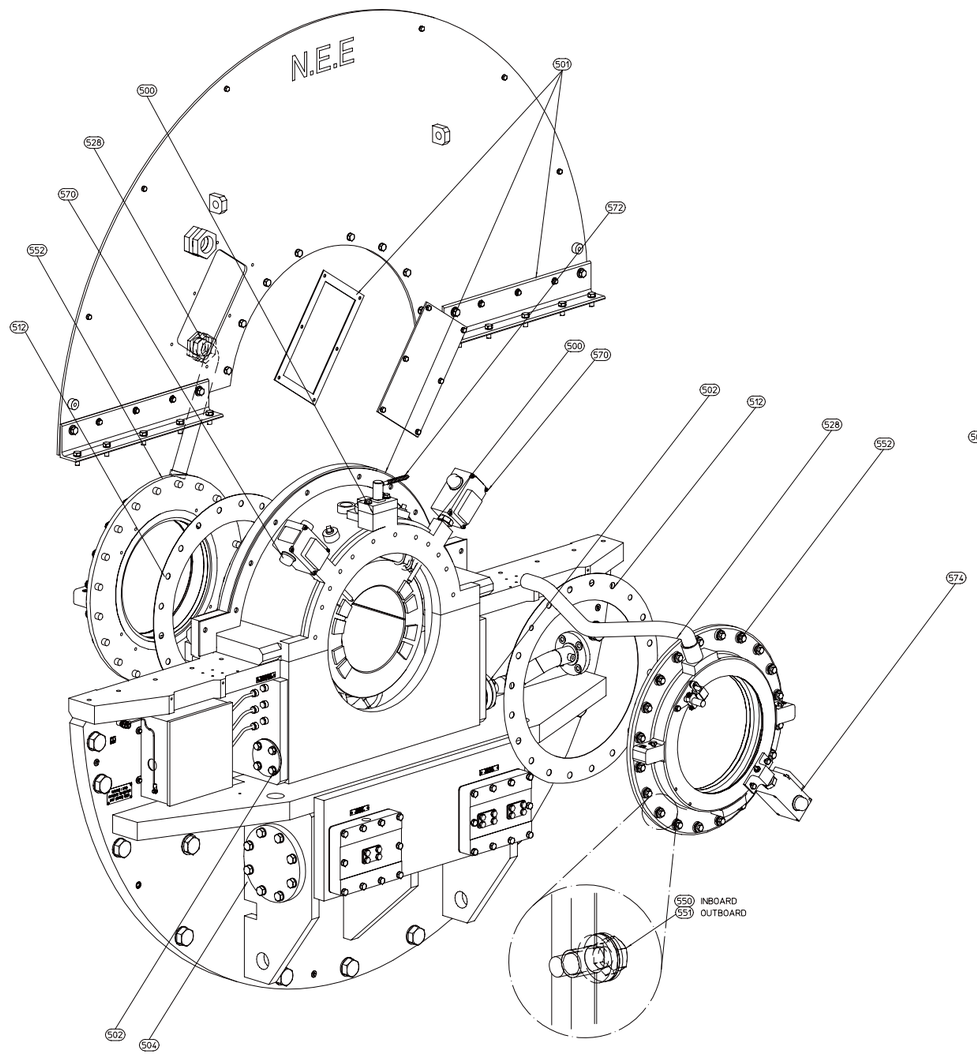

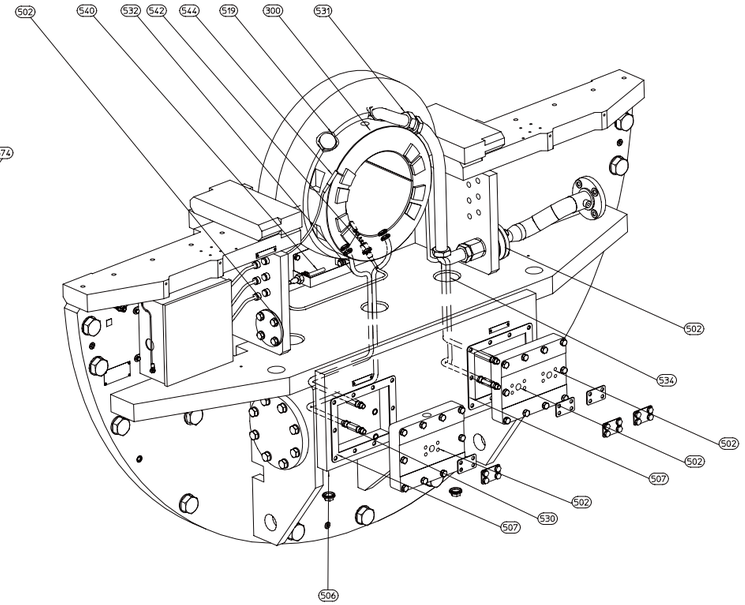

ISS	ZONE	MODIFICATION DETAILS	MOD BY	DATE
D		SHEET 7 ADDED	KPM	06 MAR 2013
E		MAKE UP FILTER ADDED	GRD	17 APR 2013

THIS DRAWING IS THE PROPERTY OF BRUSH ELECTRICAL MACHINES LTD.(BT IT IS SUPPLIED ON LOAN IN CONFIDENCE AND MAY NOT BE USED DIRECTLY OR INDIRECTLY, NO PART OF IT MAY BE REPRODUCED OR COPIED OR REPRODUCED IN ANY WAY, NOR MAY THE INFORMATION OR DESIGN DEPICTED BE DISCLOSED WITHOUT THE PRIOR WRITTEN CONSENT OF THE OWNER. ALL RIGHTS RESERVED.

BRUSH
FALCON WORKS, NOTTINGHAM ROAD, LOUGHBOROUGH, LEICS. LE11 1EX
WWW.BRUSH.EU

WELDING	WCP004	FIRST PROJ	FUTURE	SCALE	1:1	ISS	DATE	04 APR 2012	CHD	GRD	ISS	CHD	GRD		
MANUFACTURING TOL	B.S.D.942 Ld5					A	DRN	KPM	APP	REH2	E	APP	REH2		
SURFACE TEXTURE	B.S.D.986 Ls2	DRG REF												ISS	
FIRST ANGLE PROJECTION		SPARES - GENERATOR								A0 321447500				E	
		FRAME CODE	BDAX 7-290							SHT 5 OF 7	DRAWING RANGE				

ME CAD REV 13

ITEM No.	DESCRIPTION
400	BEARING BUSH COMPLETE
500	PROXIMITY PROBE BLOCK GASKET KIT
501	TOP ENDPLATE GASKET KIT
502	OIL INLET / JACKING PORT GASKET
504	OIL OUTLET PIPE GASKET / BLANK FLANGE
506	SUMP PLUG AND WASHER
507	SUMP COVER PLATES GASKET KIT
512	BEARING SHAFT SEAL GASKET KIT
529	BEARING AIR PIPE KIT
530	JACKING OIL NON-RETURN VALVE
531	BEARING FEED INLET HOSE AND WASHER
533	RADIAL OIL JACKING HOSE KIT (WASHERS AND 2 HOSES) EE
540	TEMPERATURE DETECTOR OIL DRAIN
542	TEMPERATURE DETECTOR BEARING METAL
550	BEARING SEAL FASTENER KIT
551	BEARING SEAL FASTENER KIT
553	BEARINGSHAFT SEAL KIT EE
571	PROXIMITY PROBE EE

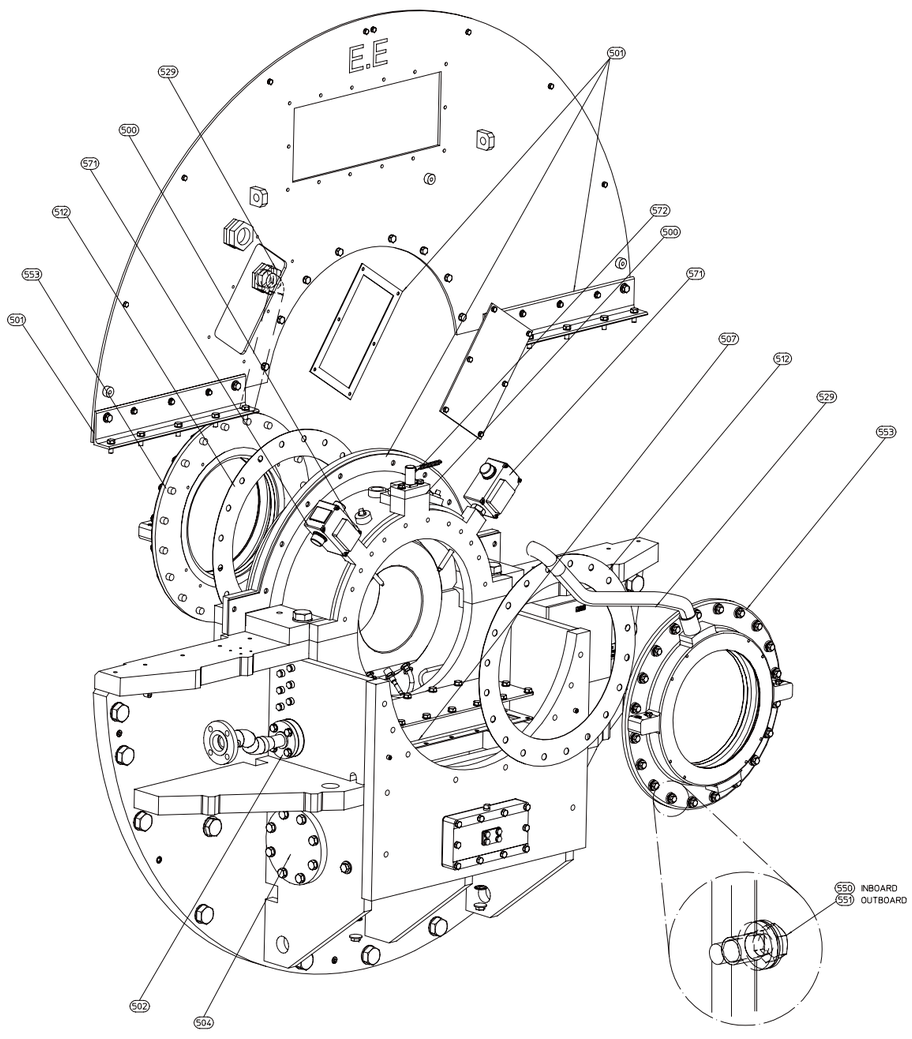

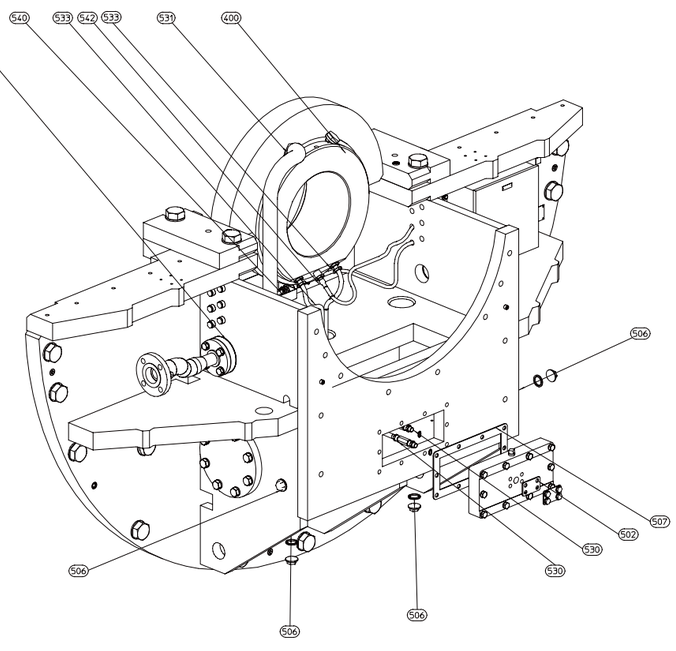

ISS	ZONE	MODIFICATION DETAILS	MOD BY	DATE
D		SHEET 7 ADDED	KPM	06 MAR 2013
E		MAKE UP FILTER ADDED	GRD	17 APR 2013

THIS DRAWING IS THE PROPERTY OF BRUSH ELECTRICAL MACHINES LTD. IT IS SUPPLIED ON LOAN IN CONFIDENCE AND MUST BE RETURNED IMMEDIATELY ON REQUEST. NO PART OF THE DRAWING MAY BE COPIED OR REPRODUCED IN ANY WAY, NOR MAY THE INFORMATION OR DESIGN DEPICTED BE DISCLOSED WITHOUT THE PRIOR WRITTEN CONSENT OF THE OWNER. ALL RIGHTS RESERVED.

BRUSH
FALCON WORKS, NOTTINGHAM ROAD, LOUGHBOROUGH, LEICS LE11 1EX
www.brush.co.uk

WELDING	WCP004	FIRST PROJ	FUTURE	SCALE	1:1	ISS	DATE	04 APR 2012	CH'D	GRD	ISS	CH'D	GRD
MANUFACTURING TOL	B.S.D.942 Lc5	DRG REF				A	DRN	KPM	APP	REH2	E	APP	REH2
SURFACE TEXTURE	B.S.D.986 Ls2												

FIRST ANGLE PROJECTION

SPARES - GENERATOR

A0 321447500 ISS E

FRAME CODE BDAX 7-290 SHT 6 OF 7 DRAWING RANGE

ME CAD REV 13

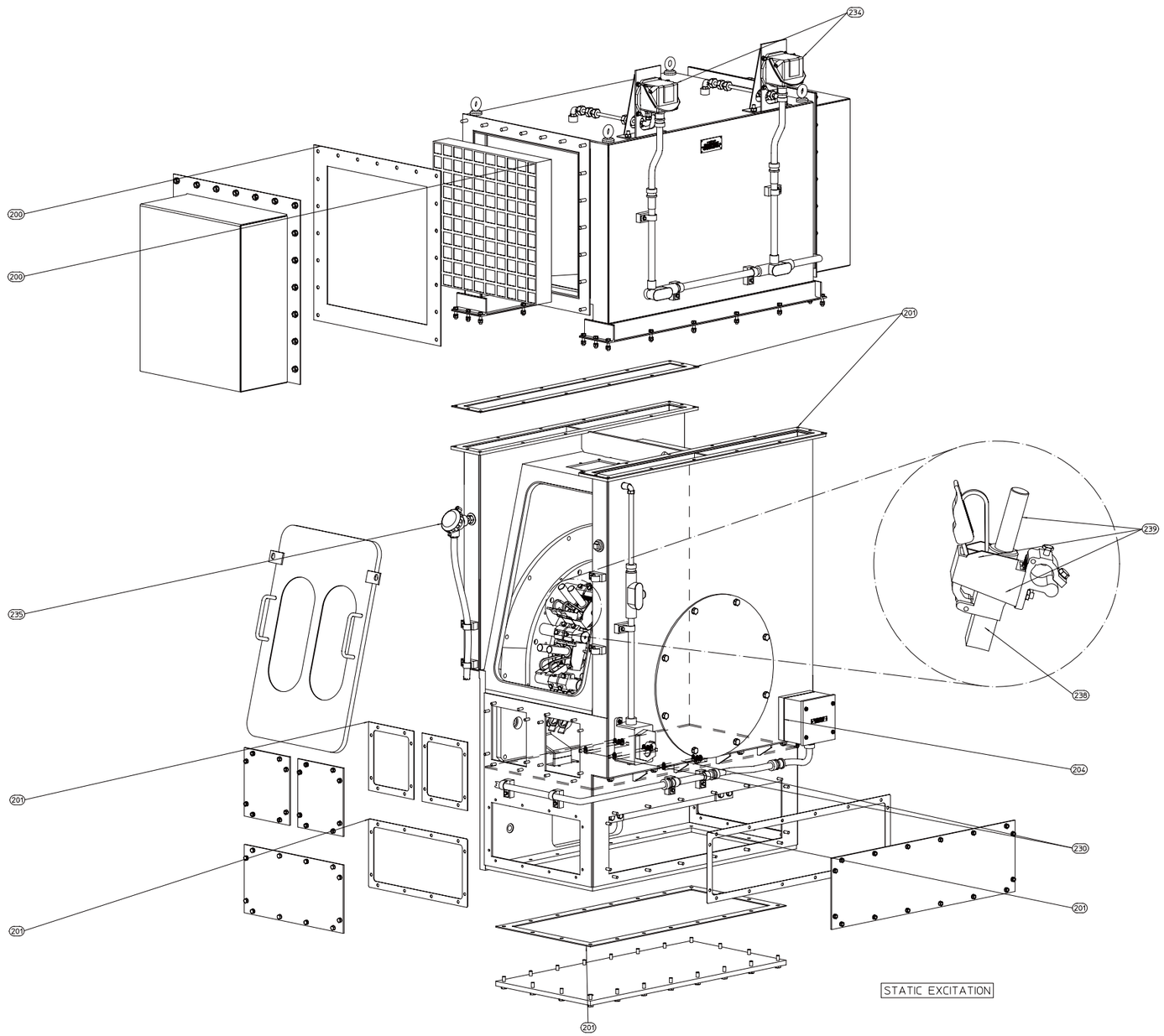

ITEM No.	DESCRIPTION
200	AIR FILTER KIT
201	BRUSH GEAR GASKET KIT
204	TERMINAL BOX GASKET
230	ANTI-CONDENSATION HEATER
234	DIFFERENTIAL PRESSURE SWITCH
235	TEMPERATURE DETECTOR
238	BRUSH
239	BRUSH HOLDER KIT

STATIC EXCITATION

ISS	ZONE	MODIFICATION DETAILS	MOD BY	DATE
D		SHEET 7 ADDED	KPM	06 MAR 2013
E		MAKE UP FILTER ADDED	GRD	17 APR 2013

THIS DRAWING IS THE PROPERTY OF BRUSH ELECTRICAL MACHINES LTD. IT IS SUPPLIED ON LOAN IN CONFIDENCE AND MUST BE RETURNED IMMEDIATELY ON REQUEST. NO PART OF THE DRAWING MAY BE COPIED OR REPRODUCED IN ANY WAY. NOR MAY THE INFORMATION OR DESIGN DEPICTED BE DISCLOSED WITHOUT THE PRIOR WRITTEN CONSENT OF THE OWNER. ALL RIGHTS RESERVED.

BRUSH
FALCON WORKS, NOTTINGHAM ROAD, LOUGHBOROUGH, LEICS. LE11 1EX
WWW.BRUSH.EU

WELDING	WCP004	FIRST PROJ	FUTURE	SCALE	1:1	ISS	DATE	04 APR 2012	CH'D	GRD	ISS	CH'D	GRD
MANUFACTURING TOL	B.S.D.942 Ld5	DRG REF				A	DR'N	KPM	APP	REH2	E	APP	REH2
SURFACE TEXTURE	B.S.D.986 Ls2												

FIRST ANGLE PROJECTION

SPARES - GENERATOR

A0 321447500

ISS E

FRAME CODE BDAX 7-290

SHT 7 OF 7 DRAWING RANGE

ME CAD REV 13

BRUSH PO Box 18 Loughborough Leicestershire LE11 1HJ	This drawing is the property of Brush Electrical Machines Ltd ©. It is supplied on loan in confidence and must be returned immediately on request. No part of the drawing maybe copied or reproduced in any way, nor may the information or design depicted be disclosed without prior written consent of the owner. All rights reserved.	First Angle Projection	Manufacturing References BSD 927 Lx2 BSD 942 Ld5 BSD 986 Ls2

SECTION 18 RECOMMENDED SPARES LIST

This drawing contains a list of spare parts broken down into four categories (Commissioning, Operational, Maintenance and Strategic) with drawings showing their locations. The drawings identify the location of the parts by a balloon reference which correlates with the item number in the list. From the drawings a spare part can be ordered using the part number identified by cross referring the balloon number to the spares list. The quantities shown in the spares list are BEMs recommended holding quantities, whereas a site operator will judge the quantities required to order as replacements.

If a non standard factory fitted part has been used it will be included in the listing quoting the relevant machine serial number.

Item No	Part Number	Description	Quantity	Qty per Kit

COMMISSIONING SPARES

Item No	Part Number	Description	Quantity	Qty per Kit
Exciter spares				
0210	S320965901	RECTIFIER SPARES KIT	1.0000	
		FUSE 450 SBMT		4.0000
		DISC SPRING M12		4.0000
		LOCK PLATE		4.0000
		M12 HEX NUTS GRADB		4.0000
		M10X20 HEX HD SCRE		4.0000
		DISC SPRING M10		4.0000
		LOCK PLATE		4.0000
		LINK - FUSE DIODE		4.0000
		DIODE R6W12033 VO		2.0000
		DIODE R6W02033 VO		2.0000
		DISC SPRING M8		4.0000
		LOCK PLATE		4.0000
		HEX HD SCREW M8X16		4.0000
		UNIAL PASTE		1.0000 TN
		BICCON BX 13PT COMPOUND		1.0000 TN
		INSTRUCT RECTIFIER SPARES		1.0000
0231	S319225001	FUSE KIT (SET OF 5)	1.0000	
		FUSE ATM20		5.0000

OPERATIONAL SPARES

ISS				DRN	ISS					DRN	
DRN	JLA	SPARE PARTS LIST						E 321516700		ISS	A
CHK	JLA										
APP	NSG	ISS		DATE		CHK		APP		DRAWING RANGE	
DATE	02/04/12	FIRST PROJECT	21476	Any hard copy is an uncontrolled version.						SHEET: 1 OF 6	

BRUSH PO Box 18 Loughborough Leicestershire LE11 1HJ	This drawing is the property of Brush Electrical Machines Ltd ©. It is supplied on loan in confidence and must be returned immediately on request. No part of the drawing maybe copied or reproduced in any way, nor may the information or design depicted be disclosed without prior written consent of the owner. All rights reserved.	First Angle Projection	Manufacturing References BSD 927 Lx2 BSD 942 Ld5 BSD 986 Ls2

Generator spares

Item No	Part Number	Description	Quantity	Qty per Kit
0101	S320620301	STATOR COVER GASKET SET	1.0000	
0108	S311745730	GASKET (PIPE) SET OF 4	1.0000	
0120	S317520801	TEMPERATURE DETECTOR - DUPLEX	1.0000	
0130	S025281528	HEATER (STATOR)	1.0000	
0185	S840012001	BRUSH - CARBON	1.0000	

Exciter spares

0200	S315316620	EXCITER AIR DUCT GASKET SET	1.0000	
0201	S315921901	EXCITER SIDE COVER GASKET KIT	1.0000	
		GASKET		2.0000
		GASKET		2.0000
		GASKET		2.0000
0204	S316657502	GASKET (EXCITER) SET OF 2	1.0000	
0205	S314816002	GASKET (EXCITER)	1.0000	
0220	S961503700	ROTOR EARTH FAULT AERIAL	1.0000	
0222	S961502100	ROTOR EARTH FAULT TRANSMITTER	1.0000	
0230	S025281852	HEATER (EXCITER) SET OF 2	1.0000	
0235	S317520809	TEMPERATURE DETECTOR	1.0000	

Bearing spares

0501	S320095901	TOP ENDPLATE GASKET KIT	1.0000	
		ENDFRAME COVER GASKET		1.0000
		COVER PLATE GSKT		1.0000
0502	S311745677	GASKET (BEARING)	1.0000	
0504	S320775801	GASKET - PIPE - SET OF 4	1.0000	
0507	S321512001	SUMP COVERPLATES GASKET KIT	1.0000	
		SUMP COVERPLATE GASKET		1.0000
		GASKET (BEARING)		1.0000
		GASKET (BEARING) SET OF 2		1.0000
0512	S314788301	GASKET (BEARING SEAL) SET OF 2	1.0000	
0528	S320637601	AIR PIPE KIT	1.0000	
		ADAPTOR - FEMALE		1.0000
		STRAIGHT CONN MALE		2.0000
		F/CON. LTB 125 90		2.0000
		45CONN.LTB125-45		1.0000
		FLEXIBLE CONDUIT		2.0000 MT
		FLX.COND. LTR 125		1.0000
		LOCTITE 243 THREAD SEALANT		1.0000
0531	S315236619	BEARING FEED INLET HOSE KIT	1.0000	
		HOSE ASSEMBLY		1.0000
		SEAL WASHER		1.0000
		GASKET (BEARING)		1.0000

BRUSH PO Box 18 Loughborough Leicestershire LE11 1HJ	This drawing is the property of Brush Electrical Machines Ltd ©. It is supplied on loan in confidence and must be returned immediately on request. No part of the drawing maybe copied or reproduced in any way, nor may the information or design depicted be disclosed without prior written consent of the owner. All rights reserved.	First Angle Projection	Manufacturing References BSD 927 Lx2 BSD 942 Ld5 BSD 986 Ls2

Item No	Part Number	Description	Quantity	Qty per Kit
0532	S320627001	RADIAL OIL JACKING HOSE KIT	1.0000	
		GASKET		1.0000
		SEAL WASHER - SET OF 4		1.0000
		HOSE ASSY - INSUL		1.0000
		HOSE ASSY - INSUL		1.0000
0533	S321399801	RADIAL OIL JACKING HOSE KIT	1.0000	
		GASKET		1.0000
		HOSE ASSY - INSUL		2.0000
		SEAL DOWTY WASHER		4.0000
0535	S315236616	BEARING FEED INLET HOSE KIT	1.0000	
		HOSE ASSEMBLY		1.0000
		BONDED SEAL		1.0000
		GASKET (BEARING)		1.0000
0540	S840013102	TEMPERATURE DETECTOR	1.0000	
0542	S840013210	TEMPERATURE DETECTOR	1.0000	
0544	S840014402	TEMPERATURE DETECTOR	1.0000	
0550	S317727901	BEARING SEAL FASTENER KIT	1.0000	
		BUSH - INSULATION		22.0000
		M12 DISC SPRING WASHER		22.0000
		M12 "C"WASHER		22.0000
		SCREW - SELF-LOCKING		22.0000
0551	S317727901	BEARING SEAL FASTENER KIT	1.0000	
		BUSH - INSULATION		22.0000
		M12 DISC SPRING WASHER		22.0000
		M12 "C"WASHER		22.0000
		SCREW - SELF-LOCKING		22.0000
0552	S315233006	BEARING SHAFT SEAL KIT	1.0000	
		SHAFT SEAL		2.0000
		GASKET (BEARING SEAL) SET OF 2		1.0000
		BEARING SEAL FASTENER KIT		2.0000
0553	S315233034	BEARING SHAFT SEAL KIT	1.0000	
		SHAFT SEAL		1.0000
		SHAFT SEAL		1.0000
		GASKET (BEARING SEAL) SET OF 2		1.0000
		BEARING SEAL FASTENER KIT		2.0000
0570	S318406801	PROXIMITY TRANSDUCER	1.0000	
0571	S318365101	PROXIMITY TRANSDUCER	1.0000	
0574	S318365201	PROXIMITY TRANSDUCER	1.0000	

Top Units spares

0650	S018757065	GASKET STRIP - 10 METERES	1.0000

ISS				DRN	ISS					DRN	
DRN	JLA	SPARE PARTS LIST						E 321516700		ISS	
CHK	JLA									A	
APP	NSG	ISS		DATE		CHK		APP		DRAWING RANGE	
DATE	02/04/12	FIRST PROJECT	21476	Any hard copy is an uncontrolled version.				SHEET: 3 OF 6			

BRUSH PO Box 18 Loughborough Leicestershire LE11 1HJ	This drawing is the property of Brush Electrical Machines Ltd ©. It is supplied on loan in confidence and must be returned immediately on request. No part of the drawing maybe copied or reproduced in any way, nor may the information or design depicted be disclosed without prior written consent of the owner. All rights reserved.	First Angle Projection	Manufacturing References BSD 927 Lx2 BSD 942 Ld5 BSD 986 Ls2

Item No	Part Number	Description	Quantity	Qty per Kit
Consumables				
0800	S317609201	METRIC FIXING KIT	1.0000	
		M8X12MM CUP SETSC		20.0000
		HEXAGON SOCKET SCREW		5.0000
		HX NUT M6		10.0000
		8MM HEX NUT		10.0000
		M10 HEX NUT		10.0000
		M12 HEX NUTS GRADB		10.0000
		M16 HEX NUT		10.0000
		HX HD SCRW M6X10		10.0000
		M6X12MM HX HD SCRE		10.0000
		M6X16MM HX HD SCRE		10.0000
		M6X20MM HX HD SCRE		10.0000
		HX HD SCRW M6X25		10.0000
		M6X30MM HX HD SCRE		10.0000
		M6X35MM HX HD SCRE		10.0000
		HX HD SCRW M6X40		10.0000
		M8X16MM HX HD SCRE		10.0000
		M8X20MM HX HD SCRE		10.0000
		SCREW HXH 8MMX25MM		10.0000
		M8X30MM HX HD SCRE		10.0000
		M8X35MM HX HD SCRE		10.0000
		HX HD SCRW M8X40		10.0000
		SCREW HEX HD M8X45		10.0000
		HX DH SCRW M8X50		10.0000
		HX HD SCW 8X60		10.0000
		M10X16MM HX HD SCR		10.0000
		M10X20MM HX HD SCR		10.0000
		M10X25SCREWS		10.0000
		M10X30MM HX HD SCR		10.0000
		M10X35MM HX HD SCR		10.0000
		SCRW HX HD M10X40		10.0000
		M10X45MM HX HD SCR		10.0000
		M10X50MM HX HD SCR		10.0000
		HX HD SCRW M10X55		10.0000
		M10X60MM HX HD SCR		10.0000
		SCREW HXH M10X70MM		10.0000
		M12X25MM HX HD SCR		10.0000
		M12X30MM HX HD SCR		10.0000
		M12X35MM HX HD SCR		10.0000
		SCREW HXH M12X40MM		10.0000
		M12X45MM HX HD SCR		10.0000
		M12X50MM HX HD SCR		10.0000
		M12X55MM HX HD SCR		10.0000
		12MMX60MM HX HD SC		10.0000
		M12X65 H.H.SCREW		10.0000
		M12X70MM HX HD SCR		10.0000
		HEX SCREW M16X20		10.0000

ISS				DRN	ISS					DRN	
DRN	JLA	SPARE PARTS LIST						E 321516700		ISS	
CHK	JLA									A	
APP	NSG	ISS		DATE		CHK		APP		DRAWING RANGE	
DATE	02/04/12	FIRST PROJECT	21476	**Any hard copy is an uncontrolled version.**					SHEET: 4 OF 6		

BRUSH PO Box 18 Loughborough Leicestershire LE11 1HJ	This drawing is the property of Brush Electrical Machines Ltd ®. It is supplied on loan in confidence and must be returned immediately on request. No part of the drawing maybe copied or reproduced in any way, nor may the information or design depicted be disclosed without prior written consent of the owner. All rights reserved.	First Angle Projection	Manufacturing References BSD 927 Lx2 BSD 942 Ld5 BSD 986 Ls2

Item No	Part Number	Description	Quantity	Qty per Kit
		M16X30MM HX HD SCR	10.0000	
		M16X35MM HX HD SCR		10.0000
		M16X40MM HX HD SCR		10.0000
		M16X45MM HX HD SCR		10.0000
		M16X50MM HX HD SCR		10.0000
		M6 REC SEC WASHER		20.0000
		SPRING WASHER M8		20.0000
		M10 REC SEC WASHER		20.0000
		M12 REC SEC WASHER		20.0000
		M16 REC SEC WASHER		20.0000
		M6 WASHER PLAIN		20.0000
		PLAIN WASHER M8		20.0000
		M10 ST FORM A WASH		20.0000
		M12 ST FORM A WASH		20.0000
		M16 ST FORM A WASH		20.0000
0801	S321375901	COMPOUND & TAPE KIT	1.0000	
		ELECTRICAL JOINTING COMPOUND		1.0000
		JOINTING COMPOUND SET OF 3		1.0000
		SEALING COMPOUND SET OF 3		1.0000
		LOCKING COMPOUND		1.0000
		SELF AMALGAMATING TAPE		1.0000
		WEATHERPROOF FILLE SET OF 5		1.0000
		SEALANT		1.0000
0810	S318992501	LOCKING PLATES (SET OF 20)	1.0000	

MAINTENANCE SPARES

Generator spares

0186	S840012101	BRUSH HOLDER AND CLAMP	1.0000

STRATEGIC SPARES

Exciter spares

0240	S317946701	OIL PUMP	1.0000
0241	S317947301	GEAR COUPLING	1.0000

Bearing Bush Non Exciter End spares

0300	S317706700	BEARING BUSH	1.0000

Bearing Bush Exciter End spares

0400	S317706900	BEARING BUSH	1.0000

ISS				DRN	ISS					DRN	
DRN	JLA	SPARE PARTS LIST						E 321516700		ISS	
CHK	JLA									A	
APP	NSG	ISS		DATE		CHK		APP		DRAWING RANGE	
DATE	02/04/12	FIRST PROJECT	21476	Any hard copy is an uncontrolled version.				SHEET: 5 OF 6			

BRUSH PO Box 18 Loughborough Leicestershire LE11 1HJ	This drawing is the property of Brush Electrical Machines Ltd ©. It is supplied on loan in confidence and must be returned immediately on request. No part of the drawing maybe copied or reproduced in any way, nor may the information or design depicted be disclosed without prior written consent of the owner. All rights reserved.	First Angle Projection	Manufacturing References BSD 927 Lx2 BSD 942 Ld5 BSD 986 Ls2

Item No	Part Number	Description	Quantity	Qty per Kit
		Bearing spares		
0530	S313568201	NON RETURN VALVE	1.0000	

ATTACHED DRAWINGS

ISS				DRN	ISS					DRN	
DRN	JLA	SPARE PARTS LIST						E 321516700		ISS	A
CHK	JLA										
APP	NSG	ISS		DATE		CHK		APP		DRAWING RANGE	
DATE	02/04/12	FIRST PROJECT	21476	Any hard copy is an uncontrolled version.						SHEET: 6 OF 6	


BRUSH

BRUSH GROUP HQ (GB)
NOTTINGHAM ROAD
LOUGHBOROUGH
LEICESTERSHIRE,
LE11 1EX UNITED KINGDOM
T +44 (0) 1509 611511
E SALESUK@BRUSH.EU

BRUSH HMA B.V (NL)
PO BOX 3007
2980 DA
RIDDERKERK, THE NETHERLANDS
T +31 (0) 180 445500
E SALESNL@BRUSH.EU

BRUSH SEM S.R.O(CZ)
TŘ. EDVARDA BENEŠE 39/564
301 00 PLZEŇ
CZECH REPUBLIC
T +420 378 210 111
E SALESCZ@BRUSH.EU

BRUSH (US)
15110 NORTHWEST FREEWAY,
SUITE 150, HOUSTON, TEXAS. 77040.
UNITED STATES OF AMERICA.
T +1 281 580 1314
E SALESUS@BRUSH.EU

BRUSH GMS (US)
601 BRADDOCK AVE,
TURTLE CREEK, PA,
15145, USA
T +1 412 829 7500
E SALESUS@BRUSH.EU

BRUSH (AE)
PO BOX 390815
DUBAI
UNITED ARAB EMIRATES
T +971 4362 6391
E PETER.BROWN@BRUSH.EU

BRUSH (IN)
SPECTRUM TECHNOLOGIES
801A, A WING,
BSEL TECH PARK,
SECTOR-30A, VASHI,
NAVI MUMBAI - 400705, INDIA.
T + 91 22 27810091/92
E SALES@SOOPL.IN

BRUSH (KR)
ENERTOPIA / AWONS
1203 NONHYEON-ROYAL PALACE
249-6 NONHYEON-DONG GANGNAM-GU
135-010 SEOUL, KOREA
T +65 6848 2146
E PHY@ENERTOPIA.FR

BRUSH JAPAN KK (JP)
1139 THE SOHO
2-7-4, AOMI
KOUTOU KU, TOKYO
135-0064, JAPAN
T +81 3 6380 7091
E SALESJP@BRUSH.EU

BRUSH (SG)
TGM GLOBAL PTE LTD
BLOCK 3026 UBI ROAD 1
#03-162,
SINGAPORE 408719.
T +65 6848 2146
E SALES@GLOBAL-TGM.COM

AFTERMARKET ENQUIRIES

Region	Office Hours	Emergency 24/7	Training Courses	Email
Americas	+1 281 580 1314	+1 281 639 1375	+1 281 580 1314	serviceus@brush.eu
Asia	+44 7985 417891	+44 844 3326527	+44 7985 417891	servicejp@brush.eu
Middle East	+971 5010 12795	+44 844 3326527	+971 5010 12795	serviceme@brush.eu
UK	+44 1509 611511	+44 844 3326527	+44 1509 612219	serviceuk@brush.eu
Central Europe	+31 180 445500	+31 180 445501	+31 180 445500	servicenl@brush.eu
Eastern Europe	+420 378 210717	+420 739 586812	+420 378 210717	servicecz@brush.eu

This publication is issued to provide outline information only which (unless agreed by the company in writing) may not be used, applied or reproduced for any purpose or form part of any order or contract or be regarded as a representation relating to products or services concerned. The company reserves the right to alter without notice the specification, design, price or conditions of supply of any product or service.

BRUSH and the BRUSH logo are copyright protected trademarks. All other company and product names are acknowledged as being the trademarks or registered trademarks of their respective companies.

THIS DOCUMENT AND ITS CONTENTS ARE PROVIDED "AS IS", WITH NO REPRESENTATIONS OR WARRANTIES OF ANY KIND, WHETHER EXPRESS OR IMPLIED, INCLUDING BUT NOT LIMITED TO WARRANTIES OF DESIGN, MERCHANTABILITY, OR FITNESS FOR A PARTICULAR PURPOSE. ALL OTHER LIABILITY ARISING FROM RELIANCE UPON ANY INFORMATION CONTAINED HEREIN IS EXPRESSLY DISCLAIMED.

Printed in the UK

www.brush.eu
www.brushparts.eu

Operating & Maintenance Manual

Appendices



Generator Type: **BDAX62-170ER**
Project: **Trailer Mounted Turbogenerator**

Copyright Notice

© 2013-2014 Brush Electrical Machines Ltd. All rights reserved.

Document & Machine Numbers

Manual Number: TP0002020 **Issue:** B

Publication Date: March 2014

Machine Number(s): 923065.010, 923233.010, 923235.010, 923237.010, 923327.010, 923341.010, 923385.010, 923387.010, 923389.010, 923391.010, 923405.010, 923407.010, 923409.010, 923411.010, 923466.010, 923611.010, 923615.010, 923617.010

Preface

Congratulations on your choice of precision engineered product from BRUSH, the world's leading independent manufacturer of turbogenerators, combining the resources of three major manufacturers of generators for gas turbine, steam turbine and hydro-turbine drive. With manufacturing plants in the UK, the Netherlands and the Czech Republic and with customers across all continents, BRUSH has a truly global presence.

Warnings, Notes and Instructions

The purpose of this manual is to provide information and advice on supplied equipment.

Symbols used in the manual are as follows:



General Notice

Instructions that must be followed.



Ear Protection Notice

Instructions that must be followed.



Important Notice

Important Instructions that must be followed.



General Hazard

Caution to be exercised. Appropriate safety measures to be taken.



Electrical Hazard

Caution to be exercised. Appropriate safety measures to be taken.



Substance Hazard

Caution to be exercised. Appropriate safety measures to be taken.

Cross-document and website hyperlinks are underlined blue.

How to Use the Manual

Mandatory Notice

It is important that any persons responsible for equipment installation, commissioning, operation and maintenance are provided with access to this document, together with relevant/associated additional volumes and third-party information.

It is recommended that prior to undertaking any installation, commissioning, operation or maintenance activities on the equipment, this manual and any associated documentation should be read in its entirety in order to gain a better understanding of system operation.

This manual should be read in conjunction with contract specific, drawings and other first and third-party associated documentation.

All pages and topic headings are numbered for easy reference. Cross-reference(s) to associated paragraphs and documentation is included where appropriate. When referencing particular paragraphs in communications, it is important to specify the Manual Number and the Issue Reference.

The manual, and any amendments, should be maintained for the lifetime of the equipment.

Where this document is included as part of a specific contract, drawings are provided in a separate document volume. First and third-party equipment documents will also be provided as part of the overall contract documentation package.

Copies and Revisions

Additional copies of the latest available versions of manuals are available from BRUSH Aftermarket (See the back cover for contact details). A nominal charge *may* be made for this service.

Feedback

We are constantly seeking to improve the quality and reliability of our products, and we actively encourage user feedback.

Any comments should be addressed to your usual representative, or to BRUSH Aftermarket.

Service and Spares

Quotations for Service and Spares can be obtained from BRUSH Aftermarket at the contact address provided on this document's back cover.

Spare parts information, including prices and lead times, can be obtained from the following website address: http://www.brushparts.eu

BRUSH Aftermarket provides service support 24 hours a day, 7 days a week, supply first class replacement parts, carry out service inspections and maintenance programmes, upgrades and repairs, and comprehensive training programmes for both BRUSH and third-party generators and ancillary products. Further information on BRUSH Aftermarket can be found on our http://www.brush.eu.

Contents

Appendix A. COSHH Data for Standard Components 5

Appendix B. Generator Layout, Rating & Frame Designation..... 6

B.1 Typical DAX Turbogenerator Layout 6
B.2 Typical Generator Rating Plate 7
B.3 DAX Frame Designation 7

Appendix C. Resistance Temperature Detectors (RTD) 8

C.1 Introduction 8
C.2 RTD Configurations 9
C.2.1 Two-wire RTD 9
C.2.2 Three-wire RTD 9
C.2.3 Duplex RTD 10
C.2.4 Four-wire RTD 10
C.2.5 Compensating Loop RTD 11

Appendix D. Pipework Compression Fittings 14

D.1 Swagelok® Tube Fittings 14
D.1.1 Installation Instructions 14
D.1.2 Gap Inspection Gauges 15
D.1.3 Retightening Instructions 18
D.1.3.1. Preswaging Instructions 19
D.1.4 Installation Instructions 20
D.1.4.1. Port Connector 20
D.1.4.2. Plug 20
D.1.4.3. Swagelok To AN Adapter 21
D.1.4.4. SAE/MS Straight Thread Positionable Elbows And Tees 21
D.1.5 Swagelok Adaptors 21
D.1.5.1. Solve Alignment Problems 21
D.1.5.2. Swagelok Adaptors Example 22
D.1.5.3. Installation of Swagelok Adaptors 24
D.1.6 How To Use Swagelok Adaptors And Reducers 25
D.1.6.1. Installation Instructions 25
D.1.7 Tubing Installation 26
D.1.8 Interchangeability 27
D.1.8.1. Safe Component Selection 27
D.1.8.2. Caution 27
D.1.9 Safety Considerations 27
D.2 Parker A-LOK Tube Fittings 29
D.2.1 Assembly and Remake Instructions 29
D.2.2 Gaugeability Instructions 31
D.3 Walterscheid Profile Ring Tube Fittings 32
D.3.1 Turning Angle Controlled Assembly In Pre-Assembly Adaptor 32
D.3.1.1. Tube Selection 32
D.3.1.2. Note 32
D.3.1.3. Assembly Instructions 33

D.4 Hoke Gyrolok Tube Fittings 37
D.4.1 *HOKE* Gyrolok Assembly Instructions 37
D.4.1.1. Sizes 1", 25mm And Smaller 37
D.4.1.2. Manual Assembly 37
D.4.1.3. Presetting Tool Assembly 37
D.4.1.4. Remaking a Fitting End, or Assembling a Fitting Body to Tubing with Preset-Ferrules 39
D.4.1.5. Sizes 1¼", 28mm and Larger 39
D.4.1.6. Remake Instructions 39
D.4.1.7. All Sizes 39
D.4.1.8. Installations That Do Not Involve Setting of Ferrules 39
D.4.1.9. When assembling a Gyrolok plug onto a Gyrolok body: 39
D.4.1.10. When initially assembling the machined ferrule end of a Gyrolok port connector: 39
D.4.1.11. *HOKE* Gyrogage Assembly and Inspection Tool 40
D.4.2 Pre-Setting Tool (PST) 40
D.4.3 Hydraulic Pre-Setting Tool 41
D.4.3.1. How It Works 41
D.4.4 *HOKE* Gyrolok Safety Instructions 41

Appendix A. COSHH Data for Standard Components

Table A-1 COSHH Substance Table

SUBSTANCE TYPE	SUBSTANCE	USAGE	HEALTH HAZARD DATA	PERSONAL PROTECTION/FIRST AID			
				EYE CONTACT	SKIN CONTACT	INHILATION	INGESTION
DEGREASANT/ CLEANER (Oil Based)	Low toxane (highly refined paraffin) or Orange Oil	Degreasant/ Cleaner removal of preservative	Flash Point > 55°C. Use good ventilation	General care. RINSE WITH FRESH WATER	Wear PVC gloves/ barrier creams. RINSE WITH FRESH WATER	General care. REMOVE TO FRESH AIR	Avoid. DRINK MILK/ WATER. DO NOT VOMIT. CALL FIRST AID / DOCTOR
DEGREASANT/ CLEANER (Spirit Based)	Industrial Meths AEROSOL FORM ONLY	Brake disc cleaning only. USE SMALL QUANTITIES	EXTREMELY FLAMMABLE Use good ventilation	General care. RINSE WITH FRESH WATER	Wear PVC gloves/ barrier creams. RINSE WITH FRESH WATER	General care. REMOVE TO FRESH AIR	Avoid. DRINK MILK/ WATER. DO NOT VOMIT. CALL FIRST AID / DOCTOR
DO NOT USE: PETROL/GASOLINE, 111 TRICHLORETHANE (GENKLENE) OR CARBON TETRACHLORIDE							
ADHESIVE/ SEALANT	Loctite 542 Loctite 572 Loctite 760 Loctite 770 (Activator based on solvent) Quick Stick	Fine thread sealant Pipe sealant (Maintenance) Sealant Silcone Rubber Adhesive Black Rubber Adhesive	Do not inhale vapours. Use adequate ventilation	General care. FLUSH WITH WATER FOR 15 MINUTES - CALL FIRST AID / DOCTOR	General care. WASH WITH SOAP AND WATER	General care. REMOVE TO FRESH AIR	Avoid. DRINK MILK/ WATER. DO NOT VOMIT CALL FIRST AID / DOCTOR
DO NOT USE LOCTITE PRODUCTS WITH EXPOSED BROKEN SKIN							
JOINTING COMPOUND	Hylomar PL32 (Medium)	Sealant for bearings and other joints	Avoid bad ventilation	Wear goggles. FLUSH WITH WATER FOR 15 MINUTES	Wear PVC gloves. WASH WITH SOAP AND WATER	General care. REMOVE TO FRESH AIR - DO NOT EXERCISE	Avoid. DRINK MILK/ WATER. DO NOT VOMIT
JOINTING COMPOUND	Biccon X13 PT	Diode mounting paste	None	Wear goggles. FLUSH WITH WATER	Wear PVC gloves. WASH WITH SOAP AND WATER	None	None
JOINTING COMPOUND	Unial	Electrical joints	Avoid open cuts or sores. Wipe with white spirit soaked rag. Rinse with soap and water	Wear goggles if contact likely. FLUSH WITH WATER	Wear PVC gloves/ barrier creams. RINSE WITH SOAP AND WATER	General care. REMOVE TO FRESH AIR	Avoid. DRINK WATER. DO NOT VOMIT
GREASES	Lithium based Mobilplex 48 Castrol Helv.O Silicone based Molybdenum disulphide	Diode fixing	Use adequate ventilation	Wear goggles if contact likely. FLUSH WITH WATER	Good hygiene. WASH WITH SOAP AND WATER	General care. REMOVE TO FRESH AIR	Avoid. DRINK WATER. DO NOT VOMIT
MINERAL OILS	Mobil DTE oils (All grades - ISO VG Class)	Bearing lubrication oil	Exposure limit 5.0 mg/m^3 for oil mist	None. FLUSH WITH WATER	Good hygiene. WASH WITH SOAP AND WATER	None with good ventilation. NONE	Avoid. If in discomfort - CALL FIRST AID / DOCTOR
INSULATION MATERIALS	Epoxy Novolac Corona Paint Glass Cord Synthetic Resin Shellac/Nomex Micanite Epoxy CHS531 Micares 730R	Insulation materials may be exposed during maintenance/ repair Sealing compound/lamination impregnation/adhesive Cable sealing	All materials are inert. Physical sanding/ abrasion MAY CREATE HARMFUL DUST	Wear goggles. FLUSH WITH WATER CALL FIRST AID / DOCTOR	Good hygiene. WASH WITH SOAP AND WATER	Wear disposable dust respirators 3M type 8709. REMOVE TO FRESH AIR	General care. DRINK WATER. DO NOT VOMIT CALL FIRST AID / DOCTOR
FILLER	Epoxy resin putty	Armature coil gap fill repair only	Dry sanding of epoxy paints and fillers containing chromates. WILL CREATE HARMFUL DUST	Wear goggles. FLUSH WITH WATER	Wear vinyl gloves/ barrier creams - good hygiene. WASH WITH SOAP AND WATER	No risks with good ventilation. Is sanding wear Racal Breathe Easy unit with toxic dist cartridge REMOVE TO FRESH AIR	Avoid. DRINK WATER DO NOT VOMIT
PAINT MATERIALS	Dry paint finishes	Surface finish/ protection may be exposed during repair	Dry sanding of epoxy paints and fillers containing chromates. WILL CREATE HARMFUL DUST	Wear goggles. FLUSH WITH WATER	Good hygiene. WASH WITH SOAP AND WATER	Wear Racal Breather Easy unit with toxic dust cartridge REMOVE TO FRESH AIR	General care. DRINK WATER. DO NOT VOMIT
	Thinners 6003 Feidal ZG13	Paint thinner Steelwork paint	Eye and skin irritant	Wear goggles. FLUSH WITH WATER	Good hygiene. WASH WITH SOAP AND WATER	General care. REMOVE TO FRESH AIR	General care. DRINK WATER. DO NOT VOMIT CALL FIRST AID / DOCTOR
	Tectyl 506	Anti-rust preservative	Headache, vomitting Narcotic effect when inhaled	Wear goggles. FLUSH WITH WATER	Good hygiene. WASH WITH SOAP AND WATER	General care. REMOVE TO FRESH AIR	General care. DO NOT VOMIT CALL FIRST AID / DOCTOR
	Tectyl 511M	Anti-rust preservative	Headache, vomitting	Wear goggles. FLUSH WITH WATER	Good hygiene. WASH WITH SOAP AND WATER	General care. REMOVE TO FRESH AIR	General care. DO NOT VOMIT CALL FIRST AID / DOCTOR
AIR CONTAMINANT	Airborne dust particles	Cooling air circuit filters (Maintenance)	During maintenance a dust hazard may exist	Wear goggles. FLUSH WITH WATER	Good hygiene. WASH WITH SOAP AND WATER	Wear disposable dust respirators 3M type 8709. REMOVE TO FRESH AIR	General care. DRINK WATER. DO NOT VOMIT

Appendix B. Generator Layout, Rating & Frame Designation

B.1 Typical DAX Turbogenerator Layout

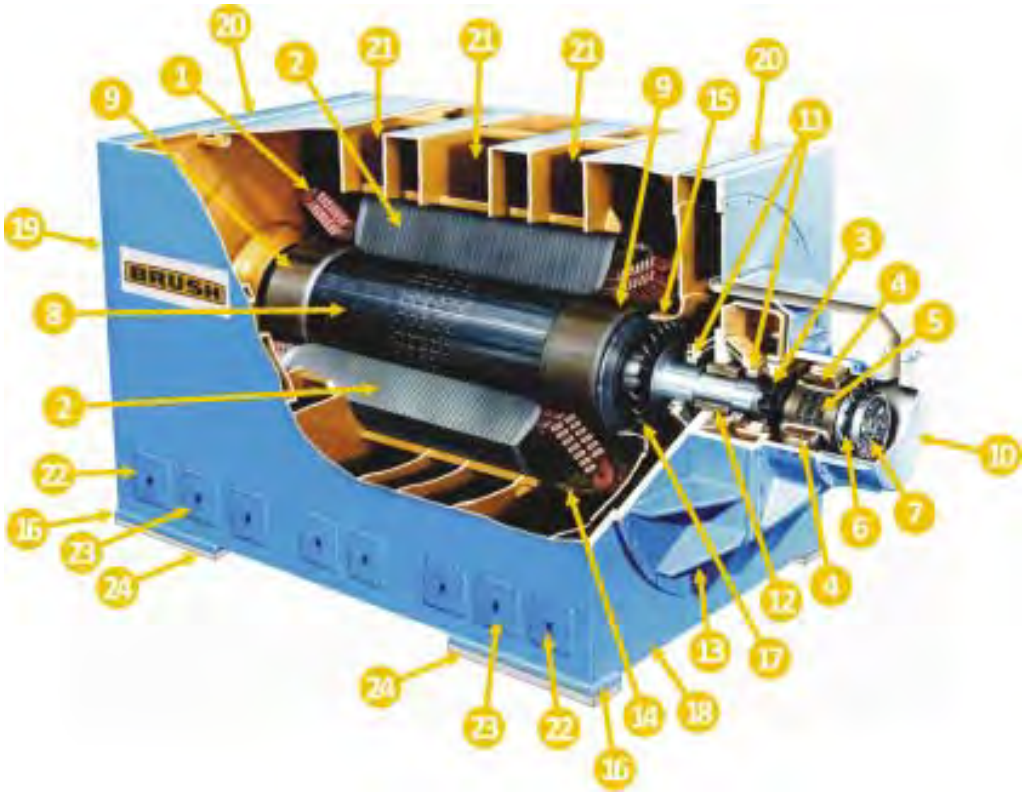

Figure B-1 Typical DAX Turbogenerator Component Layout

1. Stator (armature) winding
2. Stator core
3. Permanent magnet pilot exciter (PMG)
4. Exciter field
5. Exciter armature
6. Exciter fan
7. Rotating rectifier (diode wheel)
8. Rotor
9. Endcap (retaining ring)
10. Non-drive (exciter) end (NDE/EE)
11. Oil seals
12. Main bearing (one each end)
13. Endframe
14. Winding supports
15. Fan shroud
16. Mounting feet
17. Shaft mounted cooling fan (one each end)
18. Stator frame
19. Drive (coupling) end/non-exciter end (DE/NEE)
20. Cooling air inlets
21. Cooling air exhausts
22. Access cover for holding down bolts
23. Access cover for anti-condensation heaters
24. Soleplates

B.2 Typical Generator Rating Plate

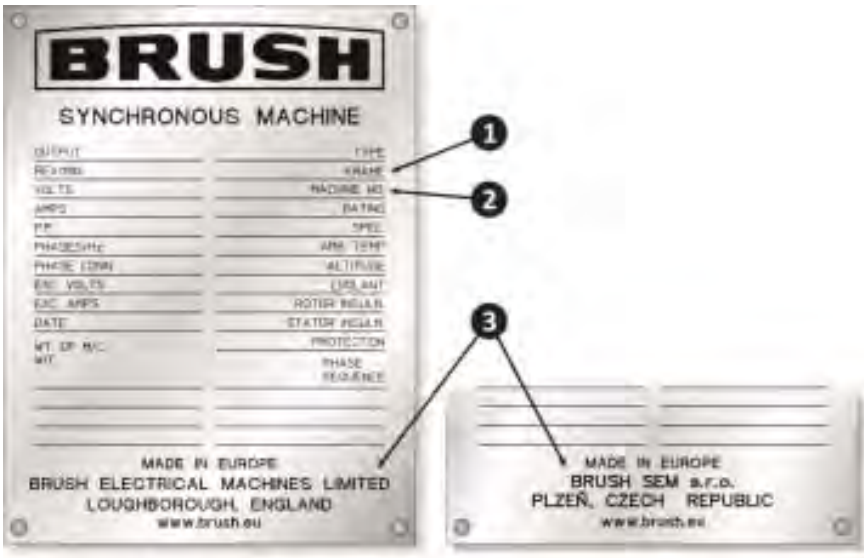

Figure B-2 Typical Turbogenerator Rating Plates

1. Frame designation code—given in the format shown in Figure B-3, below.
2. Machine number (generator serial number)
3. Generator build locations.

*sometimes referred to as project or contract number.

B.3 DAX Frame Designation

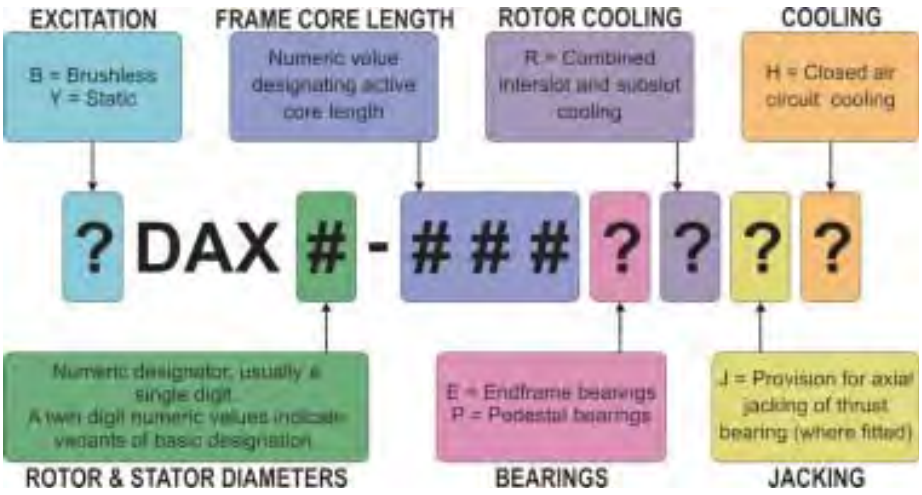

Figure B-3 DAX Turbogenerator Frame Designation

Appendix C. Resistance Temperature Detectors (RTD)

C.1 Introduction

For precise temperature measurement the Platinum Resistance Thermometer offers the best overall advantage of any device and the ceramic bodied, wire-wound platinum resistance temperature detector has the highest performance, when compared to 'film' and 'glassed' type detectors.

Detectors are of the wire wound type, in which the platinum winding is partially supported by a high temperature glass adhesive, inside a ceramic tube. This construction provides a detector in which stability, repeatability and accuracy are of the highest available.

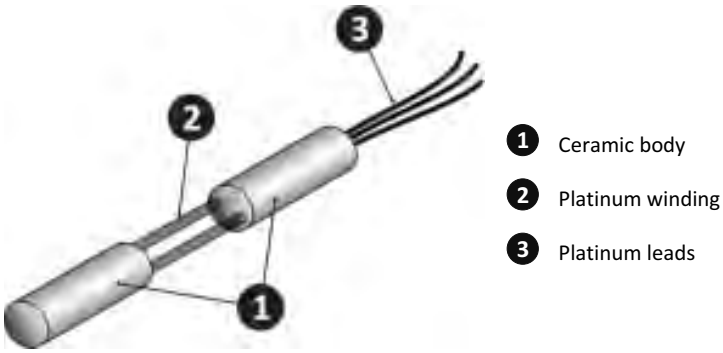

Figure C-1 Platinum RTD Construction

RTDs operate as positive temperature coefficient devices when an excitation voltage is applied to convert changes in temperature to voltage signals by the measurement of resistance. Platinum has the properties necessary for use in RTD elements due to its resistance to temperature characteristics that increase in resistance as temperature increases and, conversely, decrease in resistance as temperature decreases. Platinum is best suited for RTD generator applications because of its linear resistance-temperature characteristics, its high coefficient of resistance, and its ability to withstand repeated temperature cycles. The change in electrical resistance to temperature for a material is termed the ‘temperature coefficient of resistance’. For temperature resistance values, refer to Table C1 and/or C2.

C.2 RTD Configurations

RTDs are available in two, three and four wire configuration. Selection of the lead wire configuration is usually based on the instrumentation, desired accuracy and stability.

C.2.1 Two-wire RTD

One lead wire is attached to each side of the element, see Figure G-2. This is the least accurate due to the inability to compensate for lead length resistance.

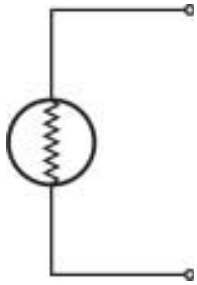

Figure C-2 Two-wire RTD

C.2.2 Three-wire RTD

This is the most commonly used configuration, see Figure G-3. By adding a third lead to one end of the sensing element instrumentation can detect and compensate for lead resistance.

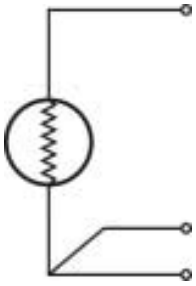

Figure C-3 Three-wire RTD

C.2.3 Duplex RTD

RTDs are available in duplex construction in any of the wire configurations, see Figure G-4. With wire wound bulbs two sets of windings are used. In thin film, two elements are set in place side-by-side. The second element may be used as a spare, testing purposes or connection to a second instrument. In most of Thermo Electric ordering codes a "D" is added to the prefix to denote duplex construction.

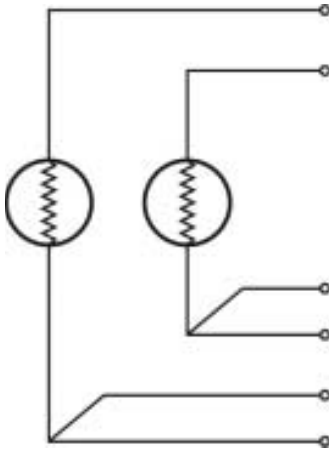

Figure C-4 Duplex RTD

C.2.4 Four-wire RTD

Four wires provide for the most accurate method of RTD measurement, see Figure G-5. A constant current is carried through two leads with the remaining two used to measure the voltage drop.

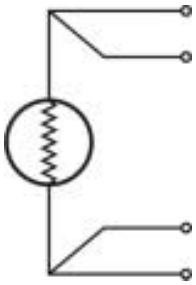

Figure C-5 Four-wire RTD

C.2.5 Compensating Loop RTD

A compensating loop is an extra pair of lead wires that have the same resistance as the actual lead wires but which are not connected to the RTD element, see Figure G-6. Its purpose is to correct for lead wire resistance errors when making temperature measurement.

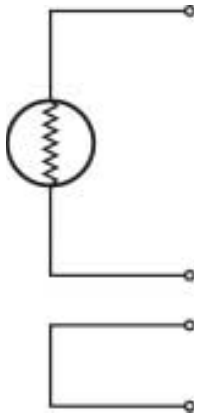

Figure C-6 Compensation Loop RTD

Table C-1 Temperature Resistance Table -200°C to +211°C

°C	Ω	°C	Ω	°C	Ω	°C	Ω	°C	Ω	°C	Ω	°C	Ω
-200	18.4936	-141	43.4550	-82	67.5214	-23	90.9803	35	113.6069	94	136.2225	153	158.4342
-199	18.9262	-140	43.8694	-81	67.9234	-22	91.3738	36	113.9936	95	136.6024	154	158.8072
-198	19.3585	-139	44.2835	-80	68.3253	-21	91.7671	37	114.3802	96	136.9821	155	159.1801
-197	19.7904	-138	44.6974	-79	68.7270	-20	92.604	38	114.7666	97	137.3617	156	159.5528
-196	20.2219	-137	45.1110	-78	69.1285	-19	92.5535	39	115.1530	98	137.7412	157	159.9255
-195	20.6530	-136	45.5244	-77	69.5299	-18	92.9465	40	115.5392	99	138.1206	158	160.2980
-194	21.0838	-135	45.9375	-76	69.9311	-17	93.3394	41	115.9253	100	138.4998	159	160.6704
-193	21.5143	-134	46.3504	-75	70.3321	-16	93.7321	42	116.3113	101	138.8789	160	161.0427
-192	21.9444	-133	46.7630	-74	70.7330	-15	94.1248	43	116.6971	102	139.2580	161	161.4149
-191	22.3741	-132	47.1754	-73	71.1337	-14	94.5173	44	117.0829	103	139.6369	162	161.7869
-190	22.8035	-131	47.5876	-72	71.5342	-13	94.9097	45	117.4685	104	140.0157	163	162.1589
-189	23.2325	-130	47.9995	-71	71.9346	-12	95.3020	46	117.8540	105	140.3943	164	162.5307
-188	23.6612	-129	48.4112	-70	72.3348	-11	95.6941	47	118.2394	106	140.7729	165	162.9024
-187	24.0895	-128	48.8227	-69	72.7348	-10	96.0862	48	118.6247	107	141.1513	166	163.2740
-186	24.5175	-127	49.2339	-68	73.1347	-9	96.4781	49	119.0099	108	141.5297	167	163.6455
-185	24.9451	-126	49.6449	-67	73.5345	-8	96.8699	50	119.3950	109	141.9079	168	164.0169
-184	25.3725	-125	50.0557	-66	73.9341	-7	97.2615	51	119.7799	110	142.2860	169	164.3881
-183	25.7994	-124	50.4662	-65	74.3335	-6	97.6531	52	120.1647	111	142.6639	170	164.7593
-182	26.2261	-123	50.8765	-64	74.7328	-5	98.0445	53	120.5494	112	143.0418	171	165.1303
-181	26.6524	-122	51.2866	-63	75.1319	-4	98.4359	54	120.9340	113	143.4196	172	165.5012
-180	27.0783	-121	51.6964	-62	75.5309	-3	98.8271	55	121.3185	114	143.7972	173	165.8719
-179	27.5040	-120	52.1061	-61	75.9297	-2	99.2182	56	121.7029	115	144.1747	174	166.2426
-178	27.9293	-119	52.5155	-60	76.3284	-1	99.6091	57	122.0871	116	144.5521	175	166.6132
-177	28.3543	-118	52.9247	-59	76.7269	-0	100.000	58	122.4712	117	144.9294	176	166.9836
-176	28.7790	-117	53.3337	-58	77.1252	0	100.000	59	122.8552	118	145.3065	177	167.3539
-175	29.2033	-116	53.7424	-57	77.5235	1	100.3907	60	123.2391	119	145.6836	178	167.7241
-174	29.6274	-115	54.1510	-56	77.9215	2	100.7814	61	123.6229	120	146.0605	179	168.0942
-173	30.0511	-114	54.5593	-55	78.3195	3	101.1719	62	124.0066	121	146.4373	180	168.4642
-172	30.4745	-113	54.9674	-54	78.7173	4	101.5623	63	124.3901	122	146.8140	181	168.8340
-171	30.8976	-112	55.3753	-53	79.1149	5	101.9525	64	124.7736	123	147.1906	182	169.2038
-170	31.3204	-111	55.7830	-52	79.5124	6	102.3427	65	125.1569	124	147.5671	183	169.5734
-169	31.7428	-110	56.1905	-51	79.9097	7	102.7328	66	125.5401	125	147.9435	184	169.9429
-168	32.1650	-109	56.5978	-50	80.3069	8	103.1227	67	125.9232	126	148.3197	185	170.3123
-167	32.5869	-108	57.0049	-49	80.7040	9	103.5125	68	126.3061	127	148.6958	186	170.6816
-166	33.0084	-107	57.4118	-48	81.1009	10	103.9022	69	126.6890	128	149.0718	187	171.0507
-165	33.4297	-106	57.8184	-47	81.4977	11	104.2918	70	127.0717	129	149.4477	188	171.4198
-164	33.8507	-105	58.2249	-46	81.8944	12	104.6812	71	127.4543	130	149.8235	189	171.7887
-163	34.2713	-104	58.6312	-45	82.2909	13	105.0706	72	127.8368	131	150.1991	190	172.1575
-162	34.6917	-103	59.0373	-44	82.6872	14	105.4598	73	128.2192	132	150.5747	191	172.5262
-161	35.1118	-102	59.4432	-43	83.0835	15	105.8489	74	128.6015	133	150.9501	192	172.8948
-160	35.5316	-101	59.8488	-42	83.4796	16	106.2379	75	128.9836	134	151.3254	193	173.2633
-159	35.9511	-100	60.2543	-41	83.8755	17	106.6268	76	129.3657	135	151.7006	194	173.6316
-158	36.3703	-99	60.6596	-40	84.2713	18	107.0156	77	129.7476	136	152.0757	195	173.9998
-157	36.7893	-98	61.0647	-39	84.6670	19	107.4043	78	130.1294	137	152.4506	196	174.3679
-156	37.2079	-97	61.4697	-38	85.0626	20	107.7928	79	130.5111	138	152.8255	197	174.7359
-155	37.6263	-96	61.8744	-37	85.4580	21	108.1812	80	130.8927	139	153.2002	198	175.1038
-154	38.0444	-95	62.2789	-36	85.8533	22	108.5695	81	131.2741	140	153.5748	199	175.4716
-153	38.4622	-94	62.6833	-35	86.2485	23	108.9577	82	131.6555	141	153.9493	200	175.8392
-152	38.8797	-93	63.0875	-34	86.6435	24	109.3458	83	132.0367	142	154.3237	201	176.2068
-151	39.2970	-92	63.4914	-33	87.0384	25	109.7337	84	132.4178	143	154.6980	202	176.5742
-150	39.7140	-91	63.8952	-32	87.4331	26	110.1216	85	132.7988	144	155.0721	203	176.9415
-149	40.1307	-90	64.2989	-31	87.8278	27	110.5093	86	133.1797	145	155.4462	204	177.3087
-148	40.5472	-89	64.7023	-30	88.2223	28	110.8969	87	133.5605	146	155.8201	205	177.6758
-147	40.9634	-88	65.1056	-29	88.6167	29	111.2844	88	133.9411	147	156.1939	206	178.0427
-146	41.3793	-87	65.5086	-28	89.0109	30	111.6718	89	134.3216	148	156.5676	207	178.4095
-145	41.7950	-86	65.9115	-27	89.4050	31	112.0590	90	134.7020	149	156.9411	208	178.7763
-144	42.2104	-85	66.3143	-26	89.7990	32	112.4462	91	135.0823	150	157.3146	209	179.1429
-143	42.6255	-84	66.7168	-25	90.1929	33	112.8332	92	135.4625	151	157.6879	210	179.5094
-142	43.0404	-83	67.1192	-24	90.5866	34	113.2201	93	135.8426	152	158.0611	211	179.8757

Table C-2 Temperature Resistance Table +212°C to +630°C

°C	Ω	°C	Ω	°C	Ω	°C	Ω	°C	Ω	°C	Ω	°C	Ω
212	180.2420	272	202.0051	332	223.3505	392	244.2782	452	264.7881	512	284.8803	572	304.5547
213	180.6081	273	202.3643	333	223.7027	393	244.6234	453	265.1264	513	285.2116	573	304.8791
214	180.9742	274	202.7234	334	224.0548	394	244.9686	454	265.4646	514	285.5428	574	305.2033
215	181.3401	275	203.0823	335	224.4068	395	245.3136	455	265.8026	515	285.8739	575	305.5275
216	181.7059	276	203.4411	336	224.7587	396	245.6585	456	266.1406	516	286.2049	576	305.8515
217	182.0715	277	203.7999	337	225.1104	397	246.0033	457	266.4784	517	286.5358	577	306.1754
218	182.4371	278	204.1585	338	225.4621	398	246.3480	458	266.8161	518	286.8665	578	306.4992
219	182.8026	279	204.5169	339	225.8136	399	246.6925	459	267.1537	519	287.1971	579	306.8229
220	183.1679	280	204.8753	340	226.1650	400	247.0370	460	267.4912	520	287.5277	580	307.1464
221	183.5331	281	205.2336	341	226.5163	401	247.3813	461	267.8285	521	287.8581	581	307.4698
222	183.8982	282	205.5917	342	226.8675	402	247.7255	462	268.1658	522	288.1884	582	307.7932
223	184.2632	283	205.9497	343	227.2185	403	248.0696	463	268.5029	523	288.5185	583	308.1164
224	184.6280	284	206.3076	344	227.5695	404	248.4136	464	268.8399	524	288.8486	584	308.4395
225	184.9928	285	206.6654	345	227.9203	405	248.7574	465	269.1768	525	289.1785	585	308.7624
226	185.3574	286	207.0231	346	228.2710	406	249.1012	466	269.5136	526	289.5083	586	309.0853
227	185.7219	287	207.3806	347	228.6216	407	249.4448	467	269.8503	527	289.8380	587	309.4081
228	186.0863	288	207.7381	348	228.9721	408	249.7883	468	270.1868	528	290.1676	588	309.7307
229	186.4506	289	208.0954	349	229.3224	409	250.1317	469	270.5233	529	290.4971	589	310.0532
230	186.8148	290	208.4526	350	229.6727	410	250.4750	470	270.8596	530	290.8265	590	310.3756
231	187.1788	291	208.8097	351	230.0228	411	250.8182	471	271.1958	531	291.1557	591	310.6979
232	187.5428	292	209.1667	352	230.3728	412	251.1612	472	271.5319	532	291.4848	592	311.0200
233	187.9066	293	209.5235	353	230.7227	413	251.5042	473	271.8679	533	291.8138	593	311.3421
234	188.2703	294	209.8803	354	231.0725	414	251.8470	474	272.2037	534	292.1427	594	311.6640
35	188.6339	295	210.2369	355	231.4222	415	252.1897	475	272.5395	535	292.4715	595	311.9858
236	188.9974	296	210.5934	356	231.7717	416	252.5323	476	272.8751	536	292.8002	596	312.3075
237	189.3607	297	210.9498	357	232.1211	417	252.8747	477	273.2106	537	293.1287	597	312.6291
238	189.7240	298	211.3061	358	232.4705	418	253.2171	478	273.5460	538	293.4571	598	312.9506
239	190.0871	299	211.6622	359	232.8197	419	253.5593	479	273.8813	539	293.7855	599	313.2719
240	190.4501	300	212.0183	360	233.1687	420	253.9014	480	274.2164	540	294.1137	600	313.5932
241	190.8130	301	212.3742	361	233.5177	421	254.2435	481	274.5515	541	294.4417	601	313.9143
242	191.1758	302	212.7300	362	233.8666	422	254.5853	482	274.8864	542	294.7697	602	314.2353
243	191.5384	303	213.0857	363	234.2153	423	254.9271	483	275.2212	543	295.0976	603	314.5562
244	191.9010	304	213.4413	364	234.5639	424	255.2688	484	275.5559	544	295.4253	604	314.8769
245	192.2634	305	213.7968	365	234.9124	425	255.6103	485	275.8905	545	295.7529	605	315.1976
246	192.6257	306	214.1521	366	235.2608	426	255.9517	486	276.2249	546	296.0804	606	315.5181
247	192.9879	307	214.5074	367	235.6091	427	256.2931	487	276.5593	547	296.4078	607	315.8386
248	193.3500	308	214.8625	368	235.9572	428	256.6342	488	276.8935	548	296.7351	608	316.1589
249	193.7120	309	215.2175	369	236.3053	429	256.9753	489	277.2276	549	297.0622	609	316.4791
250	194.0738	310	215.5724	370	236.6532	430	257.3163	490	277.5616	550	297.3893	610	316.7991
251	194.4355	311	215.9271	371	237.0010	431	257.6571	491	277.8955	551	297.7162	611	317.1191
252	194.7972	312	216.2818	372	237.3487	432	57.9979	492	278.2293	552	298.0430	612	317.4389
253	195.1587	313	216.6363	373	237.6963	433	258.3385	493	278.5629	553	298.3697	613	317.7587
254	195.5200	314	216.9908	374	238.0437	434	258.6790	494	278.8965	554	298.6962	614	318.0783
255	195.8813	315	217.3451	375	238.3911	435	259.0194	495	279.2299	555	299.0227	615	318.3978
256	196.2425	316	217.6993	376	238.7383	436	259.3596	496	279.5632	556	299.3490	616	318.7171
257	196.6035	317	218.0533	377	239.0854	437	259.6998	497	279.8964	557	299.6753	617	319.0364
258	196.9644	318	218.4073	378	239.4324	438	260.0398	498	280.2295	558	300.0014	618	319.3556
259	197.3252	319	218.7611	379	239.7793	439	260.3797	499	280.5624	559	300.3274	619	319.6746
260	197.6859	320	219.1149	380	240.1261	440	260.7195	500	280.8953	560	300.6532	620	319.9935
261	198.0465	321	219.4685	381	240.4727	441	261.0592	501	281.2280	561	300.9790	621	320.3123
262	198.4069	322	219.8220	382	240.8192	442	261.3988	502	281.5606	562	301.3046	622	320.6310
263	198.7673	323	220.1753	383	241.1657	443	261.7382	503	281.8931	563	301.6302	623	320.9495
264	199.1275	324	220.5286	384	241.5120	444	262.0776	504	282.2254	564	301.9556	624	321.2680
265	199.4876	325	220.8817	385	241.8581	445	262.4168	505	282.5577	565	302.2809	625	321.5863
266	199.8476	326	221.2348	386	242.2042	446	262.7559	506	282.8898	566	302.6061	626	321.9045
267	200.2075	327	221.5877	387	242.5502	447	263.0949	507	283.2219	567	302.9311	627	322.2226
268	200.5672	328	221.9405	388	242.8960	448	263.4338	508	283.5538	568	303.2561	628	322.5406
269	200.9269	329	222.2932	389	243.2417	449	263.7725	509	283.8856	569	303.5809	629	322.8585
270	201.2864	330	222.6457	390	243.5873	450	264.1112	510	284.2173	570	303.9056	630	323.1763
271	201.6458	331	222.982	391	243.9328	451	264.4497	511	284.5488	571	304.2302		

Appendix D. Pipework Compression Fittings

Important Notice

Different manufacturers' component parts are NOT interchangeable

The information provided here constitutes extracts from the Swagelok Pocket Installation Manual MS-13-59, the Parker Instrumentation A-LOK Tube Fittings Catalogue 4233, the Walterscheid Catalogue and the Hoke Gyrolok® Catalogue 79002

D.1 Swagelok® Tube Fittings

Pocket Installation Manual for Tube Fittings



Swagelok tube fittings are made to exacting tolerances. Without such close tolerances, the interaction of the nut, two ferrules, and body would not be successful.

If good quality tubing is used with *Swagelok* tube fittings, and installation instructions are followed, successful connections will result.

D.1.1 Installation Instructions

***Swagelok* tube fittings 1/4 to 1 in. and 6 to 25 mm**

Swagelok tube fittings come to you completely assembled, finger-tight and ready for immediate use.

Disassembly before use is unnecessary and can result in dirt or foreign material getting into the fitting which can interfere with sealing.

***Swagelok* tube fittings are installed in three easy steps:**

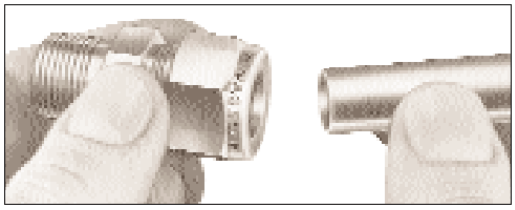

Step 1

Simply insert the tubing into the *Swagelok* tube fitting.

Make sure that the tubing rests firmly on the shoulder of the fitting and that the nut is finger-tight.



Step 2

Before tightening the *Swagelok* nut, scribe the nut at the 6 o'clock position.

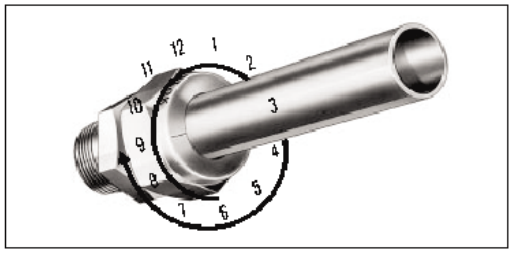

Step 3

While holding the fitting body steady with a backup wrench, tighten the nut 1 1/4 turns.[1] Watch the scribe mark, make one complete revolution, and continue to the 9 o'clock position.

[1] For 1/16, 1/8 and 3/16 in.; 2, 3, and 4 mm size tube fittings, tighten 3/4 turn from finger-tight.

By scribing the nut at the 6 o'clock position, there will be no doubt as to the starting position. When the nut is tightened 1 1/4 turns to the 9 o'clock position, you can easily see that the fitting has been properly tightened.

Swagelok gap inspection gauges assure the installer or inspector that a fitting has been sufficiently tightened.

D.1.2 Gap Inspection Gauges

Swagelok gap inspection gages are designed to assure the installer or inspector that a fitting has been sufficiently pulled up into the fitting body on initial installation. They are particularly applicable to systems where fittings are installed in difficult or inaccessible

locations or systems where insufficient pull-up could cause potentially dangerous or expensive consequences.

Consistent gaugeability ensures added safety and reliability. It is a *Swagelok* tube fitting feature that allows easy inspection for sufficient pull-up, before a system is pressurised.

Most *Swagelok* tube fittings are gaugeable. Gap inspection gauges are accurate only when all components are *Swagelok* components.

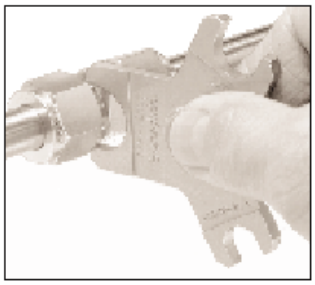

Gap inspection gauge **does not fit** between nut and body hex. **Fitting is sufficiently tightened.**

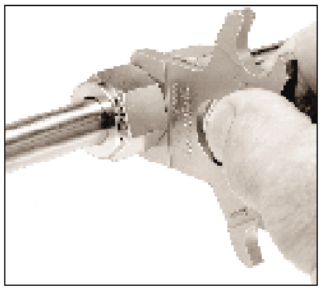

Gap inspection gage **fits** between nut and body hex. **Additional tightening is required.**



for multiple sizes

This gauge works on five sizes of *Swagelok* tube fittings: 1/4, 3/8, and 1/2 in.; 6 and 12 mm.

Ordering Number: MS-IG-468



for multiple metric sizes

This gauge works on four metric sizes of *Swagelok* tube fittings: 6, 8, 10, and 12 mm.

Ordering Number: MS-IG-612M



for individual sizes.

Tube Size		Fitting Series		Inspection Gauge Ordering No.
Inches	mm	Fractional	Metric	
1/16	–	100	–	MS-IG-100
1/8	2 3	200	-2M0 -3M0	MS-IG-200
3/16	4	300	-4M0	MS-IG-300
1/4	6	400	-6M0	MS-IG-400
5/16	8	500	-8M0	MS-IG-500
3/8	–	600	–	MS-IG-600
–	10	–	-10M0	MS-IG-10M0
1/2	12	810	-12M0	MS-IG-810
5/8	14 15 16	1010	-14M0 -15M0 -16M0	MS-IG-1010
3/4	18	1210	-18M0	MS-IG-1210
7/8	20 22	1410	-20M0 -22M0	MS-IG-1410
1	25	1610	-25M0	MS-IG-1610

D.1.3 Retightening Instructions

Connections can be disconnected and retightened many times.

The same reliable leak-proof seal can be obtained every time the connection is remade.

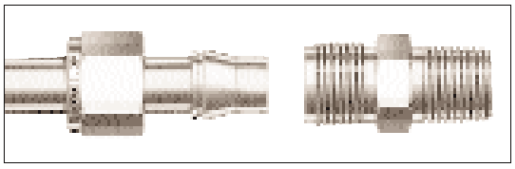

1. Fitting is shown in the disconnected position.

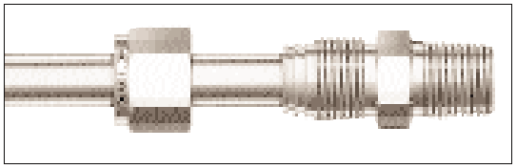

2. Insert tubing with preswaged ferrules into fitting body until front ferrule seats.

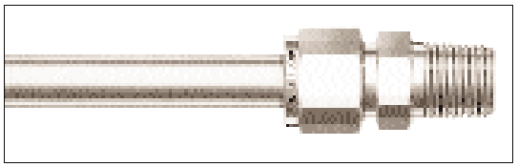

3. Tighten nut by hand. Rotate nut to the original position with a wrench. *An increase in resistance will be encountered at the original position*. Then tighten slightly with the wrench. Smaller tube sizes will take less tightening to reach the original position, while larger tube sizes will require more tightening. The wall thickness will also have an effect on tightening.

The Swagelok gap inspection gauge is not intended to be used when the fitting is retightened.

D.1.3.1. Preswaging Instructions

When installing Swagelok tube fittings in cramped quarters or where ladders must be used, it may be advantageous to use a preswaging tool. It allows the preswaging of ferrules onto the tube in a safer or more open area. After using the tool, simply follow the retightening instructions.

Oversized or very soft tubing may occasionally stick in the tool after pull-up. If this happens, remove the tube by gently rocking the tube back and forth. DO NOT TURN the tube with pliers or other tools as this may damage sealing surfaces.

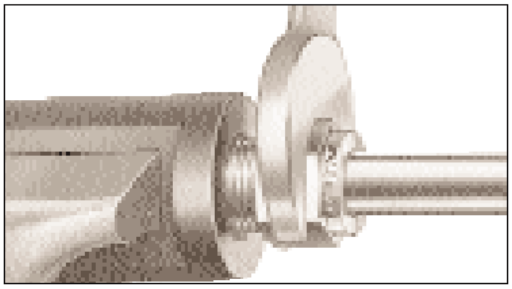

4. Assemble Swagelok nut and ferrules to preswaging tool. Insert tubing. Make sure the tubing rests firmly on the shoulder of the tool and the nut is finger-tight. Tighten nut 1 1/4 turns.[(1)]

[(1)]For 1/16, 1/8 and 3/16 in.; 2, 3, and 4 mm size tube fittings, tighten 3/4 turn from finger-tight.

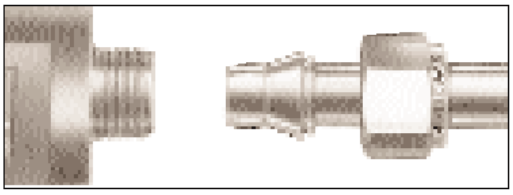

5. Loosen the nut and remove the tubing with preswaged ferrules from the preswaging tool.

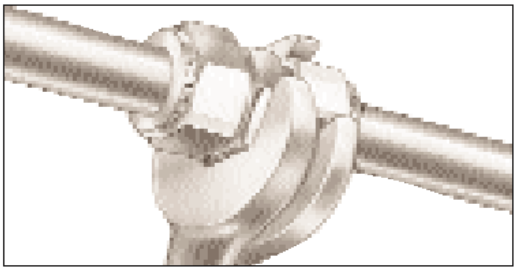

6. The connection can now be made by following the Retightening Instructions shown on page 6.

Although a preswaging tool can be used many times, it does have a finite life. After frequent use, ask your Swagelok representative to have it checked.

D.1.4 Installation Instructions

D.1.4.1. Port Connector

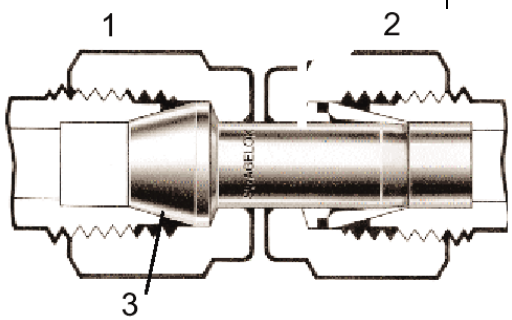

1. Port 1
2. Port 2
3. Machined ferrule.

1. Remove nut and ferrules from the first of the two Swagelok ports to be connected.
2. Slip nut only (no ferrules) over the **machined ferrule** end of port connector.
3. Insert port connector into Swagelok **Port 1** and finger tighten the nut.
4. Tighten with wrench 1/4 turn only. (For 1/16, 1/8, and 3/16 in.; 2, 3, and 4 mm size tube fittings, tighten 1/8 turn from finger-tight.) Subsequent connections are made from the finger-tight position by slightly tightening the nut with a wrench.
5. Insert other end of port connector into Swagelok **Port 2** until bottomed, and tighten nut 1 1/4 turns from finger-tight using normal Swagelok nut and ferrules. For 1/16, 1/8, and 3/16 in.; 2, 3, and 4 mm tube fittings, tighten 3/4 turn from finger-tight.

D.1.4.2. Plug



Tighten plug with wrench 1/4 turn from finger-tight position. For 1/16, 1/8, and 3/16 in.; 2, 3, and 4 mm tube fittings, tighten 1/8 turn from finger-tight. For over 1 in. and 25 mm, tighten plug with wrench 1/4 turn from finger-tight.

Make subsequent connections by slightly tightening with wrench after snugging the nut by hand.

D.1.4.3. Swagelok To AN Adapter

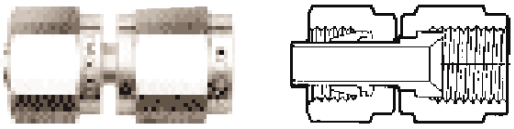

Tighten the Swagelok nut by hand. Rotate the nut with a wrench until an increase in resistance is encountered. Then tighten slightly with the wrench. For nylon fittings, see the Assembly Instructions card shipped with each fitting.

D.1.4.4. SAE/MS Straight Thread Positionable Elbows And Tees

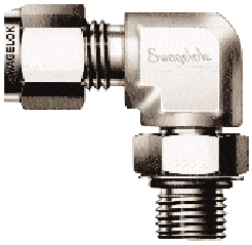

1. Lubricate O-ring with a lubricant compatible with the system fluid, environment, and O-ring material.[1] (Standard O-ring material is fluorocarbon FKM. Other O-ring materials are also available, upon request.)

[1] O-rings are coated with a thin film of silicone based lubricant.

1. Turn the fitting into the straight thread boss until the metal back-up washer contacts the face of the boss.
2. Position the fitting by backing it out **(not more than one turn counter clockwise)** until the Swagelok tube fitting end is oriented in the proper direction.
3. Hold the wrench pad with a backup wrench and tighten the locknut until the washer is against the face of the boss.

NOTE: SAE/MS positionable elbows and tees are compatible with J1926, MS16142, or JIC female straight thread O-ring bosses.

D.1.5 Swagelok Adaptors

Swagelok adapters, reducers, and port connectors are to be used ONLY in Swagelok tube fittings. Use in fittings made by other manufacturers may result in failure.

D.1.5.1. Solve Alignment Problems

When installing pipe elbows or tees, it is often difficult to align the fitting with the desired run.

When pipe threads are tightly engaged, an angle fitting is often pointing in the wrong direction for the tubing run. Loosening the pipe connection means leakage at the pipe thread.

By using Swagelok tube adapters in conjunction with union elbows or tees, these difficulties can be totally avoided.

Adapters can save money while providing greater in-system versatility.



D.1.5.2. Swagelok Adaptors Example

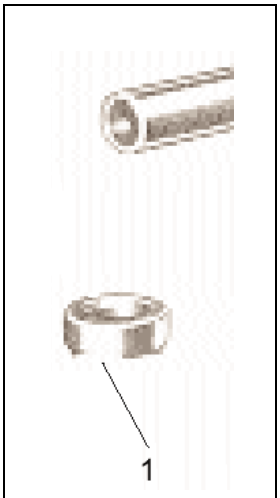

1. Female pipe port.

1. Required installation is to connect tubing in direction shown, to a female port.

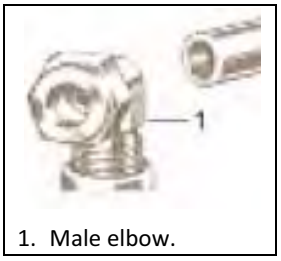

1. Male elbow.

2. With pipe connection tight, the male elbow is pointing in the wrong direction for desired tubing run.

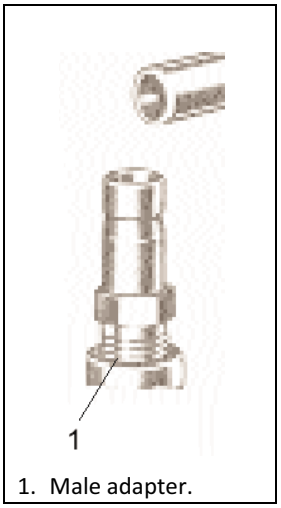

1. Male adapter.

3. To correct this situation, tighten pipe thread of male adapter into female port.



1. Union elbow.
2. Male adapter.

4. Connect union elbow to adapter by tightening Swagelok connection with wrench while holding elbow pointing in desired direction. Then, insert tubing into the other end of the Swagelok union elbow and connect tubing.

D.1.5.3. Installation of Swagelok Adaptors

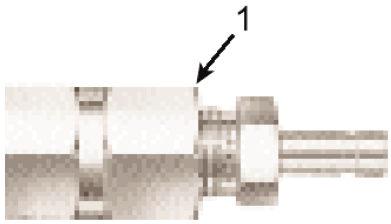

1. Female pipe port on existing equipment.

Step 1. To facilitate the installation of adapter fittings, it is advantageous to first connect the end opposite the tube adapter end. This will eliminate alignment problems which are often encountered with fittings such as male run or branch tees

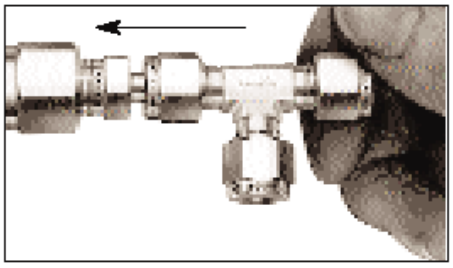

Step 2. Place the Swagelok tube fitting over the adapter fitting. Make sure that the adapter fitting rests firmly on the shoulder of the Swagelok fitting and that the nut is finger-tight.

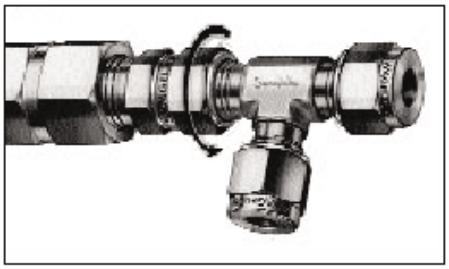

Step 3. Before tightening the Swagelok nut, scribe the nut at the 6 o'clock position. Now, while holding the Swagelok fitting body steady with a backup wrench, tighten the nut 1 1/4 turns [(1)]. Watch the scribe mark, make one complete revolution, and continue to the 9 o'clock position.

[(1)]For 1/16, 1/8, and 3/16 in.; 2, 3, and 4 mm size tube fittings, tighten 3/4 turn from finger-tight.

D.1.6 How To Use Swagelok Adaptors And Reducers

(1 1/4, 1 1/2, and 2 in.; 28, 30, 32, and 38 mm)

These adapters and reducers are furnished with nuts and preswaged ferrules. This feature adds the benefits of increased reliability and safety to the already versatile adapter line.

For male and female elbows, or connections to SAE/MS straight thread ports, use a union elbow with male, female, or straight thread adapter as shown.



Adapters can also be used to make male run, male branch, female run, and female branch tees when used in conjunction with union tees. Benefits are smaller and more flexible inventories plus an improved ability to orient elbows and tees to the proper direction without thread leakage.

D.1.6.1. Installation Instructions

(1 1/4, 1 1/2, and 2 in.; 28, 30, 32, and 38 mm)

To install reducers with Swagelok nuts and preswaged ferrules, tighten with wrench 1/2 turn after snugging nut by hand.

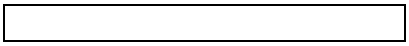

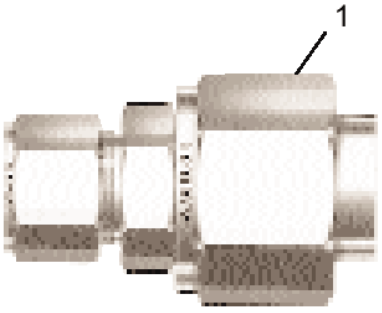

1. Nut and preswaged ferrules.

D.1.7 Tubing Installation

Properly selected tubing combined with the quality of Swagelok tube fittings will give you leak free systems. Contact your Swagelok representative for more information on Swagelok tubing.

When installing fittings near tube bends, there must be a sufficient length of straight tubing to allow the tube to be bottomed in the Swagelok tube fitting.

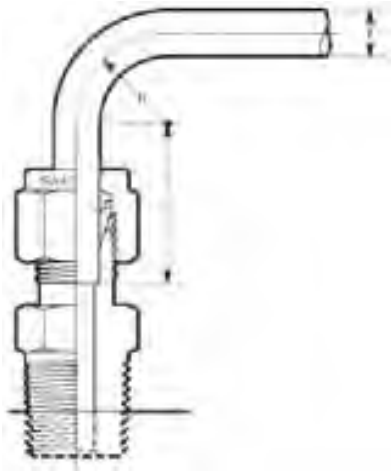

R - Radius of tubing bend as required or minimum allowed for specified wall thickness and tube size as recommended by tubing manufacturer.

L - Straight tube length required from end of tube to beginning of bend.

T - Tube outside diameter

T (in.)	1/16	1/8	3/16	1/4	5/16	3/8	1/2	5/8	3/4	7/8	1	1 1/4	1 1/2	2
L (in.)	1/2	23/32	3/4	13/16	7/8	15/16	13/16	1 1/4	1 1/4	1 5/16	1 1/2	2	2 13/32	3 1/4
T (mm)	3	6	8	10	12	14	15	16	18	20	22	25	28	30	32	38
L (mm)	19	21	23	25	31	32	32	32	32	34	34	40	40	52	54	63

D.1.8 Interchangeability

Manufacturers of competitive tube fittings often claim that their components are interchangeable with Swagelok tube fitting components.

We believe that interchanging and intermixing tube fitting components of different designs, or made by different manufacturers, can result in leaks and tube slippage in a percentage of cases. We also believe this practice can be dangerous.

Leak-tight seals that will withstand high pressure, vibration, vacuums, and temperature changes depend upon close tolerances and consistent, exacting quality control in conjunction with good principles.

The full value we build into Swagelok tube fittings is lost when components from other manufacturers are interchanged or intermixed with ours. We believe that ***any*** manufacturer's fitting performs best when only that manufacturer's components are used in its fittings.

We do not believe that a tube fitting made up by interchanging and intermixing components of other manufacturers with Swagelok tube fitting components will perform to the high standards of an all Swagelok tube fitting.

D.1.8.1. Safe Component Selection

When selecting a component, the total system design must be considered to ensure safe, trouble-free performance. Component function, material compatibility, adequate ratings, proper installation, operation, and maintenance are the responsibilities of the system designer and user.

D.1.8.2. Caution

Do not mix or interchange parts with those of other manufacturers.

D.1.9 Safety Considerations

- Do not bleed system by loosening fitting nut or fitting plug.
- Do not make up and tighten fittings when system is pressurised.
- Use Swagelok gap inspection gage to assure the installer or inspector that a fitting has been sufficiently tightened.
- Always use proper thread lubricants and sealants on tapered pipe threads.
- Avoid combining or mixing materials or fitting components from various manufacturers – tubing, ferrules, nuts and fitting bodies.
- Never turn fitting body. Instead, hold fitting body and turn nut.
- Never disassemble new or unused fittings.
- Use only long reducers in female Swagelok ports.

Additional tubing considerations:

1. Metal tubing material should be softer than fitting material. For example: stainless steel tubing should not be used with brass fittings.
2. When tubing and fittings are made of the same material, tubing must be fully annealed.
3. Always use an insert with extremely soft or pliable plastic tubing.
4. Extremes of wall thickness should always be checked against fitting manufacturer's suggested minimum and maximum wall thickness limitations.
5. Surface finish is very important to proper sealing. Tubing with any kind of depression, scratch, raised portion, or other surface defect may be difficult to seal, particularly in gas service.

6. Tubing that is oval, that will not easily fit through fitting nuts, ferrules, and bodies, should never be forced into the fitting.

D.2 Parker A-LOK Tube Fittings

A-LOK TUBE FITTINGS



D.2.1 Assembly and Remake Instructions



1. Parker instrument tube fittings are sold completely assembled and ready for immediate use. Simply insert the tube as illustrated until it bottoms in the fitting body. (If the fitting is dis-assembled, note that the small tapered end of the ferrule(s) go into the fitting body).
2. Tighten nut finger tight. Then tighten nut with wrench an additional 1-1/4 turns indicated below. Hold fitting body with a second wrench to prevent body from turning. It is helpful to mark the nut to facilitate counting the number of turns.

INCH SIZE 1 thru 3 (1/16" - 3/16")

METRIC SIZE 2 thru 4 (2-4mm)

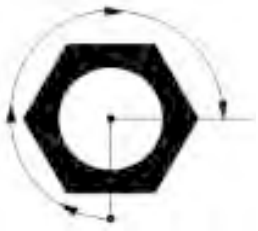

Only 3/4 turn from finger tight is necessary to seal and will result in additional remakes of the fitting.

INCH SIZE 4 thru 16 (1/4" - 1")

METRIC SIZE 6 thru 25 (6-25mm)

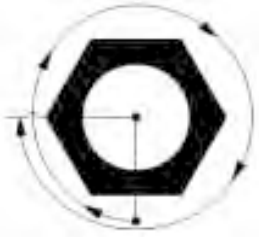

1-1/4 Turns from Finger Tight

For maximum number of remakes, mark the fitting and nut before disassembly. Before retightening, make sure the assembly has been inserted into the fitting until the ferrule seats in the fitting. Retighten the nut by hand. Rotate the nut with a wrench to the original position as indicated by the previous marks lining up. (A noticeable increase in mechanical resistance will be felt indicating the ferrule is being re-sprung into sealing position).



Only after several remakes will it become necessary to advance the nut slightly past the original position. This advance (indicated by B) need only be 10º-20º (less than 1/3 of a hex flat).

For Sizes above 16 (1"), the Parker ICD Hydraulic Pre-setting Tool or Rotary Wrench Tool should be used. Cat. 4290-INST.

D.2.2 Gaugeability Instructions

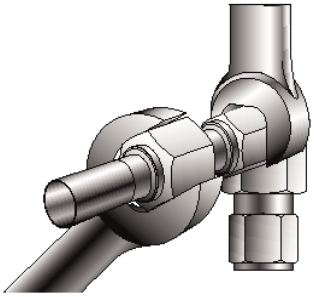

1. From “finger tight” position, wrench 1-1/4 turns for 1/4" to 1" size fittings (6mm to 25mm) (1/16", 1/8", 3/16", 2mm 3mm and 4mm size tube fittings only wrench 3/4 turn from finger tight position). Hold fitting body hex with second wrench to prevent body from turning as you tighten. It is a good idea to mark the nut (scribe or ink) to help you count the turns.

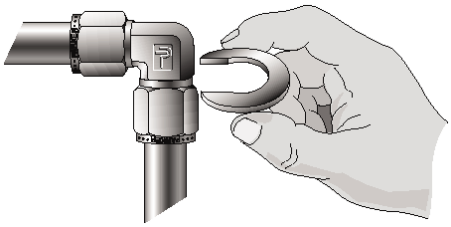

2. Now select the proper size inspection gauge and try to place it, as shown, between the nut and the body hex. If gauge DOES NOT FIT AT ANY POINT between them, you have correctly tightened the nut. If you can slip the gauge into the space, the fitting is not properly made up, and you must repeat the assembly procedure.

D.3 Walterscheid Profile Ring Tube Fittings



D.3.1 Turning Angle Controlled Assembly In Pre-Assembly Adaptor

D.3.1.1. Tube Selection

A tube grade suitable for cold-bending and flaring is to be used. We recommend the use of seamless precision steel, material St 37.4 / St 52.4 to DIN 1630, type NBK-3.1 B. Tolerances of tube outside and inside diameters to DIN 2391, sheet 1-C. Calculated pressures according to DIN 2413.

D.3.1.2. Note

In order to ensure positive assembly, *WALPRO* fittings should always be pre-assembled in an oiled pre-assembly adaptor. For direct assembly, torque controlled assembly or mechanical pre-assembly, which are also possible, please refer to separate assembly instructions.

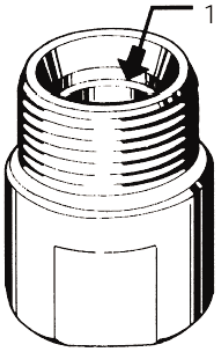

1. Tube abutment.

D.3.1.3. Assembly Instructions

1. Saw Off At Right Angle

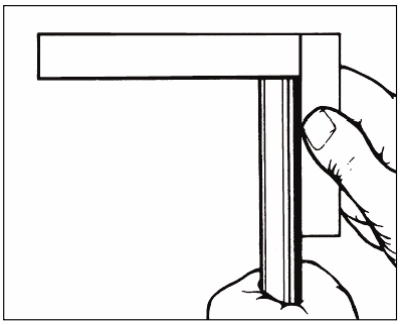

Saw off 10 mm from the parting cut made by the tube manufacturer (delivery-related source of faults). Saw the tube off at rightangles, an angular deviation of 1/2° relative to the tube axis is permissible. Do not use pipe cutters or cutting-off wheels as they cause severe burring and inclined cuts. Use a sawing machine / sawing device.

2. Lightly deburr the tube ends and clean the tube!

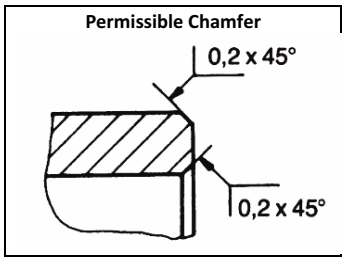

Remove burr and clean inside and out. The clamping and reshaping area must be clean and free of any chips, dirt, grease, oil and paint! Use an environment friendly solvent to remove grease or oil.

3. Place nut and profile ring on tube as shown.

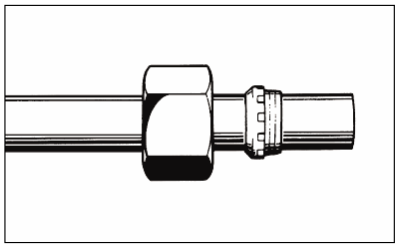

4. Pre-tightening

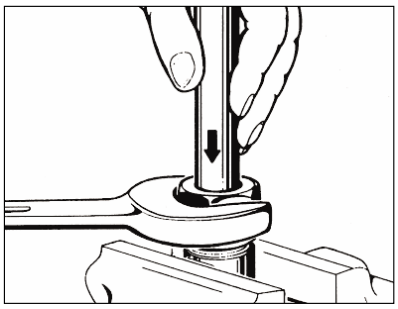

Hold the tube firmly against the abutment in the pre-assembly adapter and tighten nut until the profile ring grips the tube which is felt by a noticeable increase in torque (pressure point).

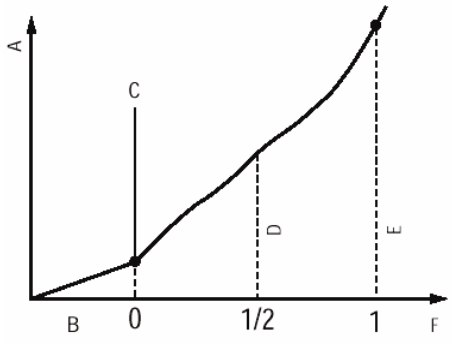

A. Tightening torque.
B. Pre-tightening.
C. Ring on tube.
D. Pre-assembled.
E. Completely assembled.
F. Turns of nut.

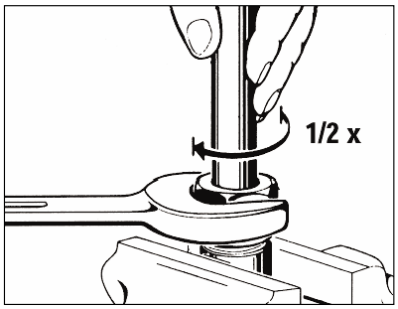

Tighten nut 1/2 a turn beyond the pressure point. **Caution!** Application of deviating number of tightening turns reduces the nominal pressure rating and the life of the fitting which causes leakages or slipping of the tube.

5. Check

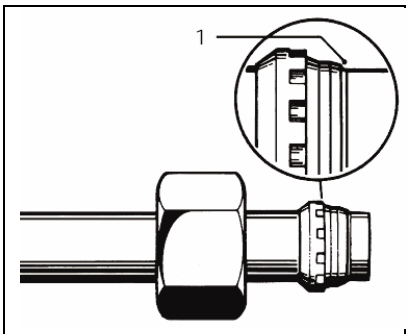

1. Ring of material.

Check penetration of cutting edge. A ring of material must be visible in front of the profile ring's cutting edge. Profile ring may turn on tube, but must not be capable of axial displacement.

6. Final Assembly In The Fitting Body

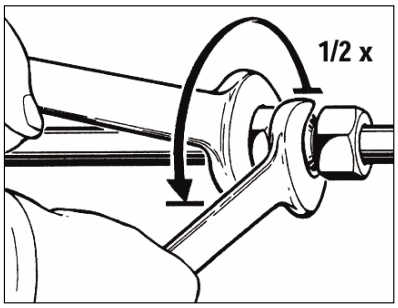

Tighten nut until a noticeable increase in force is required. Tighten nut by 1/2 a turn beyond this point for final assembly. **Important:** Hold fitting body firmly by means of a spanner.

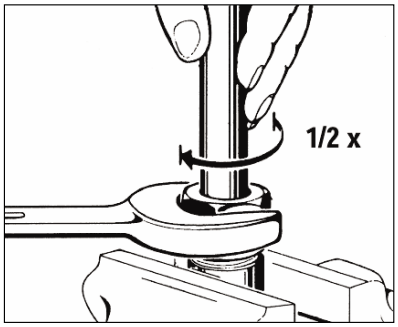

With unfavourable mounting conditions and great tube dimensions, final assembly must be completed in a vice with the fitting body to be subsequently installed. **Caution!** Any deviating number of tightening turns reduces the nominal pressure and the service life of the fitting which causes leakages or slipping of the tube.

7. Re-Assembly

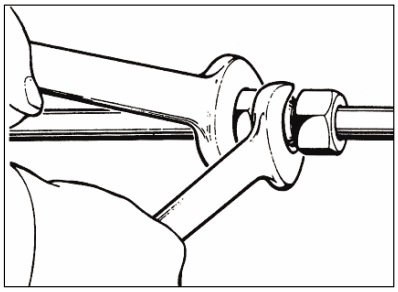

Each time the fitting is disassembled, the nut must be re-tightened firmly using the same torque as required for final assembly.

8. 8. Minimum length of straight tube end for tube bends

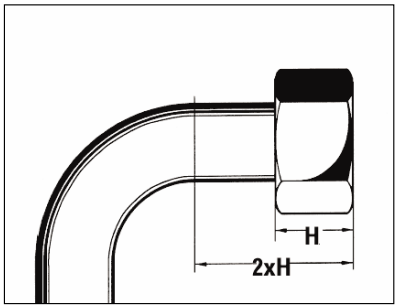

For tube bends, the length of the straight tube end up to the start of the bending radius must be at least twice the nut length.

D.4 Hoke Gyrolok Tube Fittings

D.4.1 *HOKE* Gyrolok Assembly Instructions

Initial Setting Of Ferrules Onto Tubing Or Tube Stub-Ended Fittings

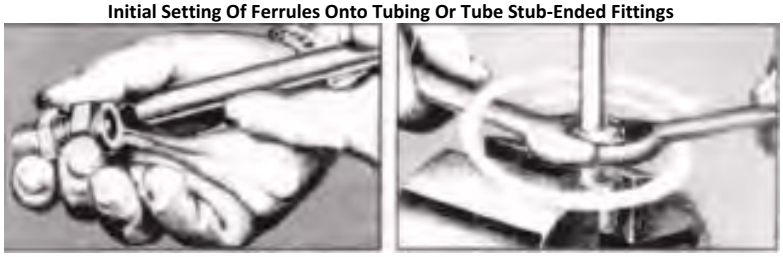

D.4.1.1. Sizes 1”, 25mm And Smaller

D.4.1.2. Manual Assembly

Use the following instructions when initially setting ferrules onto either tubing, or the tube stub end of certain fittings (e.g. adapters, port connectors, and reducers). Note that for tubing sizes above ½”, or 12mm, the use of a presetting tool, either manual or hydraulic, may apply. See further details in the Section titled, 'Presetting Tool Assembly”.

1. Loosen the fitting nut.
2. Firmly insert the tubing into the fitting assembly. Proper assembly requires that the tubing be fully bottomed in the fitting body. Note: Use of the *HOKE* Gyrogage, explained below, will allow the assembler to confirm proper tube insertion.
3. Establish a consistent starting point for wrench tightening.

For sizes under ½”, finger tightening of the fitting nut is sufficient.

For sizes ½” and above, tighten the fitting nut until the tubing will not rotate. If it is not possible to determine tubing rotation then, while supporting the body with a backup wrench, use a wrench to tighten the fitting nut an additional ¼-turn past finger-tight.

1. Mark the fitting body and nut at the 12:00 position with a readily visible marking.
2. While supporting the body with a backup wrench, tighten the nut with a wrench 1¼-turns by going completely around past the 12:00 position to the 3:00 position. Note that if a Gyrogage is used, the mark made on the tubing will become visible at the back of the nut when the nut has been sufficiently tightened.

D.4.1.3. Presetting Tool Assembly

Due to the inherent strength of large diameter heavy wall tubing, *HOKE* recommends the use of a presetting tool, either manual or hydraulic, for all installations involving tubing sizes from 5/8” or 16mm and above, regardless of application. When the tubing wall thickness being utilized in sizes less than 0.065” or 2.0mm, a manual presetting tool is sufficient. When the wall thickness is 0.065” or 2.0mm and greater, the use of a hydraulic presetting tool is specifically required. Each Hydraulic Pre-setting Tool is supplied with its own set of instruction.

The use of manual presetting tools is also suggested for smaller size fittings and tubing when the actual installation is in a hard-to-reach location, making it difficult to count turns. Use manual presetting tools by following the instructions for initially setting ferrules. By presetting the ferrules in the presetting tool, installation in place simply requires following Gyrolok remake instructions.

D.4.1.4. Remaking a Fitting End, or Assembling a Fitting Body to Tubing with Preset-Ferrules

1. Firmly insert the end with the previously set ferrules into the fitting body and tighten the nut to a finger tight condition.
2. While supporting the body with a backup wrench, tighten the nut with a wrench until a sharp rise in torque is felt, then simply snug tight.

D.4.1.5. Sizes 1¼", 28mm and Larger

A Hydraulic Pre-setting Tool must be used when assembling 1¼", 1½", 2", 28mm, 30mm, 32mm & 38mm Gyrolok Tube Fittings

1. A Hydraulic Pre-setting Tool is designed to set the ferrules on the tubing prior to installation into a fitting body. Each Hydraulic Pre-setting Tool is supplied with its own set of instructions.
2. Prior to installation into the fitting body, lubricate the back surface of the rear ferrule and threads on the nut with the lubricant supplied.
3. Using the lubricant supplied, periodically lubricate the cone angle and threads of the Pre-setting Tool die-set (prior to first fitting make-up and approximately every fifth fitting thereafter).
4. Insert tubing with preset ferrules into Gyrolok body, hand tighten the nut, while supporting the body with a backup wrench, further tighten the nut with a wrench until a sharp rise in torque is felt.

D.4.1.6. Remake Instructions

1. Firmly insert the end with the previously set ferrules into the fitting body and tighten the nut to a finger tight condition.
2. While supporting the body with a backup wrench, tighten the nut with a wrench until a sharp rise in torque is felt, then simply snug tight.

When initially assembling the pre-set ferrule end of over 1", 25mm Gyrolok adapters, follow the remake instructions listed above.

D.4.1.7. All Sizes

D.4.1.8. Installations That Do Not Involve Setting of Ferrules

Assembly instructions differ when installing fitting ends that do not involve setting ferrules, such as a plug (P), or the machined ferrule end of a port connector (PC), as well as for threaded ends such as NPT or SAE, for which appropriate standards should be used.

D.4.1.9. When assembling a Gyrolok plug onto a Gyrolok body:

1. Remove nut and ferrules from fitting body.
2. Place plug assembly onto fitting body. Tighten plug nut to a hand-tight condition.
3. While supporting fitting body with a backup wrench, tighten plug nut with a wrench until a sharp rise in torque is felt, (approximately ¼-turn on initial makeup, less on reconnections) then simply snug.

D.4.1.10. When initially assembling the machined ferrule end of a Gyrolok port connector:

1. Remove nut and ferrules from a fitting body.
2. Firmly insert machined ferrule end of port connector into fitting body.

3. Slide nut over tube stub end of port connector and then over machined ferrule. Hand-thread onto fitting body.
4. While supporting fitting body with a backup wrench, tighten nut with a wrench until a sharp rise in torque is felt (approximately ¼-turn on initial makeup, less on reconnections), then simply snug.

D.4.1.11. *HOKE* Gyrogage Assembly and Inspection Tool

Use the *HOKE* Gyrogage to perform step-by-step inspections during the initial assembly process. Each Gyrogage is supplied with instructions, allowing the user to:

1. Verify all components are present.
2. Ensure proper insertion of the tubing into the fitting.
3. Confirm sufficient tightening of the fitting nut.

D.4.2 Pre-Setting Tool (PST)





1. Place PST in vice.
2. Loosely assemble nut and ferrules to PSI. Use *HOKE* Gyrolok Safety Changer Nut & Ferrule Sets.
3. Follow standard *HOKE* Gyrolok assembly instructions to set ferrules onto tubing, see above.
4. Loosen nut and remove tubing with pre-set ferrules and nut.
5. With pre-set ferrules and nut in permanent location, reassemble tubing by following *HOKE* Gyrolok reassembly instructions detailed above.

Note: Threads of pre-setting tools should be lubricated the very first time and relubricated every tenth time thereafter.

D.4.3 Hydraulic Pre-Setting Tool

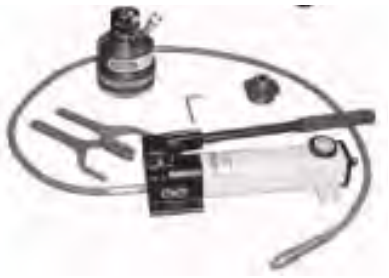

Larger tube fittings often require more effort to assemble properly than can be consistently achieved using hand wrenches. *HOKE* offers a portable Hydraulic Pre-setting Tool to make the assembly of larger fittings.

Using the portable Hydraulic Pre-setting Tool, the Gyrolok nut and ferrule system is initially set onto the tubing. The pre-set fitting and tube assembly is then easily installed by following the Gyrolok reassembly instructions.

D.4.3.1. How It Works



Gyrolok nut and ferrule system components are assembled onto the Hydraulic Pre-Setting Tool and the hand pump is operated until indicator arm releases.



Pre-set tube assembly is ready for installation using standard Gyrolok remake instructions

D.4.4 *HOKE* Gyrolok Safety Instructions

1. Make sure the system is not pressurized when tightening or loosening a fitting or valve connection.
2. When relieving or bleeding system pressure, do not loosen the *HOKE* Gyrolok nut or any product component.
3. Do not exceed temperature specifications.
4. Do not exceed maximum allowable working pressure/temperature combinations for tubing when using *HOKE* Gyrolok. Check the *HOKE* Tubing Data Charts for specific information. Note that if no pressure is identified for a given size and wall thickness of tubing, that tubing is not suitable for use with tube fittings.

5. When the application involves use of a toxic or hazardous fluid, exercise extra caution during operation and maintenance.
6. When assembling new, unused *HOKE* Gyrolok tube fitting ends, loosen the *HOKE* Gyrolok nut before inserting the tube to allow full insertion of the tube into the base of the body bore.
7. Always use tubing that is compatible with the fitting or valve material. Tubing appropriate for use with *HOKE* Gyrolok fittings is described in the *HOKE* Tubing Data Charts (e.g. use 316 Stainless Steel fittings with 316 Stainless Steel tubing).
8. Always leave a length of straight tube between the tube bend and the fitting. A tube bent too close to the fitting connection may be a source of leakage.
9. During assembly of the *HOKE* Gyrolok tube end, always hold the fitting or valve body with one wrench while separately wrench-tightening the *HOKE* Gyrolok nut. Follow the same precaution when disassembling.
10. Always use a *HOKE* Tube Insert when assembling a *HOKE* Gyrolok Fitting to soft, pliable plastic tubing.
11. Always use proper thread lubricants or sealants on tapered pipe threads. Note that thread sealants may have different temperature ratings than the basic fitting.
12. NPT threads should be torqued in accordance with an industry standard, such as Underwriter's Laboratory UL842. Note that previously assembled threads may require additional tightening.
13. When installing an NPT ended valve, hold the valve body near the connection with one wrench, while separately wrench-tightening the mating pipe. Turn the pipe, not the valve. Follow the same precaution when disconnecting.
14. Do not hold the valve handle when tightening an end connection.

Notes

BRUSH GROUP HQ (GB)
NOTTINGHAM ROAD
LOUGHBOROUGH
LEICESTERSHIRE,
LE11 1EX UNITED KINGDOM
T +44 (0) 1509 611511
E SALESUK@BRUSH.EU

BRUSH HMA B.V (NL)
PO BOX 3007
2980 DA
RIDDERKERK, THE NETHERLANDS
T +31 (0) 180 445500
E SALESNL@BRUSH.EU

BRUSH SEM S.R.O(CZ)
TŘ. EDVARDA BENEŠE 39/564
301 00 PLZEŇ
CZECH REPUBLIC
T +420 378 210 111
E SALESCZ@BRUSH.EU

BRUSH (US)
15110 NORTHWEST FREEWAY,
SUITE 150, HOUSTON, TEXAS. 77040.
UNITED STATES OF AMERICA.
T +1 281 580 1314
E SALESUS@BRUSH.EU

BRUSH GMS (US)
601 BRADDOCK AVE,
TURTLE CREEK, PA,
15145, USA
T +1 412 829 7500
E SALESUS@BRUSH.EU

BRUSH (AE)
PO BOX 390815
DUBAI
UNITED ARAB EMIRATES
T +971 4362 6391
E PETER.BROWN@BRUSH.EU

BRUSH (IN)
SPECTRUM TECHNOLOGIES
801A, A WING,
BSEL TECH PARK,
SECTOR-30A, VASHI,
NAVI MUMBAI - 400705, INDIA.
T + 91 22 27810091/92
E SALES@SOOPL.IN

BRUSH (KR)
ENERTOPIA / AWONS
1203 NONHYEON-ROYAL PALACE
249-6 NONHYEON-DONG GANGNAM-GU
135-010 SEOUL, KOREA
T +65 6848 2146
E PHY@ENERTOPIA.FR

BRUSH JAPAN KK (JP)
1139 THE SOHO
2-7-4, AOMI
KOUTOU KU, TOKYO
135-0064, JAPAN
T +81 3 6380 7091
E SALESJP@BRUSH.EU

BRUSH (SG)
TGM GLOBAL PTE LTD
BLOCK 3026 UBI ROAD 1
#03-162,
SINGAPORE 408719.
T +65 6848 2146
E SALES@GLOBAL-TGM.COM

AFTERMARKET ENQUIRIES

Region	Office Hours	Emergency 24/7	Training Courses	Email
Americas	+1 281 580 1314	+1 281 639 1375	+1 281 580 1314	serviceus@brush.eu
Asia	+44 7985 417891	+44 844 3326527	+44 7985 417891	servicejp@brush.eu
Middle East	+971 5010 12795	+44 844 3326527	+971 5010 12795	serviceme@brush.eu
UK	+44 1509 611511	+44 844 3326527	+44 1509 612219	serviceuk@brush.eu
Central Europe	+31 180 445500	+31 180 445501	+31 180 445500	servicenl@brush.eu
Eastern Europe	+420 378 210717	+420 739 586812	+420 378 210717	servicecz@brush.eu

This publication is issued to provide outline information only which (unless agreed by the company in writing) may not be used, applied or reproduced for any purpose or form part of any order or contract or be regarded as a representation relating to products or services concerned. The company reserves the right to alter without notice the specification, design, price or conditions of supply of any product or service.

BRUSH and the BRUSH logo are copyright protected trademarks. All other company and product names are acknowledged as being the trademarks or registered trademarks of their respective companies.

THIS DOCUMENT AND ITS CONTENTS ARE PROVIDED "AS IS", WITH NO REPRESENTATIONS OR WARRANTIES OF ANY KIND, WHETHER EXPRESS OR IMPLIED, INCLUDING BUT NOT LIMITED TO WARRANTIES OF DESIGN, MERCHANTABILITY, OR FITNESS FOR A PARTICULAR PURPOSE. ALL OTHER LIABILITY ARISING FROM RELIANCE UPON ANY INFORMATION CONTAINED HEREIN IS EXPRESSLY DISCLAIMED.

Printed in the UK

www.brush.eu
www.brushparts.eu