BEFORE THE PUBLIC UTILITIES COMMISSION OF NEVADA

Joint Application of Nevada Power Company d/b/a NV Energy and Sierra Pacific Power Company d/b/a NV Energy for approval of their 2027-2046 integrated resource plan, 2027-2029 Action Plan and 2027-2029 Energy Supply Plan.	Docket No. 26-05___

VOLUME 8 OF 41

NARRATIVE SUPPLY PLAN

DESCRIPTION	PAGE NUMBER
Narrative- Supply Plan Part 1(Redacted)	2

NARRATIVE

SUPPLY PLAN PART 1

NEVADA POWER COMPANY
SIERRA PACIFIC POWER COMPANY

2026 JOINT TRIENNIAL INTEGRATED RESOURCE PLAN

SUPPLY PLAN

Table of Contents

SECTION 1. INTRODUCTION 1
SECTION 2. SUPPLY PLAN 5
A. GENERATION 5
1. Existing Generation 6
2. Other Generation Assets 9
3. Status of Previously Approved Generation Projects 10
4. New Generation Projects 14
5. Environmental Regulations Impacts 30
B. LONG-TERM PURCHASE POWER AGREEMENTS 36
1. Renewable PPA's 39
2. Non-Renewable PPA's 39
3. Renewable and Non-Renewable Sales Agreements 39
C. FUEL SUPPLY 41
1. Current Physical Gas Supply and Proposed Pipeline Expansion. 41
2. Physical Gas Procurement 48
3. Emergency Supplies 49
D. RENEWABLES 51
A. 2024 All Source Request for Proposal 52
B. Company-Owned Renewables 55
C. Power Purchase Agreements 55
D. Descriptions of PPA Projects 61
E. Renewable and Storage Candidate Resource Pricing Outlook 142
F. Named Placeholders……..146
G. Renewable Energy Planning: RPS Compliance……....148
H. Renewable Energy Plan Overview……173
I. Information Updates……..183
E. TRANSMISSION PLAN 184
A. Introduction 184
B. Overview of the Companies' Transmission System 185
C. Specific Requests for Commission Approval for New Transmission Projects 206
D. Informational 290

E. Updates on Previously Approved Transmission Projects 293
F. Transmission Losses 299
G. NorthernGrid Membership 299
SECTION 3. ECONOMIC ANALYSIS 324
A. Overview 324
B. Economic Analysis Methodology 326
C. Key Modeling Assumptions 333
D. Assessment of Need 340
E. Plan Development 342
F. Economic Analysis Results 401
G. Environmental Externalities and Net Economic Benefits 409
H. Selection of the Preferred Plan and Alternate Plan 421
I. Loads and Resources Tables 425
J. Additional Studies and Information 429
K. Long-Term Avoided Costs 442
SECTION 4. FINANCIAL PLAN 446
A. Introduction 446
B. Capital Expenditures 446
C. External Financing Requirements (Redacted) 448
D. Total Rate Base 450
E. Electric Revenue 452
F. Common Methodologies and Assumptions 454
G. Financial Risks 455
H. Customer Rate Impact 466
I. Conclusion 478
SECTION 5. DAY-AHEAD MARKETS AND REGIONAL TRANSMISSION ORGANIZATION 479
I. Introduction 479
II. Day-Ahead Markets and SB 448 Compliance 479
III. Western Resource Adequacy Program 486

1. INTRODUCTION

Nevada Power Company ("Nevada Power") and Sierra Pacific Power Company ("Sierra" and, together with Nevada Power, the "Companies" or "NV Energy") are filing this 2026 joint integrated resource plan ("2026 Joint IRP"). The 2026 Joint IRP focuses on deliverability, reliability, flexibility, and affordability. In determining the Preferred Plan and preparing the Action Plan, the Companies developed five long-term primary expansion plans for meeting customers' needs and evaluated them to determine how each performed across the range of potential load, purchased power price, fuel price and carbon policy scenarios. The Companies have selected as their Preferred Plan the Obsidian Plan, which includes the following projects:

1) Commerce Station Energy Storage – A 100 megawatt ("MW") standalone battery energy storage system ("BESS) in the south region with an in-service date of May 2028
2) White Pine Solar – A 350 MW photovoltaic ("PV") system paired with 350 MW BESS in the north region with an in-service date of December 2028
3) Southern Bighorn 1 and 2 – A 400 MW PV system paired with 400 MW BESS in the south region with an in-service date of July 2028
4) Trego Grid – A 200 MW standalone BESS in the north region with an in-service date of June 2028
5) NGP Blue Mountain Third Amendment – A 30 MW geothermal resource in the north region with an in-service date of March 2027
6) Winston Solar – A 400 MW PV system paired with 400 MW BESS in the north region with an in-service date of October 2029
7) Coyote Energy I – A 600 MW PV system paired with 600 MW BESS in the south region with an in-service date of December 2030
8) Amargosa Energy Center – A 1,200 MW PV system paired with 1,200 MW BESS in the south region with an in-service date of December 2030
9) Boulder Solar III – A 128 MW PV system paired with 128 MW BESS in the south region with an in-service date of June 2028
10) Dry Lake East Energy Storage II – A 150 MW standalone BESS in the south region with an in-service date of December 2027
11) Fish Springs Ranch Energy Storage – A 75 MW BESS paired with an existing resource in the north region with an in-service date of December 2027
12) Jersey Valley Solar and Storage – A 67 MW PV system paired with 67 MW BESS in the north region with an in-service date of January 2028
13) Lux Solar Center – A 125 MW PV system paired with 125 MW BESS in the north region with an in-service date of July 2028
14) Sleepy Orange – A 500 MW PV system paired with 500 MW BESS in the north region with an in-service date of May 2030

15) Castor Storage – A 310 MW eight-hour duration BESS paired with an existing resource in the south region with an in-service date of May 2029
16) Nevada Geothermal Portfolio (OKGP) – A 50 MW geothermal project associated with a customer agreement in the north region with an in-service date of December 2030
17) North Nevada Geothermal Portfolio – A 100 MW geothermal project associated with a customer agreement in the north region with an in-service date of December 2030
18) Iron Point Energy Center – A 250 MW PV system paired with 250 MW BESS associated with an ESA in the north region with an in-service date of December 2029
19) Hot Pot Energy Center – A 350 MW PV system paired with 350 MW BESS associated with an ESA in the north region with an in-service date of October 2029
20) Fort Churchill Additions 1 Project – 401 MW (nominal) new simple-cycle aeroderivative gas turbines ("Aeroderivative CTs") at Fort Churchill Generating Station with an in-service date of June 2030
21) Fort Churchill Additions 2 Project – 401 MW (nominal) new Aeroderivative CTs at Fort Churchill Generating Station with an in-service date of June 2031
22) Fort Churchill Additions 3 Project – 421 MW (nominal) new simple-cycle frame gas turbines ("Frame CTs") at Fort Churchill Generating Station with an in-service date of June 2032
23) Transmission infrastructure projects required for the above-listed renewable, storage, and thermal projects as well as those required to meet customers' needs as presented in the Transmission Plan.[1]

NV Energy evaluated a range of supply-side investments and alternatives to address the significant and rapid load growth projected to occur in Nevada and especially in northern Nevada. The Companies' primary analysis considered five alternative plans to pursue in a long-term planning scenario. Substantial renewable resource needs exist in the face of growing and flattening load, an aggressive Renewable Portfolio Standard ("RPS") ramp up in the next several years, resource cancellations, and current federal policy. Each plan addresses the state's RPS requirement in addition to expected customer participation in the Nevada GreenEnergy Rider ("NGR") program, to the extent possible. The analyzed plans are as follows:

1) **Obsidian Plan**: This plan combines every available renewable and stand-alone BESS project, including the eight-hour Castor Storage project. The plan adds eight Aeroderivative CTs in 2030 and eight more in 2031 and two Frame CTs in 2032. Importantly, the reduced thermal project capacity in this plan relative to the Wildhorse, Ward, and No Open Positions Plans results in reduced capital commitment and enables the

[1] Although not part of the Preferred Plan, the Companies are requesting approval of an amendment to the Libra PV/BESS power purchase agreement ("PPA"). This amendment would add 200 MW BESS paired with an existing resource in the north region with an in-service date of January 2048.

most flexibility among the plans to pivot in future filings in response to potential changes in forecasted load, technology, and the economic and political environment.

2) **Ward Plan**: This plan combines every available renewable and stand-alone BESS project, including the eight-hour Castor Storage project, along with 12 Aeroderivative CTs in 2030 and two Frame CTs each in 2031 and 2032. The plan has a lower open position in 2030 than the Obsidian, Wildhorse, and No Open Position Plans, mitigating the perpetual risk of resource failures and cancellations, and provides more flexibility to pivot in future filings than the Wildhorse and No Open Position Plans, but less so than the Obsidian Plan.
3) **Wildhorse Plan**: This plan combines every available renewable and stand-alone BESS project, including the eight-hour version of Castor Storage. The plan also includes the addition of eight Aeroderivative CTs in 2030, four Frame CTs in 2031, and two Frame CTs in 2032. This plan adds more thermal project capacity than the Obsidian or Ward Plans.
4) **Low Carbon Plan**: Pursuant to NRS § 704.741(3)(c)(1) and NAC § 704.937(1), this plan is required to achieve by 2030 an 80 percent reduction in carbon emissions from the 2005 levels. To achieve this carbon reduction goal, this plan includes placeholder resources starting in 2027. While it is not realistic to expect that incremental renewable resources could be in service prior to 2031, such an assumption is required for the creation of this plan as prescribed by statute. Due to these unrealistically near-term placeholder resources, this plan is not viable.
5) **No Open Position Plan**: Pursuant to NRS § 704.741(3)(c)(2), this plan closes the Companies' open capacity position by 2032 and requires no market capacity purchases from 2032 through 2050. This plan builds the same renewable, storage, and thermal projects as the Wildhorse Case but adds an incremental pair of Frame CTs (421 MW) in 2032.

NV Energy selected the Obsidian Plan as its Preferred Plan and the Ward Plan as its Alternate Plan. Each of Obsidian, Ward, Wildhorse and the No Open Position Plans bolster clean energy generation in the state by adding 4,370 MW of new solar PV PPA projects, 5,405 MW of new paired and stand-alone BESS projects, and 180 MW of new geothermal projects. The Obsidian Plan relies on the least amount of thermal generation in the first five years of the study period, adding projects to serve the growing load but also leaving room to pivot in future filings as the load develops, technology advances, the economic environment changes, and federal and state policy evolves. The peaking turbine projects in this plan generally consist of smaller, aeroderivative models with shorter lead times. The Obsidian Plan add less total thermal capacity than the other viable plans. The Obsidian Plan also avoids the emerging execution risk associated with Frame CT additions in 2031.The Obsidian plan has the least capital commitment of the alternative plans. While it has the third lowest *total* Present Worth of Revenue Requirement ("PWRR") and Present Worth of Societal Costs ("PWSC") of the alternative plans in the 24-year period, it has the lowest *capital cost* PWRR in the 5-year horizon. Of the four viable plans

(excluding the nonviable Low Carbon Plan), Obsidian has the lowest *capital cost* PWRR in the 10-year horizon as well.

The Ward Plan has the second lowest total PWRR in the 5-, 10-, 20-, and 24-year study horizons and the second lowest PWSC. It has a lower open position in 2030 than Obsidian, mitigating the perpetual risk of resource failures and cancellations, but does not avoid the material execution risk of frame CTs in 2031. It provides more flexibility to pivot in future filings than the Wildhorse and No Open Position Plans, but less so than the Obsidian Plan.

The Companies selected the Obsidian Plan as the Preferred Plan as it adds significant new generating and storage projects to serve the growing load and target renewable energy needs but also leaves room to pivot in future filings as circumstances change. It also mitigates the emerging execution risk associated with relying on Frame CTs in 2031. In the selection of the Preferred Plan in this 2026 Joint IRP, the Companies place emphasis on flexibility and executability.

SECTION 2 – SUPPLY PLAN

A. GENERATION

1. Existing Generation

Together, Nevada Power and Sierra currently hold ownership interests in approximately 6,572.5 MW (total peak summer capacity) of thermal and solar generation from the following electric generating facilities (figures reflect summer peak capacities):

- Brunswick Diesel Plant – Sierra: The Brunswick Diesel Plant is a 6 MW peaking plant, comprised of three reciprocating diesel fired engines located in Carson City, Nevada. This plant is operational and designated as Sierra's black start capability. The plant is restricted to 1,098 operating hours and is used primarily for system emergencies and is not included in the L&R tables.

- Chuck Lenzie Generating Station – Nevada Power: Chuck Lenzie Generating Station ("Lenzie") provides 1,182 MW of total peak summer capacity. Lenzie is located approximately 24 miles northeast of Las Vegas, Nevada, and consists of two 2x1 natural gas-fired combined-cycle units (591 MW per block).

- Clark Generating Station – Nevada Power: Clark Generating Station ("Clark") provides 1,162 MW of total peak summer capacity. Clark comprises two 2x1 natural gas-fired combined-cycle units (430 MW), one natural gas-fired combustion turbine unit (54 MW), and 12 natural gas-fired simple-cycle combustion turbines (678 MW). Clark is located in Las Vegas, Nevada.

- Chukar Battery Energy Storage System: The Chukar Battery Energy Storage System ("Chukar") is a 46 MWh energy storage system with a maximum discharge capability of 10 MW over a 4-hour period. Chukar is located in the Tahoe Regional Industrial Complex approximately 15 miles east of Reno, Nevada.

- Clark Mountain Combustion Turbines – Sierra: Clark Mountain Combustion Turbines ("Clark Mountain") consist of two dual-fuel (gas/diesel) combustion turbines with a peak summer capacity of 132 MW. Clark Mountain is co-located with the Tracy Station east of Reno, Nevada.

- Fort Churchill Solar – Sierra: Fort Churchill Solar is a 19.5 MW concentrating PV solar plant located adjacent to the Fort Churchill Station near Yerington, Nevada.

- Fort Churchill Generating Station – Sierra: Fort Churchill Generating Station ("Fort Churchill") comprises two natural gas-fired steam boilers supplying steam turbine generators and is located 10 miles north of Yerington, Nevada. Fort Churchill's total peak summer capacity is 196 MW.

- Goodsprings Heat Recovery – Nevada Power: Goodsprings Heat Recovery ("Goodsprings") provides 5 MW peak summer capacity located adjacent to the Kern River Goodsprings natural gas compressor station, 6 miles from Goodsprings, Nevada. Goodsprings captures waste heat from Kern River Gas's natural gas-fueled compressors and uses a separate generator to produce electricity.

- Harry Allen Generating Station – Nevada Power: Harry Allen Generating Station ("Harry Allen") provides 672 MW of total peak summer capacity. Harry Allen is comprised of 510 MW of natural gas-fired combined-cycle units and 162 MW of natural gas-fired combustion turbine peak summer capacity generated by two gas-fired turbine units (81 MW each). Harry Allen is located 24 miles northeast of Las Vegas, Nevada.

- Las Vegas Generating Station – Nevada Power: Las Vegas Generating Station provides 272 MW peak summer capacity. Formerly Las Vegas Cogen, the Las Vegas Generating Station comprises one (1x1) natural gas-fired aero derivative combined-cycle unit rated at 48 MW, and two (2x1) natural gas-fired aero-derivative combined-cycle units rated at 112 MW each. Las Vegas Generating Station is located in North Las Vegas, Nevada.

- Nellis Solar PV II – Nevada Power: The Nellis Solar PV II plant is a single axis tracker, consisting of ten 1.5 MW blocks, for a total of 15 MW AC capacity. Nellis Solar PV II is located on the Nellis Air Force Base in North Las Vegas, Nevada.

- North Valmy Generating Station – Sierra: North Valmy Generating Station ("Valmy") consists of two natural gas-fired steam boilers supplying steam turbine generators with a peak summer capacity of 522 MW. Sierra owns 50 percent of Valmy, making its share of capacity from the two units at Valmy 261 MW. Valmy is located 19 miles west of Battle Mountain, Nevada. As of the date of the filing, Sierra is converting Valmy Unit 2 to natural gas fuel.

- Reid Gardner Battery Energy Storage System: The Reid Gardner Battery Energy Storage System ("Reid Gardner BESS") is a 506 MWh energy storage system with a maximum discharge capability of 220 MW over a 2-hour duration. Reid Gardner BESS is located approximately 50 miles northeast of Las Vegas, Nevada.

- Silverhawk Generating Station – Nevada Power: Silverhawk Generating Station ("Silverhawk") provides 1,030 MW of total peak summer capacity, including duct burners. Silverhawk consists of one 2x1 natural gas-fired combined-cycle unit (590 MW), two natural gas-fired simple-cycle units (440MW) and is located approximately 26 miles northeast of Las Vegas, Nevada.

- Sun Peak Generating Station – Nevada Power: Sun Peak Generating Station ("Sun Peak") provides 216 MW of summer peak capacity. Sun Peak consists of three dual fuel (natural gas and No. 2 fuel oil) simple-cycle combustion turbine units (each capable of producing 70 MW). Sun Peak is located in Las Vegas, Nevada.

- Tracy Generating Station – Sierra: Tracy Generating Station ("Tracy") provides 785 MW of total peak summer capacity. Tracy comprises one natural gas-fired steam boiler unit (92 MW), one natural gas-fired simple-cycle combustion turbine/duct burner (104 MW) and one natural gas-fired combined-cycle block (589 MW). Tracy is located approximately 15 miles east of Reno, Nevada.

- Walter Higgins Generating Station –- Nevada Power: The Walter Higgins Generating Station ("Higgins") provides 619 MW of total peak summer capacity including duct burners. Higgins consists of one 2x1 natural gas-fired combined-cycle unit and is located approximately 35 miles southwest of Las Vegas, Nevada.

Figure GEN-1 summarizes Nevada Power's and Sierra's generating units and their respective operating characteristics including name plate ratings, winter and summer capacities, commercial operation dates, planning-based retirement dates, and fuel types. Additional unit-specific details, such as heat rates, can be found in the Confidential Technical Appendix GEN-1.

TABLE GEN-1
GENERATING UNIT SUMMARY

Unit	Commercial Operation Date	Planning Retirement Date	Prime Mover[1]	Designation	Name Plate (MW)	Winter Capacity (MW)	Summer Capacity (MW)	Fuel Type	Primary Fuel Storage Capacity[2]	Secondary Fuel Storage Capacity
Sierra										
Brunswick	1960	2028	Recip.	Peaker	6	6	6	Diesel	44 hrs.	0
Clark Mt. 3	1994	2044	CT	Peaker	73	72	66	NatGas /Diesel	0	3.5 days
Clark Mt. 4	1994	2044	CT	Peaker	73	72	66	NatGas /Diesel	0	3.5 days
Chukar BESS	2021	2041	BESS		46	40	40	Grid	n/a	n/a
Fort Churchill 1	1968	2038	Steam	Intermediate	105	113	98	Nat Gas	0	0
Fort Churchill 2	1971	2038	Steam	Intermediate	105	113	98	Nat Gas	0	0
Fort Churchill Solar	2015	2040	Solar		19.5	19.5	19.5	Solar	n/a	n/a
Tracy 3	1974	2038	Steam	Intermediate	110	92	92	Nat Gas	0	0
Tracy 4/5 (Piñon Pine)	1996	2031	CC /Steam	Intermediate	113	108	104	Nat Gas	0	0
Tracy 8, 9, 10	2008	2048	CC /Steam	Base	623	578	589	Nat Gas	0	0
Valmy 1[3]	1981	2049	Steam	Intermediate	127	127	127	Nat Gas	0	0
Valmy 2[3]	1985	2049	Steam	Intermediate	134	134	134	Nat Gas	0	0
Nevada Power										
Clark 4	1973	2035	CT	Peaker	60	63	55	Nat Gas	0	0
Clark 5, 6, 10	1979, 1979, 1994	2044	CC /Steam	Intermediate	236	250	230	Nat Gas	0	0
Clark 7, 8, 9	1980, 1982, 1994	2043	CC /Steam	Intermediate	236	250	230	Nat Gas	0	0
Clark 11 - 22	2008	2049	CT	Peaker	726	684	684	Nat Gas	0	0
Goodsprings	2010	2040		Base	7.5	5	5	Waste Heat	0	0
Harry Allen 3	1995	2046	GT	Peaker	72	84	81	Nat Gas	0	0
Harry Allen 4	2006	2046	GT	Peaker	72	84	81	Nat Gas	0	0
Harry Allen CC	2011	2049	CC /Steam	Base	558	524	510	Nat Gas	0	0
Chuck Lenzie 1	2006	2049	CC /Steam	Intermediate	610	623	621	Nat Gas	0	0
Chuck Lenzie 2	2006	2049	CC /Steam	Intermediate	610	623	621	Nat Gas	0	0
Nellis Solar PVII	2015	2045	Solar		15	15	15	Solar	n/a	n/a
Reid Gardner BESS	2023	2043	BESS		506	440	440	Grid	n/a	n/a
Silverhawk CC	2004	2049	CC /Steam	Intermediate	599	599	607	Nat Gas	0	0
Silverhawk 3 & 4	2024	2054	CT	Peaker		436	448	Nat Gas	0	0
Walt Higgins CC	2004	2049	CC /Steam	Intermediate	688	621	619	Nat Gas	0	0
LV Gen 1	1994	2049	CC /Steam	Intermediate	61.3	51	48	Nat Gas	0	0
LV Gen 2	2004	2049	CC /Steam	Intermediate	148.8	115	112	Nat Gas	0	0
LV Gen 3	2004	2049	CC /Steam	Intermediate	148.8	115	112	Nat Gas	0	0
Sun Peak 3	1991	2041	CT	Peaker	98.1	74	72	NatGas /Diesel	0	0
Sun Peak 4	1991	2041	CT	Peaker	98.1	74	72	NatGas /Diesel	0	0
Sun Peak 5	1991	2041	CT	Peaker	98.1	74	72	NatGas /Diesel	0	180 hours[4]

[1] "Recip." indicates reciprocating engine, "CT" indicates combustion turbine and "CC" indicates combined cycle.
[2] Fuel Storage Capacity assumes full load operation.
[3] The two Valmy units are 50 percent owned by Idaho Power Company. Figure GEN-1 shows only Sierra's 50 percent share of the capacity of the two Valmy units.
[4] No diesel fuel is currently stored on site.

2. Other Generation Assets

Nevada Power holds ownership or participant interests in two other retired and decommissioned generation sites:

- Mohave Generating Station – Nevada Power: The Mohave site is located in Laughlin, Nevada and is the previous site of a 1,500 MW coal-fired generating plant. The site is co-owned by Southern California Edison ("SCE") (56%), the Salt River Project (20%), Nevada Power (14%), and Los Angeles Department of Water and Power (10%). SCE is the controlling partner of the facility. Mohave ceased operations January 1, 2006, and has been decommissioned.[5] In 2015, the co-owners agreed to proceed with selling most of the property through a public sale process. The property was listed by a nationwide commercial real estate firm in October 2016. No sales transactions have been executed at this time.

- Navajo Generating Station – Nevada Power: The Navajo Generating Station is located near Page, Arizona and is the previous site of a 2,250 MW total net capacity coal-fired facility. Nevada Power has ownership rights to 11.3 percent of the Navajo Generating Station. The coal-fired facility ceased operation in November 2019 and has completed decommissioning and demolition of the generating units. The Navajo Project includes the generating station, transmission lines and interconnections, water, and rail facilities, and is co-owned by five parties as tenants-in-common, who together with the United States are "Participants" in the Navajo Project. The Participants' relative interests in the non-transmission facilities are as follows:

    - Salt River Project ("SRP") (42.9%);
    - U.S. Bureau of Reclamation (24.3%), whose share is owned by the SRP;
    - Arizona Public Service (14%);
    - Nevada Power (11.3%); and
    - Tucson Electric Power (7.5%).

[5] As defined in NRS § 704.7332.

3. Status of Previously Approved Generation Projects

a. Valmy Natural Gas Conversion Project

Project Overview

Sierra requested and received approval to complete the conversion of the Valmy coal-fired Units 1 and 2 to operate on natural gas and complete the retirement of coal-fired operations at Valmy in the Fifth Amendment to the 2021 IRP, Docket No. 23-08015. The project costs and continued operation include Idaho Power Company's continued participation in Valmy with its 50 percent ownership, sharing 50 percent of the output and cost.

Valmy Unit 1's conversion was completed in the fall of 2025, and the unit began operation on natural gas in December of 2025. The unit became commercially operational on January 7, 2026. Valmy Unit 2 began its conversion outage in January 2026 and is expected to be completed in May 2026.

The project also assumes requirements to install additional pollution control equipment for the reduction of nitrogen oxides ("NOx") emissions on both units under the Regional Haze Rule.

Idaho Power Company Participation

Idaho Power Company has received acknowledgement of their participation in the gas conversion projects by the Idaho Public Utility Commission. Idaho Power Company submitted and received a Certificate of Public Convenience from the Idaho Public Utility Commission and will continue its full 50 percent participation in the converted units.

Project Costs

The current estimates place total expenditures for the natural gas conversion at $96.2 million total cost ($48.1 million Sierra's share), excluding NOx controls installation. The Commission also approved Sierra's share of the project for $50.43 million ($100.846 million total project), which included the estimated cost for NOx controls. The cash flow projections submitted in the Action Plan budget were based on assumptions outlined in the Fifth Amendment to the 2021 Joint IRP, Docket No. 23-08015, which incorporated these capital improvement projects. The Commission did not approve inclusion of $64.15 million in capital expenditures for improvement projects deemed necessary to ensure the continued operation of the Valmy generating units. Therefore, the Action Plan's budgeted cash flows include both the gas conversion and capital improvement projects which exceed the Commission-approved estimate of $50.43 million for Sierra's share.

Installation of NOx controls will occur following U.S. Environmental Protection Agency ("EPA") approval of the 2025 Nevada Regional Haze State Implementation Plan ("SIP") revision for Valmy

Units 1 and 2, which was finalized by the Nevada Division of Environmental Protection ("NDEP") and submitted to the EPA in May 2025. For Valmy Units 1 and 2, additional cost effective NOx reductions while firing natural gas were determined to be to a control level equivalent to Selective Non-Catalytic Reduction ("SNCR") performance. Sierra and the NDEP also preserved flexibility to meet these limits using either Flue Gas Recirculation ("FGR") or Selective Catalytic Reduction ("SCR"). This flexibility also supports compliance with other federal requirements that may take effect, including the federal Good Neighbor Plan. Installation of NOx controls would be implemented within 36 months following EPA approval of the 2025 Nevada Regional Haze SIP revision for Valmy Units 1 and 2. Section 5 - Environmental Regulation Updates - provides more information on the federal Regional Haze Rule status.

Sierra's share of the NOx controls cost after EPA's approval for Valmy Units 1 and 2 is expected to be between $14.1 and $42.7 million, depending on NOx control selected based on final regulatory determinations. The original cost estimate to install NOx controls that was submitted in the 2021 Joint IRP was based on budgetary quotes from an earlier estimate. The installation of NOx controls is not included in the aforementioned current estimate of total expenditure.

b. Lenzie Thermal Storage Project

Project Overview

The Commission approved the Lenzie Thermal Storage Project in Docket No. 22-03024. This thermal energy storage project will allow the chillers to be turned off up to six (6) hours a day during peak periods and utilize chilled water made during the off-peak hours when chillers are not needed. Removing the chillers from service during peak hours will reduce the plant auxiliary load by 18 MW. Since the Lenzie Generating Station is the only combined-cycle plant that currently has chillers, it is the only plant currently being considered for this type of efficiency enhancement.

The project consists of installing new thermal storage tanks, piping and pumping systems that use the existing plant chillers to produce and store chilled water during off-peak hours. Then during the peak hours, the chillers would be taken out of service, and the chilled water would be taken from the storage tanks and used in place of the chillers. This would reduce the auxiliary electrical load during up to six peak hours by 18 MW while maintaining the plant capacity. Reducing auxiliary electrical load results in a corresponding increase in peak capacity.

Project Costs

The Commission approved the project with an estimated cost of $13 million. Initially, Nevada Power planned to complete the project by June 2024. Unit outage schedules and the need to relocate natural gas lines feeding the units delayed the project, which now is expected to be in

service before June 2027. As a result of scope changes and price escalation, the current project cost is expected to be approximately $20 million.

c. Valmy Simple-Cycle Plant

Project Overview

The Commission approved the Valmy Simple-Cycle Plant project in Docket No. 24-05041. The project consists of two simple-cycle natural gas combustion turbines, each approximately 200 MW, for a total of 400 MW. The units will be sited at Valmy, utilizing existing infrastructure and providing fast-start capability to support system reliability. The units will be designated as Valmy Units 3 and Unit 4 and are scheduled to begin commercial operation in June 2028.

The Commission approved the Utility Environmental Protection Act ("UEPA") application., NDEP issued the Title V air permit modification for public comment in February 2026. NPEP addressed public comments in April 2026. The EPA is finalizing their review, which is expected to be completed in May 2026. Civil design is underway, and procurement of major equipment, including turbines, generators, generator step-up transformers, balance of plant equipment, and power distribution centers, is well advanced.

Project Costs

The project was originally planned under an Engineering, Procurement, and Construction ("EPC") model consistent with the 2024 Joint IRP. The sole EPC bid received exceeded the IRP estimate, driven by regional labor constraints, continued escalation in large electrical equipment costs, and site-specific workforce challenges associated with Valmy's remote location. In response, Sierra transitioned to evaluating a General Contractor ("GC") delivery approach to increase control over engineering, procurement, and critical scopes and to mitigate further cost risk. Under the GC approach, current estimated project costs, excluding AFUDC and tariff impacts, are approximately $752.5 million.

The project remains consistent with least-cost planning principles. As shown in Table Report-1, the Combination Case VBDL1, including the Valmy Simple-Cycle Plant project and assuming even the higher $821.9 million EPC cost estimate, continues to produce the lowest 20- and 26-year PWRR among all evaluated cases.

TABLE REPORT-1

2024 IRP
Total Costs

	10 Year PWRR 2025-2034 (million $)	15 Year PWRR 2025-2039 (million $)	20 Year PWRR 2025-2044 (million $)	26 Year PWRR 2025-2050 (million $)	10 Year PWRR Change vs Least Cost Case (million $)		15 Year PWRR Change vs Least Cost Case (million $)		20 Year PWRR Change vs Least Cost Case (million $)		26 Year PWRR Change vs Least Cost Case (million $)	
VBDL1-New Cost 03.2025	$ 17,734	$ 25,937	$ 33,166	$ 41,562	$ 190	2	$ 102	2	$ -	1	$ -	1
BDL2	$ 17,544	$ 25,835	$ 33,252	$ 42,342	$ -	1	$ -	1	$ 86	2	$ 780	2
No Open Position	$ 18,142	$ 26,923	$ 35,614	$ 46,293	$ 598	3	$ 1,087	3	$ 2,448	3	$ 4,731	3
Low Carbon	$ 20,855	$ 30,587	$ 38,520	$ 47,115	$ 3,311	4	$ 4,752	4	$ 5,355	4	$ 5,553	4

d. Tracy 4/5 Emission Controls Upgrade Project

Project Overview

The Commission approved extending the operating life of Tracy Units 4 and 5 ("Tracy 4/5", also referred to as Piñon Pine Unit 4) to 2049 in Docket No. 23-08015. This extension of operating life required re-evaluation of NOx emission controls to comply with the federal Regional Haze Rule.

For Tracy 4/5, SCR was determined to be an appropriate level of emission controls under the federal Regional Haze Rule for continued operation until 2049. Installation of NOx controls needs to be completed within 36 months following EPA approval of the 2025 Nevada Regional Haze SIP revision for Tracy 4/5. Section 5 - Environmental Regulation Updates - provides more information on the federal Regional Haze Rule status.

Project Costs

In Docket No. 23-08015, the Commission approved $12 million to install SCR as NOx emission controls, without AFUDC. The Commission did not approve Sierra's request for approval of other "capital projects for continued operation" and directed Sierra to include these projects in future IRP filings or general rate case filings.

As of March 2026, the current estimate for project cost was updated to approximately $18.2 million to install SCR for NOx emissions control, without AFUDC. These costs were updated based on a recent indicative estimate by the vendor, received in 2025.

e. Sierra Solar Phase I

Project Overview

The Commission approved Sierra Solar Phase I ("Sierra Solar") in Docket No. 23-08015. Located in Churchill County, the project combines 400 MW of PV generation with an integrated 1,600 MWh BESS. The facility is interconnected at the newly constructed Lantern Switchyard on the

existing 345-kV Valmy-Tracy Transmission Line, ensuring reliable delivery of clean energy to customers across the region. The project was approved with a budget of $1.536 billion, excluding AFUDC.

Significant construction progress continues to be achieved at Sierra Solar. The generation tie, Lantern switchyard, and site substation have been energized and placed in service, and the Sierra Solar BESS was commissioned and began commercial operation on March 20, 2026. On the solar field, all mass grading is complete, and panel deliveries and installations are well underway. Installation activities including racking, module placement, alternating current and direct current terminations, and string wiring are progressing in line with the current construction plan.

As a result, Sierra Solar remains on schedule with the BESS commercial operation by July 2026. The Companies continue to target April 2027 as the PV field commercial operation date.

Project Costs

Current forecasts indicate that Sierra Solar remains within the Commission-approved budget. As of March 2026, approximately $1.28 billion has been expended.

4. New Generation Projects

The Companies completed a generation study to investigate its existing plant sites that could support aeroderivative and frame simple-cycle plants and combined-cycle plants. This study examined the following brownfield sites: Fort Churchill, Harry Allen, Valmy, Higgins, Tracy, and Sierra Solar. This generation study is included in Technical Appendix GEN-3 (Confidential). The Companies evaluated multiple thermal resource options and sites based on the information provided in the generation study, which guided the development of the alternate plans for this filing. The Preferred Plan includes the addition of aeroderivative and frame units at Fort Churchill, as shown below:[6]

Project Estimate Assumptions

The cost estimates for the proposed new-build generation projects are based on firm fixed-price EPC bid data for the Valmy Simple-Cycle Plant, submitted in March 2025. Project cash flows were developed using milestone payment structures provided with the EPC proposal, ensuring consistency between the estimate basis and expected expenditure timing. Additionally, historical experience from NV Energy's recent and comparable simple-cycle generation projects was used

[6] While the projects are presented with updated estimated costs in the Joint Application, the Economic Analysis used an earlier vintage of the estimated costs. The differences between the updated costs in the Joint Application and the costs modeled in the Economic Analysis are presented in the Economic Analysis Section of the narrative, under the heading *Differences Between Projects As Studied and Projects As Requested for Approva*l.

to inform balance-of-plant equipment costs, indirect cost levels, installation approaches, and expected construction logistics. These benchmarks reflect executed and in-progress peaking projects with similar technology, scope, and execution characteristics across NV Energy's generation portfolio. Cash-flow profiles for combustion turbine generators ("CTGs") and other balance-of-plant components outside the EPC scope were developed using representative historical payment curves from prior NV Energy generation projects, ensuring alignment with established procurement and construction practices. The Companies applied a 22.5 percent contingency to capture risks, including permitting durations, construction sequencing, commodity escalation, and site-specific development challenges.

Estimate Risk Considerations

Thermal projects costs have increased in recent years due to a combination of sustained inflation, supply-chain disruptions, and labor shortages, which have driven up the prices of critical materials such as steel, cement, electrical equipment, and fuel, while also extending procurement lead times and construction schedules. At the same time, heightened competition for skilled labor has increased wage rates. These pressures are compounded by geopolitical events and energy market volatility, which have amplified price uncertainty, ultimately raising the total capital cost of power generation assets.[7]

For combustion turbines from the major Original Equipment Manufacturers ("OEM"), costs have risen sharply because demand has surged far beyond manufacturing capacity while the supply base remains highly constrained. These three OEMs effectively supply the global gas turbine market, and orders have accelerated due to data-center growth, electrification, and reliability needs, pushing turbine lead times to roughly 5 to 7 years and driving significant price escalation. At the same time, production is limited by shortages of specialized labor and critical hot-section components (such as single-crystal blades and forged rotors) that are manufactured by only a handful of suppliers worldwide. This imbalance has made turbines the single largest cost driver in new gas-fired plants and has shifted project economics from fuel-driven decisions to

[7] Callum Johnson, *Energy and Infrastructure Project Risks Around Escalation*, Feb. 19, 2024, available at https://www.whitecase.com/insight-alert/energy-and-infrastructure-project-risks-around-escalation; Mark Shenk, *Rush for US Gas Plants Drives Up Costs, Lead Times*, July 21, 2025, available at https://www.reuters.com/business/energy/rush-us-gas-plants-drives-up-costs-lead-times-2025-07-21/; Al Greenwood, *INSIGHT: Large Construction Cost Overruns Hit US Chemical Plants*, Sept. 21, 2023, available at https://www.icis.com/explore/resources/news/2023/09/21/10927175/insight-large-construction-cost-overruns-hit-us-chemical-plants/; IEA, *Rising Component Prices and Supply Chain Pressures Are Hindering the Development of Transmission Grid Infrastructure*, Feb. 25, 2025, available at https://www.iea.org/news/rising-component-prices-and-supply-chain-pressures-are-hindering-the-development-of-transmission-grid-infrastructure.

procurement-driven viability, with OEM pricing reflecting backlog risk, inflation, and supply-chain exposure.[8]

Key estimate risks are primarily associated with craft labor availability and labor attraction and retention costs, particularly given sustained construction activity across the western United States. Tight labor market conditions may place upward pressure on installed costs and execution efficiency for generation construction.

In addition, as discussed above the current market demand for CTGs remains exceptionally high, resulting in significant pricing volatility. Recent market pricing indicates that CTG costs have increased materially relative to earlier budgetary inputs. This observed increase highlights the rapidly changing market conditions for CTGs.

Tariff and sales/use tax considerations were applied appropriately to major equipment packages, including CTGs, balance-of-plant equipment, structural steel, and electrical materials in alignment with Nevada's tax treatment of construction materials and equipment, and these tax elements were incorporated directly into the capital cost basis as documented in the Technical Appendix GEN-3 study's sales tax calculations.

Owner's indirect costs were developed using NV Energy precedents and include project management, engineering, permitting, environmental studies, construction oversight, geotechnical work, security systems, interconnection requirements, and project closeout activities, all of which materially influence total project cost and schedule expectations. These indirect costs reflect typical requirements for complex generation additions and ensure that non-EPC owner responsibilities are fully captured in the total capital requirement.

NV Energy escalated project costs estimates to the year of installation using a 2.5 percent yearly inflation rate based on the assumptions in the Financial Plan.

[8] Jared Anderson, *US Gas-Fired Turbine Wait Times as Much as Seven Years; Costs Up Sharply*, May 20, 2025, available at https://www.spglobal.com/energy/en/news-research/latest-news/electric-power/052025-us-gas-fired-turbine-wait-times-as-much-as-seven-years-costs-up-sharply; SustainablePowerNews, *Gas Turbine Backlog Crisis: 2026 Orders Double as Buyers Face 5-Year Wait Times*, March 26, 2026, available at https://sustainablepowernews.com/gas-turbine-backlog-crisis-orders-double-as-buyers-face-5-year-wait-times/; ManufacturingToday, *Gas turbine costs surge 195% as demand outpaces supply*, Apr. 3, 2026, available at https://www.manufacturingtodayindia.com/gas-turbine-costs-surge-195, Kevin Clark, *Gas turbine prices climb 195% as supply crunch reshapes power development*, Apr. 1, 2026, available at https://www.power-eng.com/gas/turbines/gas-turbine-prices-climb-195-as-supply-crunch-reshapes-power-development/.

Evaluated Technologies:

Aeroderivative Combustion Turbines

Aeroderivative CTGs were evaluated as smaller, modular thermal resources capable of providing flexible capacity support. These units were modeled as available beginning in 2030 and were typically represented in 200 MW aggregate blocks. Aeroderivative CTGs offer relatively short lead times, rapid start capability, and reduced execution risk compared to larger frame-based units, making them suitable for meeting near-term capacity needs and addressing uncertainty in load growth and resource timing. Additionally, simple-cycle aeroderivatives generally have low water requirements because, unlike combined-cycle units, simple-cycle operations do not require large-scale condenser cooling. Water use is generally limited to optional performance enhancement.

Frame Combustion Turbines

Frame CTGs were evaluated as larger standalone simple-cycle thermal resources capable of providing significant incremental capacity through fewer, higher output units. These units offer higher nameplate capacity per installation relative to aeroderivative technologies and can be effective for meeting bulk capacity needs once constructed. Simple-cycle frame CTGs generally have low water requirements because, unlike combined-cycle units, they do not require large scale condenser cooling and rely primarily on ambient air, with water use generally limited to optional performance enhancement. Frame CTGs have longer procurement, manufacturing, and construction lead times than aeroderivative CTGs.

During development of the IRP, information emerged indicating that, due to the increased demand for frame combustion turbines, these units are likely no longer available in time to achieve a 2031 commercial operation date. This development was a factor in the selection of the Preferred Plan, which includes aeroderivative CTGs in-service in 2031 rather than Frame CTGs, as described in the Economic Analysis Section of the narrative.

Small Frame 2x1 Combined Cycle

The small frame 2x1 combined-cycle configuration was evaluated as a thermal resource. This configuration consists of two frame F class CTGs paired with a single steam turbine nominally rated at roughly 760 MW. By recovering waste heat from CTGs through a steam cycle, combined-cycle resources offer significantly higher thermal efficiency than simple-cycle units. If configured with air-cooled condensers rather than wet cooling systems like a cooling tower, small frame 2x1 combined-cycle facilities can reduce water use by about 95% relative to wet-cooled designs.[9]

[9] U.S. Energy Information Administration, Some U.S. electricity generating plants use dry cooling, Aug. 29, 2018, available at https://www.eia.gov/todayinenergy/detail.php?id=36773.

Large Frame 2x1 Combined Cycle

Large frame 2x1 combined-cycle resources were evaluated as a thermal resource. These facilities consist of two large frame H or J class CTGs paired with a single steam turbine and represent the highest capacity thermal resources evaluated in the IRP. These facilities provide the highest efficiency and output among the thermal technologies evaluated and are well suited for sustained operation over extended periods and are nominally rated at roughly 1,250 MW. If configured with air-cooled condensers rather than wet cooling systems like a cooling tower, large frame 2x1 combined-cycle facilities can reduce water use by about 95% relative to wet-cooled designs.[9]

a. Fort Churchill Additions 1 Project

Project Overview

The Fort Churchill Additions 1 Project which is planned to be commercially operational in 2030 is made up of eight ~53.9 MW aeroderivative simple-cycle generating units, designed for peaking service in Sierra's service territory.

The aeroderivative generating units for the Fort Churchill Aeroderivative Additions Project are highly efficient, state-of the-art, combustion turbines. To reduce emissions, a combination of dry low-NOx combustion systems, selective catalytic reduction and carbon monoxide catalyst will be incorporated into the design.

It is not certain that these units will meet the Greenhouse Gas Emissions Standards ("GHG Emissions Standards") carbon dioxide ("CO_2") emissions limit for intermediate-load operation (capacity factor between 20 and 40 percent) under all operating scenarios and are, therefore, were conservatively considered as low-utilization resources (capacity factor of up to 20 percent) for planning purposes. Section 5 - Environmental Regulation Updates - provides more information on the GHG Emissions Standards status.

Each aeroderivative gas turbine can reliably produce approximately 50 MW within 5 minutes. The unit can also balance renewable resources by load-following at 50 MW/min ramp rates while maintaining emissions compliance.

Natural Gas Supply

The Fort Churchill Additions 1 Project is expected to rely on natural gas transportation service. As explained in [Title], Section C – Fuel Supply, Part 1 – Current Physical Gas Supply and Proposed Pipeline Expansion, the Companies requested proposals from three gas pipeline companies. After evaluating the proposals, the Companies selected the proposal provided by Great Basin Gas Transmission Company. The expansion provides sufficient capacity to supply the Forth Churchill Additions 1, 2 and 3 Projects. In addition, the expansion proposal provides sufficient pressure to support LM 6000 units.

Project Costs

The estimated cost of the Fort Churchill Additions 1 Project is approximately $2.007 billion (2030$) (without AFUDC). Table GEN-2 shows the construction costs by year, and Table GEN-3 shows the line-item detail of the project cost. There is always a risk that material, equipment, and labor costs can increase or decrease between the time of the cost estimates and the time of contract award and procurement. Increases in construction costs in the past few years have been dramatic; however, Sierra has developed estimated costs for major contracts, based on costs seen for the Silverhawk Peaker Project and the Valmy Simple-Cycle Plant, and believes that the costs to construct the Fort Churchill aeroderivative simple-cycle additions project are reasonable. Sierra has placed the order on the CTGs and will be required to make down payments prior to Commission approval.

TABLE GEN-2
FORT CHURCHILL ADDITIONS 1 PROJECT
ESTIMATED ESCALATED ANNUAL CONSTRUCTION COSTS
(EXCLUDING AFUDC)

In thousands	
Year	**Amount**
2026	$197,322
2027	$347,082
2028	$247,807
2029	$786,705
2030	$427,665
Total (2030$)	$2,006,583

REDACTED PUBLIC VERSION

TABLE GEN-3
FORT CHURCHILL ADDITIONS 1 PROJECT
ESTIMATED ESCALATED CONSTRUCTION COSTS BY MAJOR CATEGORY
(EXCLUDING AFUDC)
(REDACTED)



To preserve the 2030 in-service date, Sierra committed [redacted] million on the Fort Churchill Additions 1 Project to secure long-lead equipment such as the CTGs, generator step-up transformers, and high voltage circuit breakers. The company intends to limit other expenditures until the Commission approves a resource plan which includes the project.

Project Schedule

Table GEN-4 shows the preliminary project schedule for the Fort Churchill Additions 1 Project.

TABLE GEN-4
FORT CHURCHILL ADDITIONS 1 PROJECT - PROJECT SCHEDULE

Task Name	Start	Finish
NV Energy – Fort Churchill Aeroderivative 2030 Schedule		
Develop Specification for EPC RFP Package	May 2026	December 2026
MAJOR EQUIPMENT PROCUREMENTS	March 2026	January 2030
Generator Step-up Transformers (GSUTs): Lead-time	March 2026	January 2029
Combustion Turbine Lead Time	July 2026	January 2030
OWNER's ENGINEERING	May 2026	October 2030
PERMITTING & LGIA	March 2026	
LGIA Process - Studies and Approval	March 2026	October 2027
Secure PUCN IRP approval	November 2026	
Title V Air Permit	January 2027	November 2028
UEPA Permit	January 2028	February 2028
ENGINEER-PROCURE-CONSTRUCT Contractor (EPC)	January 2028	July 2030
Construction	May 2029	April 2030
Commissioning and Startup	April 2030	June 2030

Job Benefits

The ongoing operation of these units will be done through existing plant staff; however, during construction, the project is expected to utilize skilled labor. This project would create approximately 500 skilled jobs during construction.

b. Fort Churchill Additions 2 Project

Project Overview

The Fort Churchill Additions 2 Project, which is planned to be commercially operational in 2031, is made up of eight ~50 MW aeroderivative simple-cycle generating units, designed for peaking service in Sierra's service territory.

The aeroderivative generating units for the Fort Churchill Additions 2 Project are highly efficient, state-of the-art, combustion turbines. To reduce emissions, a combination of dry low-NOx combustion systems, selective catalytic reduction and carbon monoxide catalyst will be incorporated into the design.

It is not certain that these units will meet the GHG Emissions Standards CO_2 emissions limit for intermediate-load operation (capacity factor between 20 and 40 percent) under all operating scenarios and are, therefore, were conservatively considered as low-utilization resources (capacity factor of up to 20 percent) for planning purposes. Section 5 - Environmental Regulation Updates - provides more information on the GHG Emissions Standards status.

The aeroderivative gas turbine can reliably produce approximately 50 MW within 5 minutes. The unit can also balance renewable resources by load-following at 50 MW/min ramp rates while maintaining emissions compliance.

Natural Gas Supply

See the discussion of the Fort Churchill natural gas expansion above.

Project Costs

The total cost of the Fort Churchill Additions 2 Plant is approximately $2.048 billion (2031$) (without AFUDC). Table GEN-5 shows the construction costs by year, and Table GEN-6 shows the line-item detail of the project cost. There is always a risk that material, equipment, and labor costs can increase or decrease between the time of the cost estimates and the time of contract award and procurement. Increases in construction costs in the past few years have been dramatic; however, Sierra has developed estimated costs for major contracts, based on costs seen for the Silverhawk Peaker Plant and the Valmy Simple-Cycle Plant project, and believes that the costs to construct the Fort Churchill Additions 2 Project reasonable. Sierra has not yet made commitments for the turbines and generators but will be required to make down payments prior to Commission Approval.

REDACTED PUBLIC VERSION

TABLE GEN-5
FORT CHURCHILL ADDITIONS 2 PROJECT
ESTIMATED ESCALATED ANNUAL CONSTRUCTION COSTS
EXCLUDING AFUDC

In thousands	
Year	Amount
2026	$ 154,101
2027	$ 44,194
2028	$ 354,890
2029	$ 253,383
2030	$ 804,409
2031	$ 437,286
Total (2031$)	$2,048,263

TABLE GEN-6
FORT CHURCHILL ADDITIONS 2 PROJECT
ESTIMATED ESCALATED CONSTRUCTION COSTS BY MAJOR CATEGORY
(EXCLUDING AFUDC)
(REDACTED)



Sierra has not spent or committed any significant expenditures on the Fort Churchill Additions 2 Project and intends to limit expenditures until the Commission approves the project.

Project Schedule

Table GEN-7 shows the preliminary project schedule for the Fort Churchill Additions 2 Project.

TABLE GEN-7
FORT CHURCHILL ADDITIONS 2 PROJECT - PROJECT SCHEDULE

Task Name	Start	Finish
NV Energy – Fort Churchill Aeroderivative 2031 Schedule		
MAJOR EQUIPMENT PROCUREMENTS	October 2026	January 2031
Generator Step-up Transformers (GSUTs): Lead-time	April 2027	November 2030
Combustion Turbine Lead Time	July 2027	January 2031
OWNER's ENGINEERING	February 2027	October 2031
Develop Specification for EPC RFP Package	February 2027	November 2027
PERMITTING & LGIA	March 2026	
DNR/LGIA Process - Studies and Approval	March 2026	February 2028
Secure PUCN IRP approval	November 2026	
Title V Air Permit	February 2028	January 2030
UEPA Permit	June 2029	March 2030
ENGINEER-PROCURE-CONSTRUCT Contractor (EPC)	December 2028	July 2031
Construction	May 2030	April 2031
Commissioning and Startup	April 2031	June 2031

Job Benefits

The ongoing operation of these units will be done through existing plant staff; however, during construction, the project is expected to utilize skilled labor. This project would create approximately 500 skilled jobs during construction.

c. Fort Churchill Additions 3 Project

Project Overview

The Fort Churchill Additions 3 Project is planned to be commercially operational in 2032 and is made up of two ~200 MW simple-cycle frame generating units, designed for peaking service in Sierra's service territory.

The simple-cycle generating unit for the Fort Churchill Additions 3 Project is a highly efficient, state-of-the-art, combustion turbines. To reduce emissions, a combination of dry low-NOx combustion systems, selective catalytic reduction and carbon monoxide catalyst will be incorporated into the design.

It is not expected that these units will meet the GHG Emissions Standards CO_2 emissions limit for intermediate-load operation (capacity factor between 20 and 40 percent) under all operating scenarios and are, therefore, were conservatively considered as low-utilization resources (capacity factor of up to 20 percent) for planning purposes. Section 5 - Environmental Regulation Updates - provides more information on the GHG Emissions Standards status.

The simple-cycle frame gas turbine can reliably produce approximately 200 MW within 10 minutes and can reach full load in under 11 minutes. The unit can also balance renewable resources by load-following at 40 MW/min ramp rates while maintaining emissions compliance.

Natural Gas Supply

See the discussion of the Fort Churchill gas expansion above. Because frame units operate with lower gas pressure, the Companies will regulate pressure down to acceptable operating parameters through on-site equipment.

Project Costs

The total cost of the Fort Churchill Additions 3 Project is approximately $978 million (2032$) (without AFUDC). Table GEN-8 shows the construction costs by year, and Table GEN-9 shows the line-item detail of the project cost. There is always a risk that material, equipment, and labor costs can increase or decrease between the time of the cost estimates and the time of contract award and procurement. Increases in construction costs in the past few years have been dramatic; however, Sierra has developed estimated costs for major contracts, based on costs seen for the Silverhawk Peaker Project and the Valmy Simple-Cycle Plant, and believes that the costs to construct a Fort Churchill Additions 3 Project are reasonable. Sierra has not yet made commitments for the turbines and generators but will be required to make down payments prior to Commission approval.

REDACTED PUBLIC VERSION

TABLE GEN-8
FORT CHURCHILL ADDITIONS 3 PROJECT
ESTIMATED ESCALATED ANNUAL CONSTRUCTION COSTS
EXCLUDING AFUDC

In thousands	
Year	**Amount**
2026	$101,831
2027	$41,304
2028	$87,724
2029	$175,275
2030	$260,587
2031	$205,110
2032	$106,398
Total (2032$)	$978,229

TABLE GEN-9
FORT CHURCHILL ADDITIONS 3 PROJECT
ESTIMATED ESCALATED CONSTRUCTION COSTS BY MAJOR CATEGORY
(EXCLUDING AFUDC)
(REDACTED)



Sierra has not spent or committed any significant expenditures on the Fort Churchill Additions 3 Project and intends to limit expenditures until the Commission approves a resource plan which includes the project.

Project Schedule

Table GEN-10 shows the preliminary project schedule for the Fort Churchill Additions 3 Project.

TABLE GEN-10
FORT CHURCHILL ADDITIONS 3 PROJECT - PROJECT SCHEDULE

Task Name	Start	Finish
NV Energy – Fort Churchill Frame Units 2032 Schedule		
MAJOR EQUIPMENT PROCUREMENTS	April 2026	April 2031
Combustion Turbine Lead Time	May 2026	March 2031
Generator Step-up Transformers (GSUTs): Lead-time	September 2027	April 2031
OWNER's ENGINEERING	May 2026	October 2032
Develop Specification for EPC RFP Package	November 2026	May 2027
ENGINEER-PROCURE-CONSTRUCT Contractor (EPC)	October 2027	July 2032
PERMITTING & LGIA	March 2026	
DNR/LGIA Process - Studies and Approval	March 2026	October 2027
Secure PUCN IRP approval	November 2026	
Title V Air Permit	March 2028	March 2030
UEPA Permit	May 2029	March 2030
Construction	June 2030	January 2031
Commissioning and Startup	February 2031	June 2032

Job Benefits

The ongoing operation of these units will be done through existing plant staff; however, during construction, the project is expected to utilize skilled labor. This project would create approximately 500 skilled jobs during construction.

d. Early Investment in Future Placeholder Thermal Projects

To support the early development and preliminary design engineering of a future combustion turbine resource (anticipated in 2034 under the Base Load Forecast), the Companies are requesting early development funding to initiate preliminary engineering and project development activities. This work would occur after the Companies identify the site and select the combustion turbine technology configuration. The requested early investment is intended to improve project definition, enhance estimate accuracy, reduce execution risk, and provide the Commission and stakeholders with a more reliable basis for evaluating the future project.

As part of this preliminary work, the Companies may engage an Engineer of Record ("EOR") firm to advance the project to approximately thirty percent engineering design. This level of design development would include preliminary equipment arrangements, site layout, major balance-of-plant scope, and key design interfaces. Advancing the design to this stage would allow the Companies to mature the technical definition of the project, identify key scope drivers and site-specific constraints, and reduce uncertainty prior to committing to full project execution before making larger capital commitments.

Following completion of the preliminary engineering work, the Companies may then engage an EPC contractor to perform a constructability review based on the thirty percent design package. This constructability effort would help validate execution assumptions, identify potential construction constraints, assess labor and site logistics, and confirm that the proposed design can be efficiently and safely built at the selected location. In addition, this work is expected to support development of a preliminary schedule of values ("SOV"), which would provide a more detailed cost estimate and improved visibility into major cost components, project phasing, and execution risks.

In addition to preliminary engineering and constructability review activities, the requested early development funding includes related early-stage activities such as NV Energy labor and overheads, owner's engineering and consulting support, environmental and permitting support, geotechnical survey work, escalation, and contingency. Collectively, these activities would allow the Companies to move beyond planning-level assumptions and establish a more reliable basis for future cost, schedule, permitting, and execution-risk evaluations.

Importantly, these early development costs are expected to contribute directly to the future project if it is approved. They are not expected to be sunk costs, as the engineering design, constructability review, surveys, permitting support, and estimate development would become part of the project development record and support future project execution.

REDACTED PUBLIC VERSION

The estimated preliminary development costs for these early-stage activities are shown in Tables GEN-11 and GEN-12 for the simple-cycle 2034 placeholder project.

TABLE GEN-11
EARLY INVESTMENT FOR FUTURE 2034 THERMAL PROJECT
ESTIMATED ESCALATED PRELIMINARY DEVELOPMENT COSTS
EXCLUDING AFUDC

In thousands	
Year	**Amount**
2027	$12,025
2028	$1,016
Total (2028$)	$13,041

TABLE GEN-12
EARLY INVESTMENT FOR FUTURE 2034 THERMAL PROJECT
ESTIMATED ESCALATED PRELIMINARY DEVELOPMENT COSTS
(EXCLUDING AFUDC)
(REDACTED)



Table GEN-13 shows a preliminary development schedule for early investment activities associated with the future placeholder 2034 thermal projects. This schedule reflects the anticipated sequence of activities to advance preliminary engineering, obtain contractor input, and develop a more detailed basis for project cost and execution planning. The schedule is not strictly sequential,

as certain activities may run concurrently; accordingly, individual task durations do not sum to the total 23-month schedule duration.

TABLE GEN-13
FUTURE 2034 THERMAL PROJECTS
PRELIMINARY DEVELOPMENT SCHEDULE

Task Name	Duration
NV Energy – Placeholder Thermal Projects Preliminary Development Schedule	23 Months
Develop project basis and preliminary design criteria	3 Months
EOR to advance 30% engineering design	6 Months
Perform site surveys and geotechnical investigations	3 Months
Environmental screening and permitting strategy development	6 Months
Preliminary interconnection request submission	1 Month
Develop EPC bid package / preliminary execution strategy	4 Months
EPC to perform constructability review based on 30% design	3 Months
EPC to confirm EOR SOV	3 Months
Prepare updated cost estimate and risk assessment to support internal evaluation and project development decision-making	1 Month

Accordingly, the Companies believe that reasonable early investment in design development, constructability review, and estimate refinement for the future placeholder 2034 thermal project is a prudent planning measure. These activities would support better project definition, improve cost confidence, and help preserve the ability to meet future in-service dates of the simple cycle thermal resource.

5. Environmental Regulation Updates

Certain existing, recently promulgated and proposed environmental regulations are summarized below as they directly impact or may have future impacts on the operations of the Companies' generating units. The summaries have been updated to reflect most current information since Docket No. 24-05041.

Regional Haze Rule

Since March 2024,[10] Sierra has worked with the NDEP to evaluate the Regional Haze Rule for the Second Decadal (Second Implementation) Planning Period (2018-2028) requirements applicable to Valmy Units 1 and 2 (following natural gas conversion) and Tracy 4/5. For Valmy Units 1 and 2, additional NOx reductions while firing natural gas were determined to be cost-effective through 2049, to a control level equivalent to SNCR performance. Sierra and the NDEP also preserved flexibility to meet these limits using either FGR or SCR. This approach also supports compliance with other federal requirements that may take effect, including the federal Good Neighbor Plan (see update below). For Tracy 4/5, SCR was determined to be cost-effective through 2049.

The NDEP has worked with the EPA and federal land management agencies to revise Nevada's Regional Haze SIP. This work included drafting state regulations to make Regional Haze requirements for Valmy Units 1 and 2 and Tracy 4/5 legally enforceable and conducting public outreach.[11] The state regulation sets the NOx emission levels, identifies control technologies, and establishes a compliance deadline. Under the state regulation, NOx controls must be installed within 36 months of EPA approval of Nevada's Regional Haze SIP for these units. The NDEP submitted the SIP revision for North Valmy Units 1 and 2 and Tracy 4/5 to the EPA in May 2025 ("2025 Regional Haze SIP Revision").

As part of a separate July 2024 consent decree between the EPA and the Sierra Club, National Parks Conservation Association, and Environmental Integrity Project required the EPA to approve or deny Nevada's Regional Haze SIP by December 15, 2025.[12] On October 23, 2025, the EPA published a proposed action and opened a 30-day public comment period that closed on November 24, 2025. The EPA issued its final action on February 6, 2026; this timing complied with the consent decree, with additional time allowed due to the government shutdown. In the final action, the EPA approved portions of the 2022 Nevada Regional Haze SIP, including the July 2023 withdrawal of proposed retirement determinations for Tracy 4/5 and Valmy Units 1 and 2, and portions of the 2025 Nevada Regional Haze SIP Revision.[13] The EPA did not act on the revised reasonable progress determinations or the proposed NOx emission controls for Tracy 4/5 and Valmy Units 1 and 2 included in the 2025 Regional Haze SIP Revision, because those revisions were submitted after the July 2024 consent decree.

[10] Docket No. 23-08015, April 9, 2024, Order approved Sierra's requests to proceed with the Valmy Units 1 and 2 coal-to-gas conversion and Tracy 4/5 projects.
[11] NAC Chapter 445B, as amended by regulation adopted by the Nevada State Environmental Commission in 2024, establishing source-specific Regional Haze requirements for NV Energy's North Valmy Generating Station (Units 1 and 2) and Tracy Generating Station (Units 4 and 5).
[12] *Sierra Club, et al. v. U.S. Environmental Protection Agency*, No. 1:23-cv-01744-JDB (D.D.C.), Consent Decree entered July 12, 2024, establishing deadlines for EPA action on Regional Haze State Implementation Plans, including plans submitted by Nevada.
[13] 90 Fed. Reg. 48,481 (Oct. 23, 2025) (proposed rule) and 91 Fed. Reg. 5321 (Feb. 6, 2026), the EPA refers to the Nevada SIP filings as the "2022 Nevada Regional Haze Plan" and the "2025 SIP Supplement."

The EPA is expected to evaluate the proposed NOx controls for Valmy Units 1 and 2 and Tracy 4/5 included in the 2025 Regional Haze SIP Revision through a separate action. The EPA has not provided a schedule for that evaluation; however, for planning purposes, Sierra anticipates the EPA may act later in 2026. Under the state regulation, NOx controls must be installed within 36 months following EPA approval of the proposed NOx controls for Tracy 4/5 and Valmy Units 1 and 2.

Good Neighbor Plan

The federal "Good Neighbor Plan" for the 2015 Ozone National Ambient Air Quality Standards ("NAAQS") became effective on August 4, 2023, and was intended to take effect for 22 states, including Nevada.[14] The rule has been subject to litigation since issuance and is currently stayed in effective states, including Nevada. If it were to take effect, the Good Neighbor Plan would require upwind states to reduce emissions of the ozone precursor NOx from electric generating units ("EGUs") and certain stationary industrial sources. For EGUs, the program sets statewide ozone-season NOx emissions budgets and allocates emissions allowances to individual EGUs for May–September through a market-based trading program.

On January 30, 2026, the EPA proposed Phase 1 of its reconsideration of the federal Good Neighbor Plan.[15] Under this reconsideration, the EPA intends to withdraw its February 12, 2023 disapproval and approve Nevada's September 28, 2018 Good Neighbor SIP submission. The EPA acknowledges that Nevada applied the four-step interstate transport framework (the "Framework") and determined that Nevada sources do not contribute more than 1% of the NAAQS to any nonattainment or maintenance receptor. If the EPA's reconsideration is finalized as proposed, Nevada would not be required to adopt any new permanent, enforceable emission control measures under Nevada's Good Neighbor SIP.

If the federal Good Neighbor Plan were to ultimately take effect and Nevada was included, the program would have affected Valmy Units 1 and 2 while operating on coal. Emission allowances would have been constrained based on NOx emission rates achievable with SCR controls under coal-fired operation. Given uncertainty in the litigation outcome and potential applicability to Nevada, the 2025 Nevada Regional Haze SIP revision and related state regulation incorporated flexibility in the NOx control approach for Valmy. This flexibility allows consideration of SCR (if ultimately needed after conversion to natural gas) to support compliance and provide sufficient ozone-season allowances under the Good Neighbor Plan. No other EGUs would have been required to install NOx controls. Nevada's annual EGU allowance budget would be set through a "dynamic" budgeting process based on recent operations and associated emissions, further limiting ozone-season NOx emissions.

[14] 88 Fed. Reg. 36,654 (June 5, 2023).
[15] 91 Fed. Reg. 4,026 (Jan. 30, 2026).

Greenhouse Gas Emissions Standards

On May 9, 2024, the EPA published a final rule for federal GHG Emissions Standards for fossil fuel-fired electric generating unit.[16] The GHG Emissions Standards became effective on July 8, 2024. Litigation commenced following publication. However, the GHG Emissions Standards remain in effect as published.

On June 17, 2025, the EPA proposed repealing the GHG Emissions Standards in its entirety.[17] The EPA is also proposing, as an alternative, to repeal a narrower set of requirements that includes the emission guidelines for existing fossil fuel-fired steam generating units, the carbon capture and sequestration/storage ("CCS")-based standards for coal-fired steam generating units undertaking a large modification, and the CCS-based standards for new baseload stationary combustion turbines. On February 27, 2026, the EPA submitted a status report to the U.S. Court of Appeals for the District of Columbia Circuit indicating that the proposed rulemaking process is ongoing and that the agency continues to analyze and gather information from a variety of sources.[18] In that report, the EPA stated it intended to send a draft final rule to the Office of Management and Budget in early spring 2026. The next EPA status report to the court is due on May 29, 2026.

The GHG Emissions Standards currently in effect establishes the final best system of emissions reduction ("BSER") and resulting performance standards for new gas-fired combustion turbines, existing coal-fired steam generating units, and existing oil- and gas-fired steam generating units. The final rule did not establish performance standards for existing gas-fired combustion turbines.

For existing oil- or natural gas-fired steam generating units, the GHG Emissions Standards do not require installation of CCS if the unit maintains routine efficient operation and achieves a CO_2 emission rate below 1,400 lb. CO_2/MWh (if the capacity factor is 45 percent or greater) or below 1,600 lb. CO_2/MWh (if the capacity factor is less than 45 percent), beginning January 1, 2030.

For new gas units, the final standards use capacity factor thresholds to differentiate between baseload units (capacity factors greater than 40 percent), intermediate-load units (capacity factors between 20 and 40 percent), and low-utilization units (capacity factors of 20 percent or less). Capacity factors for these categories are measured on a 12-month rolling average.

- For new baseload units, the BSER is achieved in two phases. Phase 1 requires highly efficient operation, achieving a performance standard of 800 lb. CO_2/MWh through 2031. Phase 2 requires CCS at a 90 percent capture rate, or an emissions rate of 100 lb. CO_2/MWh, starting in 2032.

[16] *New Source Performance Standards for Greenhouse Gas Emissions from New, Modified, and Reconstructed Fossil Fuel-Fired Electric Generating Units; Emission Guidelines for Greenhouse Gas Emissions from Existing Fossil Fuel-Fired Electric Generating Units; and Repeal of the Affordable Clean Energy Rule*, 89 Fed. Reg. 39,798 (May 9, 2024).
[17] 90 Fed. Reg. 25,752 (June 17, 2025).
[18] U.S. Environmental Protection Agency, *Status Report to the U.S. Court of Appeals for the District of Columbia Circuit* (Feb. 27, 2026), Case No. 24-1120.

- For new intermediate-load units, the BSER is efficient operation resulting in an emissions limitation of 1,170 lb. CO_2/MWh, effective upon the start of operation.

- For new low-utilization units, the BSER requires the use of clean fuels (i.e., natural gas, Nos. 1 and 2 fuel oil), with a resulting standard of 120–160 lb. CO_2/MMBtu, depending on unit-specific characteristics.

These GHG Emissions Standards, currently in effect, result in the following considerations for and the Companies fleet:

- Valmy Units 1 and 2 (converted to natural gas operation), Fort Churchill units, and Tracy Unit 3 would be regulated as existing gas-fired steam units. These units would be required to maintain routine efficient operation and achieve CO_2 emission rates between 1,400 and 1,600 lb. CO_2/MWh depending on capacity factor. Valmy Units 1 and 2 operating on natural gas will also meet these CO_2 emission rates.

- The constructed Silverhawk Peaker Project, approved Valmy Simple-Cycle Plant, and proposed Fort Churchill 1, 2, and 3 additions (simple-cycle units that would likely be operated as low-utilization units (up to a 20 percent capacity factor)) with no CO_2 emission rate requirement. If these units were capable of operating as intermediate-load units (20 to 40 percent capacity factor), they would need to meet a CO_2 emission rate of 1,170 lb. CO_2/MWh on a 12-month rolling average while operating on natural gas.

- The remaining existing Companies units are not impacted by the current GHG Emissions Standards.

Mercury and Air Toxics Standards

On May 7, 2024, the EPA finalized amendments to the Mercury and Air Toxics Standards ("MATS") to strengthen the National Emission Standards for Hazardous Air Pollutants for coal- and oil-fired electric utility steam generating units.[19] The amendments would have applied to Valmy Units 1 and 2 only if they continued operating on coal. Historical emissions test data indicate the units generally would have met the revised limit; however, compliance would have required adding particulate matter ("PM") continuous emissions monitoring system ("CEMS") capability and integrating it into existing facility systems. On February 19, 2026, the EPA finalized the repeal of the 2024 amendments.[20]

[19] 89 Fed. Reg. 38,508 (May 7, 2024).
[20] 91 Fed. Reg. 9,088 (Feb. 24, 2026).

With Valmy Units 1 and 2 converted to natural gas, the 2012 MATS rule no longer applies to Nevada Power and Sierra generation operations.

6. Hydrogen Fuel and Carbon Capture

The Companies continue to monitor the availability and commercial application of hydrogen as a fuel source for its generating units and carbon capture technologies for the capture and storage of CO_2. These technologies are not included in the existing or proposed generating units in this filing. The Companies commissioned a review of the status of these technologies, *Carbon Capture & Storage and Hydrogen Fuel Assessment* by *E3*, which is included as Technical Appendix GEN-4 of this filing. At this time, these technologies are not commercially feasible for the Companies' generating fleet, but the Companies will continue to monitor the commercial feasibility of these technologies for their current and future generating units.

B. LONG-TERM POWER PURCHASE AGREEMENTS

The Companies meet customer's energy demand with company-owned and controlled generation, as well as with a combination of long-term power purchase agreements ("PPAs") and short-term energy transactions.

Similarly, the Companies meet the requirements of Nevada's Renewable Portfolio Standard ("RPS") through a combination of company-owned generation, Commission-approved long-term PPAs with renewable energy resources, and agreements for purchase of portfolio energy credits ("PCs").

Figure CON-1 lists all of Nevada Power's renewable and non-renewable long-term PPAs, PC only, and sales agreements. Figure CON-2 lists all of Sierra's renewable and non-renewable long-term PPAs, PC-only, and sales agreements.

FIGURE CON-1

NEVADA POWER'S LONG-TERM POWER PURCHASE AGREEMENTS

Contract Name	Docket Number	Contract Type	Capacity (MW)	Commercial Operation Date	Termination Date	BESS Termination Date
Renewable Purchase Agreements						
PPAs (Commercial)						
ACE Searchlight[QF]	09-08020	Solar[S]	17.5	12/16/14	12/31/2034	
APEX Landfill[QF]	09-08020	Methane	12.0	03/01/12	12/31/2032	
Boulder Solar I[EWG]	15-07003	Solar[S]	100.0	12/09/16	12/31/2036	
Colorado River Commission-Hoover	-	Hydro	237.6	10/01/17	09/30/2067	
Copper Mountain 5[EWG]	18-06003	Solar[S]	250.0	07/23/21	12/31/2046	
Desert Peak 2[QF]	02-11040	Geothermal	25.0	04/17/07	12/31/2027	
Eagle Shadow Mountain[EWG]	18-06003	Solar[S]	300.0	05/10/23	12/31/2048	
FRV Spectrum[QF]	11-03014	Solar[S]	30.0	09/23/13	12/31/2038	
Gemini Solar[EWG]	19-06039	Solar[S,X=380 (3.7 hrs) 3]	690.0	03/25/24	12/31/2049	12/31/2049
Jersey Valley[QF]	06-10021	Geothermal	22.5	08/30/11	12/31/2031	
McGinness Hills[QF]	10-02009	Geothermal	96.0	06/20/12	12/31/2032	
Moapa (Arrow Canyon) Solar[EWG]	19-06039	Solar[S,X=74 (5 hrs) 3]	200.0	12/08/23	12/31/2048	12/31/2048
Mountain View[EWG]	11-03014	Solar[S]	20.0	01/05/14	12/31/2039	
Nevada Solar One (NPC)[QF]	02-11040	Solar[T,X]	46.9	06/27/07	12/31/2027	
NGP Blue Mountain[QF]	06-10021	Geothermal	49.5	11/20/09	12/31/2029	
RV Apex[QF]	10-02009	Solar[S]	20.0	07/21/12	12/31/2037	
Salt Wells[QF]	07-02015	Geothermal	23.6	09/18/09	12/31/2029	
Silver State[EWG]	10-03022	Solar[F]	52.0	04/25/12	12/31/2037	
Spring Valley[EWG]	10-02009	Wind	151.8	08/16/12	12/31/2032	
Stillwater Geothermal[1,QF]	07-02015	Geothermal	47.2	10/10/09	12/31/2029[4]	
Stillwater PV[1,QF]	07-02015	Solar[F]	22.0	03/05/12	12/31/2029[4]	
Switch Station 1[EWG]	15-07003	Solar[S]	100.0	08/08/17	12/31/2037	
Switch Station 2 (NPC)[EWG]	15-11029	Solar[S]	0.0	10/11/17	12/31/2037	
Techren I[EWG]	16-08026	Solar[S]	100.0	03/11/19	12/31/2044	
Techren III[QF]	17-11004	Solar[S]	25.0	10/07/20	12/31/2045	
Techren V[EWG]	18-06003	Solar[S]	50.0	12/31/20	12/31/2045	
Tuscarora[QF]	10-03022	Geothermal	32.0	01/11/12	12/31/2032	
WM Renewable Energy-Lockwood[QF]	10-03022	Methane	3.2	04/01/12	12/31/2032	
		Total	**2723.8**			
PC Purchase Agreements						
Sierra Pacific Power	09-08018 & 09-08020	Geothermal	2.3	10/30/09	12/31/2028	
Nellis I (Solar Star)[QF]	07-01035	Solar	13.2	12/15/07	12/31/2027	
SunPower (LVVWD)	04-11033	Solar	3.0	04/20/06	12/31/2026	
		Total	**18.5**			
PPAs (Pre-Commercial)[2]				**Estimated COD**	**Termination Date**	**BESS Termination Date**
Dry Lake East	24-05041	Solar[S,X=200(4hrs)]	200.0	12/01/26	12/31/2051	12/31/2046
Libra Solar	24-05041	Solar[S,X=700(4hrs)]	700.0	12/01/27	12/31/2052	12/31/2047
		Total	**900.0**			
Non-Renewable Purchase Agreements						
Renewable and Non-Renewable Sales						
Switch NGR (Switch Station 1)	15-08005	NGR Agreement (Sale of PCs)	100.0	08/08/17	12/31/2037	
Switch NGR-NPC (Switch Station 2)	15-11028	NGR Agreement (Sale of PCs)	0.0	10/11/17	12/31/2037	

Notes:
1. The geothermal and solar facilities are combined into one PPA.
2. Facilities are either under development or construction (the dates shown are expected dates).
3. Storage reflects current MW based on annual storage capacity test
4. NPC has an option to extend the Stillwater Geothermal/Solar PPA for a period of 3, 4 or 5 years upon the termination date.
QF=Qualifying Facility, EWG=Exempt Wholesale Generator, S=Single Axis Tracking, T=Solar Thermal (Tracking), F=Fixed Tilt, X=Storage

FIGURE CON-2

SIERRA'S LONG-TERM POWER PURCHASE AGREEMENTS

Contract Name	Docket Number	Contract Type	Capacity (MW)	Commercial Operation Date	Termination Date	BESS Termination Date
Renewable Energy						
PPAs (Commercial)						
Battle Mountain[EWG]	18-06003	Solar[5,X=24.2MW (4 hrs) 6]	101.0	6/23/2021	12/31/2046	12/31/2031
Boulder Solar II[EWG]	15-11029	Solar[5]	50.0	1/27/2017	12/31/2037	
Burdette[QF]	04-08004	Geothermal	26.0	2/28/2006	12/31/2026	
Dodge Flat[EWG]	18-06003	Solar[5,X=50MW (4 hrs) 6]	200.0	3/2/2022	12/31/2047	12/31/2037
Fish Springs Ranch[EWG]	18-06003	Solar[5,X=24.91MW (4 hrs) 6]	100.0	3/15/2022	12/31/2047	12/31/2037
Galena 3[QF]	06-05040	Geothermal	26.5	2/21/2008	12/31/2028	
Hooper[1,QF]	QF-Legacy	Hydro	0.75	6/23/2016	12/31/2040	
Kingston[1]	-	Hydro	0.175	9/19/2011	12/31/2040	
Mill Creek[1]	-	Hydro	0.037	9/1/2011	12/31/2040	
Nevada Solar One (SPPC)[QF]	02-12039	Solar[T]	22.1	6/27/2007	12/31/2027	
North Valley[QF]	22-03024	Geothermal	25	4/26/2023	12/31/2048	
OWGP Beowawe[QF]	22-11032	Geothermal	20.0	1/10/2025	12/31/2053	
RO Ranch[1,2]	-	Hydro	0	3/15/2011	12/31/2040	
Switch Station 2 (SPPC)[EWG]	15-11029	Solar[5]	79.0	10/11/2017	12/31/2037	
Techren II[EWG]	17-02007	Solar[5]	200.0	10/4/2019	12/31/2044	
Techren IV[QF]	17-11003	Solar[5]	25.0	10/7/2020	12/31/2045	
TMWA Fleish	07-01036	Hydro	2.4	5/16/2008	6/1/2028	
TMWA Verdi	07-01036	Hydro	2.4	5/15/2009	6/1/2029	
TMWA Washoe	07-01036	Hydro	2.5	7/25/2008	6/1/2028	
Turquoise[EWG]	17-11003	Solar[F]	50.0	12/4/2020	12/31/2045	
USG San Emidio[QF]	11-08010	Geothermal	11.75	5/25/2012	12/31/2037	
		Total	**944.6**			
PC Purchase Agreement						
TMWRF	06-04030	Methane	0.8	9/9/2005	9/1/2026	
PPAs (Pre-Commercial)[3]				**Estimated COD**	**Termination Date**	
Ormat Western Geothermal Portfolio (OWGP)[5]						
OWGP Pinto[QF]	22-11032	Geothermal	15.0	1/1/2027	12/31/2053	
OWGP Galena 1[QF]	22-11032	Geothermal	15.0	2/1/2027	12/31/2053	
OWGP Desert Peak 2[QF]	22-11032	Geothermal	10.0	2/1/2028	12/31/2053	
OWGP Lone Mountain[QF]	22-11032	Geothermal	15.0	10/1/2028	12/31/2053	
OWGP Galena 3[QF]	22-11032	Geothermal	15.0	1/1/2029	12/31/2053	
OWGP TBD	22-11032	Geothermal	30.0	TBD	12/31/2053	
Corsac Generating Station 2 LLC	24-05041	Geothermal	115.0	2/1/2030	12/31/2045	
		Total	**215.0**			
Storage Only (Pre-Commercial)[3]						
Dodge Flat Energy Storage	25-10028	Solar & Grid Tied BESS [150 MW (4 hrs)]	**0.0**	7/1/2027		12/31/2047
		Total	**0.0**			
Non-Renewable Purchase Agreements						
Liberty (CalPeco) EBSA[7]	09-12002 & 10-07003	Diesel	12.0	1/1/2011	12/31/2031	
		Total	**12.0**			
Renewable & Non-Renewable Sales Agreements						
Liberty (CalPeco)	-	Full Requirements (Capacity/Energy/PCs)	See Note 4	12/30/2020	5/31/2027	
NPC-SPPC	09-08018 & 09-08020	Sale of PCs (Geothermal)	2.3	10/30/2009	12/31/2028	
Apple NGR (Fort Churchill Solar)	13-07002	NGR Agreement (Sale of PCs)	19.5	8/5/2015	8/4/2040	
Apple NGR (Boulder Solar II)	15-11025	NGR Agreement (Sale of PCs)	50.0	1/27/2017	12/31/2037	
Switch NGR-SPPC (Switch Station 2)	15-11025	NGR Agreement (Sale of PCs)	79.0	10/11/2017	12/31/2037	
Apple NGR (Techren II)	17-02008	NGR Agreement (Sale of PCs)	200.0	10/4/2019	6/20/2044	
Apple NGR (Turquoise)	17-11002	NGR Agreement (Sale of PCs)	50.0	12/4/2020	4/30/2045	

Notes:
1. The illustrative termination date shown is subject to certain conditions, which may result in termination before or after December 31, 2040.
2. RO Ranch Hydro facility is shut down indefinitely (the PPA is still active).
3. Facilities are either under development or construction (the dates shown are expected dates).
4. The current monthly contract demand ranges from approximately 70 MW (June) to 140 MW (December). Contract extension pending FERC approval.
5. Portfolio consists of multiple facilites under one Power Purchase Agreement
6. Storage reflects current MW based on annual storage capacity test
7. Emergency backup service agreement for King's Beach Diesels

QF=Qualifying Facility, EWG=Exempt Wholesale Generator, S=Single Axis Tracking, T=Solar Thermal (Tracking), F=Fixed Tilt, X=Storage

1. RENEWABLE PPAs

Nevada Power has executed twenty-seven long-term renewable PPAs representing a total nameplate capacity of approximately 2,723.8 MW (see Figure CON-1 above). Projects in development include Dry Lake East with an estimated commercial operations date ("COD") of December 1, 2026, and Libra Solar with an estimated COD of December 1, 2027. Nevada Power has three PC-only purchase agreements as represented in CON-1. Nevada Power's renewable PPAs secure a renewable energy portfolio that is a mix of solar, geothermal, hydro, methane, and wind resources.

Sierra has executed twenty-one long-term renewable PPAs, representing a total nameplate capacity of approximately 944.6 MW (see Figure CON-2 above). The latest commercial addition to the portfolio is the Ormat Western Geothermal Portfolio's Beowawe project, added in January 2025. Projects in development include other Ormat Western Geothermal Portfolio projects with contractual CODs of January 2027 through January 2029, Corsac Generating Station 2, with an estimated COD of February 1, 2030, and Dodge Flat BESS Addition, with an estimated COD of July 1, 2027. Sierra has executed one long-term PC-only purchase agreement, as represented in Figure CON-2. Sierra's renewable PPAs secure a renewable energy portfolio that is made up of a mix of solar, geothermal, and hydro resources.

Additional information regarding both Nevada Power's and Sierra's portfolio of renewable energy PPAs is set forth below.

2. NON-RENEWABLE PPAs

Figure CON-2 (above) also lists non-renewable PPAs at Sierra. Sierra has executed one long-term non-renewable agreement with Liberty Utilities ("Liberty"), pursuant to which Sierra purchases 12 MW of capacity from Liberty's Kings Beach diesel units for emergency backup service purposes. This agreement expires December 31, 2031. Nevada Power has no non-renewable PPAs, as shown in Figure CON-1.

3. RENEWABLE AND NON-RENEWABLE SALES AGREEMENTS

Also listed in Figures CON-1 and CON-2 are long-term renewable and non-renewable sales agreements, pursuant to which Nevada Power and Sierra sell either energy, PCs, or both, to third parties.

Nevada Power currently has NV GreenEnergy Rider ("NGR") agreements pursuant to which it sells PCs to Switch Ltd. (associated with the full output of the Switch Station 1 solar facility).

Sierra has executed long-term agreements under the NGR program for the sale of PCs to Apple (associated with the full output of the Fort Churchill Solar Array, Boulder Solar II project, Techren Solar II project, and the Turquoise Solar project) and an agreement with Switch Ltd.

(associated with the full output of the Switch Station 2 project). Sierra has also executed one long-term agreement for the sale of PCs to Nevada Power. This PC-only sale agreement expires December 31, 2028. In addition, Sierra has executed a full requirements agreement with Liberty whereby Sierra sells capacity, energy, and certain PCs to meet the needs of Liberty retail customers in California. The current monthly contract demand ranges from approximately 70 MW (June) to 140 MW (December). The agreement commenced December 30, 2020, and terminates on the latter of May 31, 2027, or upon the completion of facilities that will provide Liberty with sufficient capacity to transition to taking Network Integration Transmission Service for its entire Network Load pursuant to its executed Network Integration Transmission Service Agreement.[1]

[1] Third amended and restated service agreement between Sierra Pacific Power Company and Liberty Utilities LLC, executed on October 31, 2025, filed in FERC Docket No. ER26-534-000.

C. FUEL SUPPLY

1. CURRENT PHYSICAL GAS SUPPLY AND PROPOSED PIPELINE EXPANSION

The Companies are well poised to access the supply basins serving the Pacific Northwest and the Desert Southwest per their firm gas transportation assets. These basins are the Rocky Mountain Basin, the Permian Basin, the San Juan Basin, British Columbia, Western Canada Sedimentary Basins, as well as California gas supply. The gas transportation facilities that are available to move gas from the supply basins to the Companies' respective service territories are shown in Figures GAS-1 and GAS-2.

Nevada Power takes delivery of natural gas from interstate pipeline Kern River, which connects with several major gas producing regions including the Permian, San Juan, and the Rocky Mountain supply basins, as well as California gas supply. The largest producing region with the best connectivity into and through Nevada Power's service territory is the Rocky Mountain supply basin.

Sierra takes delivery of natural gas from three interstate pipelines: Great Basin, Tuscarora, and Ruby Pipeline ("Ruby"). Great Basin receives gas supplies upstream from Northwest Pipeline ("NWPL"), which sources its gas supplies from British Columbia, the San Juan Basin, and the Rocky Mountain region of Wyoming, Utah and Colorado. Tuscarora receives gas supplies from Gas Transmission Northwest ("GTN") pipeline, near Malin, Oregon, which is connected to the gas producing regions of Western Canada Sedimentary Basin Alberta through TC Energy's system. The gas supply source for Malin gas is predominantly in Alberta, Canada. TC Energy's Alberta pipeline system carries gas from the Alberta Energy Company ("AECO") producing areas to the Alberta/British Columbia border. There, TC Energy's Alberta system interconnects with TC Energy's Foothills system, which transports gas to TC Energy's GTN system at the U.S./Canadian border near Kingsgate, Idaho. Toward the end of 2025, Sierra began taking firm transportation from Ruby to serve Valmy.

FIGURE GAS-1
NEVADA POWER PIPELINE ROUTES

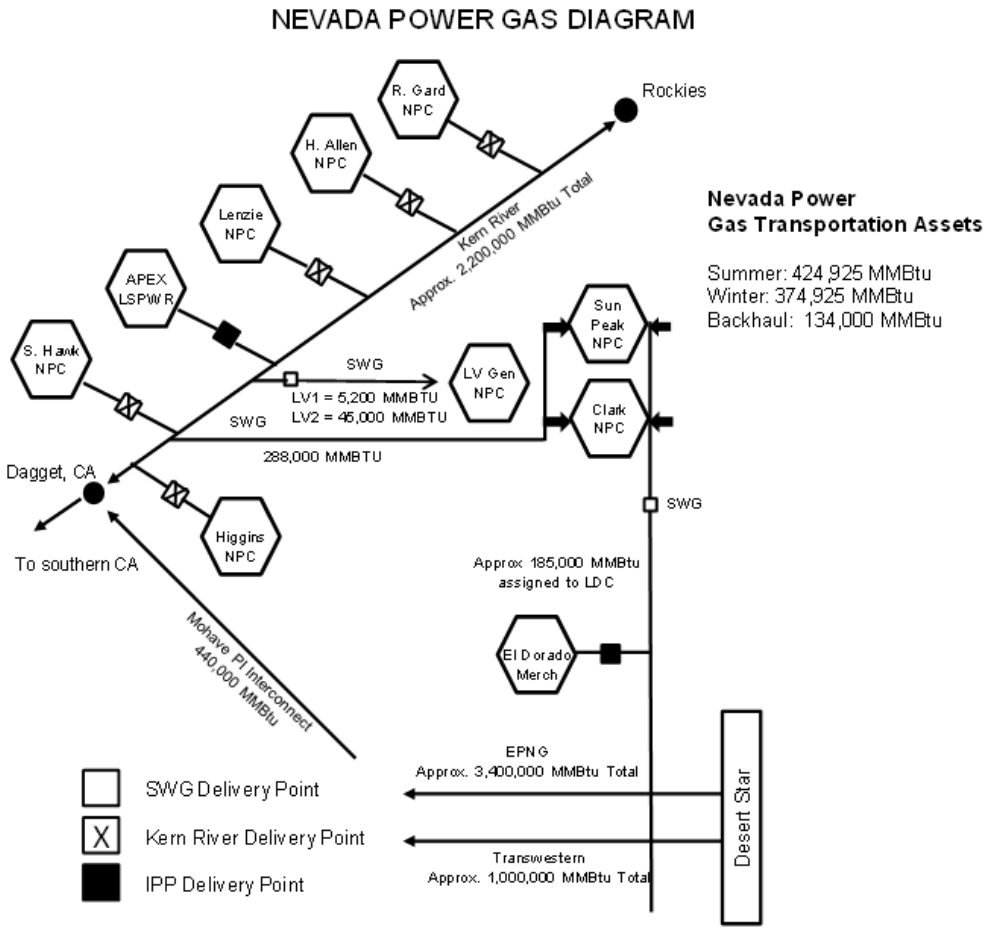

FIGURE GAS-2
SIERRA PIPELINE ROUTES

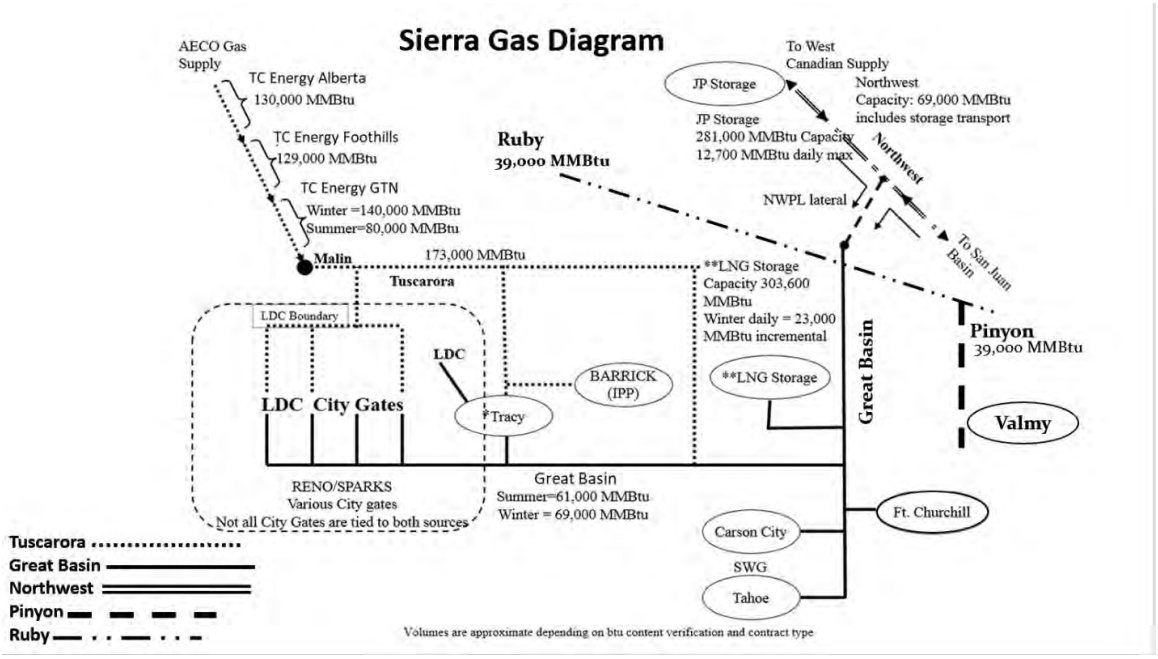

Figures GAS-3 and GAS-4 list Nevada Power's and Sierra's existing gas transportation service agreements, respectively.

FIGURE GAS-3
NEVADA POWER NATURAL GAS TRANSPORTATION CONTRACTS

Nevada Power Company d/b/a NV Energy
Gas Transportation Agreements

Contract Type	Counterparty	Contract #	Termination Date (as of 2/1/2026)	Maximum Daily Quantity (MMBTUs) Annual	Winter	Summer	Comments
TSA	Kern River	20027	4/30/2028	75,000			
TSA	Kern River	20028	4/30/2028			50,000	
TSA	Kern River	20023	4/30/2032	12,500			
TSA	Kern River	20012	9/30/2031	10,350			
TSA	Kern River	20013	9/30/2031	11,075			
TSA	Kern River	1830	9/30/2031	266,000			Forward haul
TSA	Kern River	1617	9/30/2031	134,000			Back haul
Facilities	Kern River	Higgins Facility Charge	12/31/2039				No Volume
TSA	SW Gas	21016	4/30/2027	288,000			
TSA	SW Gas	21011	Month to Month			5,200	
TSA	SW Gas	21088	7/31/2027	45,000			

Nevada Power currently holds year-round contracts for firm forward haul gas transportation rights on Kern River totalling 374,925 MMBtu/day, with an additional 50,000 MMBtu/day in the summer that increases the maximum daily quantity to 424,925 MMBtu/day from April through October to serve most of its overall daily natural gas needs. Nevada Power holds rollover rights under the Kern River tariff, provided Nevada Power is willing to continue under the terms and conditions specified therein. In addition, Nevada Power has a long-term agreement with Kern River for back haul capacity of 134,000 MMBtu/day. Nevada Power may procure Topock-sourced gas for re-delivery into Kern River at Daggett, California.

Gas supplies for Nevada Power's Harry Allen, Chuck Lenzie, Higgins and Silverhawk plants are delivered directly by Kern River. The gas-fired units at Clark Generating Station and Sun Peak Generating Station receive gas delivered under a 288,000 MMBtu/day transportation service agreement with Southwest Gas Corporation ("Southwest"). The transportation agreement with Southwest provides for receipt of Kern River supplies, as well as limited quantities of gas from sellers off the El Paso Natural Gas Company ("El Paso") and/or Transwestern Pipeline Company ("Transwestern") pipelines south of Las Vegas (if Southwest is not using its capacity rights to serve its own requirements). As part of the acquisition of Las Vegas Generating Station in 2014, Nevada Power retained the gas transportation service agreements (LV Station Unit 1 45,000 MMBtu/day and LV Station Unit 2 5,200 MMBtu/day) with Southwest.

Nevada Power meets at least once a year with Kern River to review the prior year's operations, discuss upcoming maintenance plans, and review potential expansions. The last meeting with Kern River was on May 26, 2025. The next meeting is scheduled for May 26, 2026.

Nevada Power is seeking approval to maintain its current natural gas transportation portfolio through the Companies' Energy Supply Plan. Nevada Power's daily gas usage requirements during July and August exceed the current contracted capacity with Kern River. Nevada Power has adequately closed prior firm gas transportation open positions by purchasing delivered natural gas and proposes to continue this strategy. Nevada Power will continue to evaluate whether there is a need to acquire new firm transportation capacity and may revisit this strategy in a future filing. Alternatively, the Companies may evaluate the possibility of deviating from an approved ESP or ESP update "to the extent necessary to respond adequately to any significant change in circumstances not contemplated by the energy supply plan" pursuant to NAC § 704.9504, should conditions warrant such an action.

FIGURE GAS-4
SIERRA NATURAL GAS TRANSPORTATION CONTRACTS

Sierra Pacific Power Company d/b/a NV Energy
Gas Transportation and Storage Agreements

Contract Type	Counterparty	Contract #	Termination Date (as of 4/1/2026)	Units	Maximum Daily Quantity Annual	Winter	Summer
TSA							
	TC Energy - Alberta System						
		2010-447962	10/31/2027	GJ/Day	18,583		
		2010-447963	10/31/2027	GJ/Day	92,918		
		2010-447964	10/31/2027	GJ/Day	25,993		
					137,494		
	TC Energy - Foothills System						
		SIER - 9976	10/31/2027	GJ/Day	32,444		
		SIER - 9987	10/31/2027	GJ/Day	2,143		
		SIER - 9988	10/31/2027	GJ/Day	5,572		
		SIER - 9994	10/31/2027	GJ/Day	16,220		
		SIER - 9999	10/31/2027	GJ/Day	10,920		
		SIER - 10009	10/31/2027	GJ/Day	866		
		SIER - 9991	10/31/2027	GJ/Day	26,233		
		SIER - 10000	10/31/2027	GJ/Day	10,000		
		SIER - 10001	10/31/2027	GJ/Day	15,826		
		SIER - 10002	10/31/2027	GJ/Day	15,807		
					136,031		
	TC Energy - GTN						
		F-02842	10/31/2029	MMBTU/Day		60,000	30,000
		F-02843	10/31/2029	MMBTU/Day		20,270	10,000
		F-07027	4/30/2031	MMBTU/Day		20,000	
		F-07328	10/31/2029	MMBTU/Day	14,000		
		F-07370	10/31/2035	MMBTU/Day	15,000		
		F-07371	10/31/2035	MMBTU/Day	10,099		
		F-07567	10/31/2035	MMBTU/Day	800		
					39,899	100,270	40,000
	Northwest Pipeline						
		10046	6/30/2026	MMBTU/Day	59,696		
		10061	3/31/2027	MMBTU/Day	9,000		
					68,696		
	Great Basin Gas Transmission						
		F-29	11/30/2029	MMBTU/Day		68,696	61,044
		F-32	3/31/2030	MMBTU/Day		23,000	
						91,696	61,044
	Tallgrass Energy - Ruby Pipeline						
		961921	12/31/2049	MMBTU/Day	39,000		
	Tallgrass Energy - Pinyon Pipeline						
		962402	12/31/2049	MMBTU/Day	39,000		
	TC Energy - Tuscarora						
		F001	12/31/2032	MMBTU/Day	105,750		
		F019	12/31/2032	MMBTU/Day	10,000		
		F024	12/31/2032	MMBTU/Day	5,661		
		F025	12/31/2032	MMBTU/Day	5,690		
		F030	12/31/2032	MMBTU/Day	5,722		
		F097	9/30/2030	MMBTU/Day	40,000		
		369	9/30/2030	MMBTU/Day	760		
					173,583		
Storage							
	Northwest Pipeline						
		126544 Storage Capacity	3/31/2046	MMBTU	281,242		
		126544 Storage Withdraw	3/31/2046	MMBTU/Day	12,687		
	Great Basin Gas Transmission						
		S-6 LNG Stor Cap	3/31/2030	MMBTU	303,604		
		S-6 LNG Daily Del Cap	3/31/2030	MMBTU/Day		23,000	

Sierra has storage assets along both Great Basin and NWPL. The NWPL storage is located at the Jackson Prairie facility and allows for unlimited injection/withdrawal cycles subject to then-current mainline pipeline operating conditions. Sierra's total firm storage rights at Jackson Prairie are just over 281,000 MMBtu and come with about 12,600 MMBtu of firm daily injection/withdrawal rights. Additionally, Sierra will evaluate opportunities to enter into an asset management agreement with an energy management company to further optimize these assets.

Sierra similarly holds rights on Great Basin of approximately 304,000 MMBtu of LNG storage capacity that comes with up to 23,000 MMBtu of firm daily withdrawal rights, including firm transport to the LDC service territory; however, the LNG supply is only available during the winter season.

Gas Transportation into Tuscarora. In Canada, Sierra currently holds year-round firm transportation contracts on TC Energy's Alberta system totaling 130,218 MMBtu/day.[1] Downstream from TC Energy Alberta, Sierra holds year-round firm transportation contracts on TC Energy's Foothills system totaling 128,883 MMBtu/day. Downstream from TC Energy Foothills, Sierra holds both year-round and seasonal firm transportation contracts on TC Energy's GTN pipeline for 80,000 MMBtu/day and 140,000 MMBtu/day, respectively. Sierra holds 173,583 MMBtu/day of year-round firm transportation contracts on TC Energy – Tuscarora.

Gas Transportation into Great Basin. Sierra holds year-round firm transportation contracts on Northwest Pipeline totaling 68,696 MMBtu/day. On Great Basin, Sierra holds seasonal firm transportation contracts. The winter totals 91,696 MMBtu/day and the summer totals 61,044 MMBtu/day.

Gas Transportation to Valmy. Sierra holds a one-year-round firm transportation contract on Ruby Pipeline with a maximum daily quantity of 39,000 MMBtu/day. Sierra also holds a year-round firm transportation contract on Pinyon Pipeline with a maximum daily quantity of 39,000 MMBtu/day. Both contracts became effective January 7, 2026.

Sierra meets at least once a year with all the interstate pipeline companies from which it purchases firm transportation service. The intent of the meetings is to review the prior year's operations, discuss upcoming maintenance plans, and review potential expansions. Storage projects are included in discussions with both NWPL and Great Basin.

Many of Sierra's contracts have evergreen clauses and can be renewed for successive one-year extension periods. Given the results of the PLEXOS ST analysis described in Section 2.E of the 2026 Energy Supply Plan and the requirement in NAC § 704.9099(3) to maximize the reliability

[1] Generally, Canadian and international contracts specify capacity in terms of gigajoules of energy delivered per day or GJ/day. Sierra's TC Alberta contracts total 137,494 GJ/day. One GJ is equal to 0.94708 MMBtu.

of fuel supply over the term of the energy supply plan, Sierra proposes to continue to renew these contracts on an annual basis in order to ensure firm deliveries of gas supplies. The existing contracts subject to renewal are shown in Figure GAS-4.

The Companies' natural gas transportation strategy is designed to maintain reliable fuel supply for existing operations while supporting future generation needs under the Preferred Plan. Nevada Power seeks approval to maintain its current transportation portfolio and continue relying on delivered natural gas transactions to manage periodic capacity shortfalls, particularly during peak summer periods. Sierra similarly seeks to maintain its existing portfolio, which has historically been sufficient under normal conditions, while recognizing that load growth and extreme weather scenarios may result in the system running at or near maximum capacity.

Gas Transportation Expansion to Fort Churchill

The Companies require a pipeline expansion and additional transport capacity to support the Companies' Preferred Plan. The Preferred Plan includes the addition of approximately 1,223 MW of new natural gas generation at Fort Churchill between 2030 and 2032, requiring approximately 275,000 MMBtu per day of incremental natural gas supply. The Companies determined that existing pipeline capacity is fully subscribed and insufficient to support new gas-fired generation at Fort Churchill, necessitating a new pipeline expansion to the site.

Accordingly, the Companies engaged the three interstate pipelines in closest proximity to Fort Churchill - Great Basin Gas Transmission ("Great Basin"), TC Energy, and Tallgrass Energy to evaluate pipeline expansion options. Great Basin currently owns Great Basin Pipeline that serves the Fort Churchill generation site and Sierra's local distribution company. TC Energy owns the Tuscarora Pipeline, which currently serves Sierra's Tracy generation site, Fort Churchill generation site, and Sierra's local distribution company. Tallgrass Energy owns the Ruby Pipeline and Pinyon Pipeline, which currently serves Sierra's Valmy generation site. All three pipelines proposed similar solutions involving new pipeline infrastructure interconnecting to the Ruby Pipeline, which has access to gas supply in the Rocky Mountains. Following a formal solicitation and evaluation process, which requested the three pipelines provide proposals on a pipeline expansion and requested that Tallgrass provide pricing on upstream capacity on the Ruby Pipeline, Sierra selected Great Basin for the pipeline expansion based on its ability to meet all technical and commercial requirements at the lowest overall transportation cost.

2. PHYSICAL GAS PROCUREMENT

The Companies employ a four-season laddering strategy for physical gas purchases, in which 25 percent of projected monthly gas requirements per season are procured, subject to the availability

REDACTED PUBLIC VERSION

of conforming bids and the willingness of suppliers to accept reasonable commercial terms. Physical gas volumes are to be procured at indexed prices, currently subject to a cap of $ per MMBtu on the premium. This cap could be exceeded with prior approval from the Risk Committee; however, if the Companies exceed the premium cap and the procured gas which exceeded the premium cap is not the least cost supply alternative, the Companies will provide written notice to the Regulatory Operations Staff and the Bureau of Consumer Protection indicating such. As described in the Joint ESP filing, the Companies are proposing to continue to follow the physical gas procurement strategy reviewed and approved in Docket No. 09-07003 with a request to remove the physical premium cap. Targeted physical gas volumes will exclude any potential gas-fired generation to meet forward sales; gas needed to meet forward sales in only procured through short-term purchases. Figure GAS-5 reflects the planned implementation schedule for the physical gas acquisition strategy.

FIGURE GAS-5
PHYSICAL GAS ACQUISITION STRATEGY

	Delivery								
Incremental Transaction	Winter '25 '26	Summer '26	Winter '26 '27	Summer '27	Winter '27 '28	Summer '28	Winter '28 '29	Summer '29	Winter '29 '30
Q3 '25	25%	25%	25%	25%					
Q1 '26		25%	25%	25%	25%				
Q3 '26			25%	25%	25%	25%			
Q1 '27				25%	25%	25%	25%		
Q3 '27					25%	25%	25%	25%	
Q1 '28						25%	25%	25%	25%
Sum	100%	100%	100%	100%	100%	100%	75%	50%	25%

3. EMERGENCY SUPPLIES

Sierra's LDC operations rely on gas supply delivered through interstate pipelines to meet LDC customer requirements. During extreme cold weather events or during a force majeure event on an interstate pipeline, gas supply scheduled to Sierra's gas-fired electric generating plants may be diverted to support LDC gas supply operations, thereby limiting the availability of natural gas supply to meet electric generation requirements. In these infrequent situations, Sierra relies primarily on energy supplies dispatched from Nevada Power generating units and delivered from south to north using the ON Line. In addition, two of Sierra's generating units, Clark Mountain 3 and 4, are peaking units capable of burning diesel. Sierra maintains diesel inventories at the Clark Mountain facility that can be called upon as an alternate fuel during emergency events only, allowing the use of existing pipeline transportation capacity to support peak LDC use. The Clark Mountain facility does not store diesel fuel onsite; however, the Reno/Sparks oil terminal is within

10 miles of the Clark Mountain generating units and any required diesel can be supplied on short notice, even during the winter months. Diesel use is anticipated to be minimal, if at all, in each year in the planning period. Diesel inventory replacement is procured, if necessary, utilizing current diesel specifications required ensuring compliance with any operating permit(s) or applicable rule requirements and following internal Corporate Purchasing Policies and Procedures.

D. RENEWABLES

A. Introduction

In this 2026 Joint IRP, the Companies seek approval of 23 PPAs adding a total combined capacity increase consisting of approximately 4,550 MW of renewable generation capacity and 5,405 MW of battery energy storage systems ("BESS") output capacity in both the Nevada Power and the Sierra systems. The projects for which approval is requested in this Renewables Section of the 2026 Joint IRP's Supply Plan[1] consist exclusively of third-party contracted resources.[2]

The Companies continue to plan and execute to meet the RPS of 50 percent by 2030 and Nevada's goal for an amount of energy production from zero-carbon dioxide emission resources equal to total electricity sales in 2050. In addition, load growth and customer demand for renewable energy have increased and are anticipated to continue to increase in Nevada. Further, constricted available capacity in the West poses a challenge to relying on market purchases to serve load, particularly in Sierra's import-constrained system. Finally, while the Companies' 2024 All-Source Request for Proposals ("2024 RFP") solicited energy from all generating sources, including renewables (i.e., solar, geothermal, wind, hydroelectric, biomass, and biogas technologies), BESS, and conventional/fossil, including Western Systems Power Pool ("WSPP") offers, the pipeline of shovel-ready projects bid into the Companies' 2024 RFP resoundingly consisted of renewable energy or BESS projects, signaling that renewables are effectively the only viable new energy and storage resource options available to contract in the market at this time.[3]

While the Companies continue to evaluate all utility-owned and contractual options for renewable projects, no APAs involving the Companies as the purchaser or Company-development resources are being brought forward for approval in this filing. The following narrative addresses PPAs that are being sought for approval to serve customer loads,[4] either non-customer-specific bundled loads or new customer-specific loads related to sleeved PPAs associated with customer agreements,

[1] The 2026 Joint IRP's Supply Plan contains various sections. The Renewables Section is formally part of the Supply Plan. The Renewables Section is further subdivided into parts titled with capital letters and arranged in alphabetical order.
[2] Contracted resources generally refer in this narrative to those resources the Companies contract through a PPA with third-party developers to serve customer loads, as differentiated from resources, such as Dry Lake Solar, the Companies contract through a PPA with a Company utility-affiliate to serve the Companies' native loads, or resource assets the Companies acquires through an asset purchase agreement ("APA") from third-party developers to own and serve the Companies' native loads.
[3] See Part B (2024 All Source Request for Proposal) for an explanation of the 2024 RFP.
[4] The PPAs proposed for approval are intended to serve the Companies' non-customer-specific, native load customers, except for the four PPAs intended to serve loads of new large customers under customer agreements, including the proposed Large Load Electric Service Agreement ("LLESA") and the Clean Transition Tariff ("CTT"). Both the non-customer-specific PPAs to serve native load customers and the customer-specific PPAs associated with customer agreements, including the proposed LLESA and the CTT, involve bundled service.

including LLESA and CTT agreements.[5] Some of these resources, as described in the Economic Analysis Section of the Supply Plan, also help to mitigate a reliability concern for Sierra starting in the Summer of 2027.

This Renewables Section also includes updates related to existing renewable and storage resources in the Companies' portfolio, the RPS outlook, a discussion of named placeholders in the Companies' long-term planning model, a discussion of renewable and storage candidate resources including price forecast and current assumptions around future tax credit applicability, and jobs benefits for the proposed resources, as well as informational updates.

A. 2024 All Source Request for Proposal

The Companies launched the 2024 RFP in November 2024, with the intent of securing proposals for the acquisition of long-term dispatchable energy and energy storage resources to support various objectives including system needs and RPS compliance. The 2024 RFP also solicited proposals to develop the Companies' Amargosa Solar project, as well as the Sierra Solar Phase II project. These projects are discussed further below. The protocol for the 2024 RFP specified participation and bid requirements, including a minimum project size of 20 MW and a commercial operation date ("COD") on or before December 31, 2030, with exceptions to be considered on a case-by-case basis.[6] The Companies received 198 total bids in the 2024 RFP, more than double the amount received in the Companies' 2023 Open Resource RFP. While many of the bids represented iterative variations for the same project, a total of 73 unique project sites were proposed from 34 counterparties. The bids represented nearly 15 gigawatts ("GW") of generating resources and over 21 GW of storage, from multiple technologies including geothermal, photovoltaic ("PV") solar, wind, conventional thermal generation, and energy storage systems.

When the 2024 RFP concluded in February 2026, it had spanned a dynamic period that presented several unprecedented challenges. Notably, a change in the U.S. presidential administration quickly resulted in regulatory reversal of federal energy policy[7] and introduced much uncertainty to the future of the renewable energy tax credits. In anticipation of the uncertainty, in April 2025, the Companies collected updated bids that reflected the assumption that no tax credits are available

[5] LLESA refers to a proposed electricity service contract template for data centers that exceed 25 MW in maximum demand. For an explanation of the LLESA, see Direct Testimony of Janet Wells submitted on behalf of the Companies accompanying the Triennial 2026 Joint Integrated Resource Plan application.

[6] NV Energy 2024 All Source RFP Protocol, December 11, 2024, available at https://www.nvenergy.com/publish/content/dam/nvenergy/brochures_arch/about-nvenergy/doing-business-with-us/energy-supply-rfps/2024-AS-RFP-Protocol-rev-1.pdf

[7] The White House, *Temporary Withdrawal of All Areas on the Outer Continental Shelf from Offshore Wind Leasing and Review of the Federal Government's Leasing and Permitting Practices for Wind Projects*, January 20, 2025, available at https://www.whitehouse.gov/presidential-actions/2025/01/temporary-withdrawal-of-all-areas-on-the-outer-continental-shelf-from-offshore-wind-leasing-and-review-of-the-federal-governments-leasing-and-permitting-practices-for-wind-projects/

to proposed projects, dubbed "cap pricing," and communicated new contract terms allowing for a price adjustment in order to maintain deliverability should a project later be determined to be ineligible for the tax credits. The passage of the One Big Beautiful Bill Act ("OBBBA") on July 4, 2025, provided some clarity on tax credit eligibility for both renewable and storage resources, and, in August 2025, additional U.S. Internal Revenue Service ("IRS") guidance further clarified the timelines around project start of construction and commercial operation dates as it related to tax credit eligibility as further detailed in Part F below. While the clarity on tax credit eligibility reduced some pricing uncertainty, the issuance of the July 15, 2025, U.S. Department of Interior ("DOI") memorandum setting the new DOI review policy ("DOI Review Policy Memorandum"),[8] introduced new uncertainty in project deliverability that changed the risk profile for all solar projects requiring authorizations from entities under the DOI. The DOI Review Policy Memorandum requires all decisions pertaining to wind and solar projects to be routed through three layers of federal review, and provides no defined timeline, process, or certainty of outcome. Because the vast majority of solar project proposals in the 2024 RFP have some federal nexus requiring authorization that is subject to the new DOI Review Policy Memorandum, the effect of the uncertainty in approval schedule created by the DOI Review Policy Memorandum complicated the evaluation of viable solar and storage project proposals bid into the 2024 RFP.

Historically, RFP selection criteria have been based on ranking and scoring of various project categories including pricing, non-pricing, and economic benefits, as defined in the RFP protocol. Accordingly, the 2024 RFP's original selection criteria included the following factors: (1) Status and timing of interconnection and feasibility of available transmission capacity on the timeline of the project's intended COD; (2) Evaluation of site control; (3) Status of material permits; (4) Review of material equipment for bankability and performance; (5) Determination of whether the project development milestone schedule supports contractual COD; (6) Scope and extent of material exceptions to the pro forma agreement—particularly for revisions to terms that shift risk from the developer to the Companies' customers such as by granting relief to project underperformance and/or excused delays to critical project milestones; (7) Evaluation of development and operating experience of the developer; (8) Evaluation of the developer's financial capability; (9) Evaluation of developer's jobsite safety performance history; (10) Evaluation of the available water supply; and (11) Levelized Cost of Energy ("LCOE") or Levelized Cost of Storage ("LCOS") price evaluation. However, the July 2025 shift in DOI policy, late into the 2024 RFP's bid evaluation process, undermined the viability of most completed project evaluations based on the original selection criteria. Therefore, the Companies adapted the 2024 RFP evaluation and selection criteria to focus on attributes that would reasonably best position a project for delivery

[8] United States Department of the Interior, *Memorandum,* July 15, 2025, available at https://www.doi.gov/media/document/departmental-review-procedures-decisions-actions-consultations-and-other. For more explanation on the DOI Review Policy Memorandum, see Part F. Renewable and Storage Candidate Resource Pricing Outlook.

assurance. When considering the unknown permit approval timelines caused by the DOI Review Policy Memorandum alongside the change in law regarding renewable energy tax credit eligibility, a significant delay in project COD due to federal permitting bottlenecks could disqualify a project from being able to claim the solar tax credits. Thus, projects not subject to the DOI Review Policy Memorandum process present superior value in terms of both tax credit eligibility (i.e., price certainty) and delivery assurance in terms of feasibility of permitting schedule (i.e., COD). In parallel, a reliability need was identified for resources in Sierra's system in the near term, as described in the Economic Analysis. The Companies thus prioritized proposals for projects located on private land, or otherwise not subject to the DOI Review Policy Memorandum (e.g., geothermal and standalone storage), and that were also located in Sierra's system and could achieve commercial operation in the near term. Given the limited number of such projects available and the need for more energy and capacity (including renewable energy), the Companies secondarily prioritized solar and storage projects sited on private land with minimal federal nexus (e.g., access road, and generation tie lines) to minimize permitting review scope and timeline subject to the DOI Review Policy Memorandum and thereby mitigate project deliverability risk. Additional projects were selected on the basis that they supported a specific near-term need identified by the Companies, particularly in northern Nevada as discussed in the Economic Analysis, provided that they were also otherwise deemed viable based on the Companies' due diligence review.

The Companies also reached out to all 2024 RFP bidders with viable proposals to canvass the strategies implemented for each of the project bids to maximize tax credit eligibility. As discussed further below, the IRS has issued guidance clarifying the project activities deemed to mark the start of construction for projects seeking to claim tax credits, such that those projects meeting the start of construction test are "safe harbored" under the laws and guidance in effect as of that date. A compelling safe harbor strategy, such as one involving having executed agreements for offsite manufacturing of major equipment for the project, may result in greater price certainty stemming from tax credit ineligibility risk mitigation, and, therefore, greater delivery assurance. Thus, the responses from bidders regarding their project-specific safe harbor activities were also a factor considered in selecting the final shortlist for contract negotiations.

Recognizing the unique challenges that renewable energy and storage projects are facing due to current market conditions and federal policies, the Companies worked closely with developers to craft numerous creative solutions in the agreements to mitigate risk of project non-delivery. These measures included providing limited relief for delays associated with local county land use permitting authorization—which has increasingly subjected solar development to moratoriums and ordinances that introduce restrictive setback requirements—as well as extending limited relief for delays associated with contingent facilities required to interconnect with the transmission system. This approach to drive sustainable energy procurement through collaboration and innovation ensured a balanced outcome of delivery assurance and customer protection against non-

delivery. The Companies executed 16 PPAs[9] born out of the 2024 RFP, which is 13 more PPAs than the three PPAs the Companies presented in the Companies' Triennial 2024 Joint Integrated Resource Plan ("2024 Joint IRP") (Docket No. 24-05041) that were born out of the previous 2023 Open Resource RFP ("2023 RFP"). The significant increase in the number of executed PPAs demonstrates the 2024 RFP's remarkably successful procurement process.

Many viable projects were not brought forward in this filing for various reasons, including insufficient time to complete comprehensive due diligence reviews and/or commercial negotiations in time to meet this filing date. However, these and other available projects will continue to remain candidates for future filings and will be evaluated as part of subsequent RFPs and bilateral discussions as dictated by the needs of the Companies' and its customers.

A summary of the bid scores, including the Companies' calculated LCOE or LCOS, as applicable, is presented in Confidential Technical Appendix REN-26.

B. Company-Owned Renewables

The Companies are not submitting any Company-owned renewable projects in this filing. The decision to propose PPAs for renewables rather than pursue Company-owned renewables in this filing stems in part from the advantages brought by diversified procurement pathways including shovel-ready projects and the reallocation of risks through renewable PPAs (at this time a large number of renewable projects must be developed within overlapping timeframes while facing heightened regulatory scrutiny of and reduced support for renewables by the federal administration) and in part to continue enabling the Companies' prudent and efficient capital deployment for all previously approved Company-owned projects and for new Company-owned projects other than renewables proposed in this 2026 Joint IRP. While the Companies are diligently pursuing the development of the Sierra Solar Phase 1 project ("Sierra Solar"), the Companies continue to evaluate the impact of the Commission's orders on Sierra Solar and on future Company-owned renewable projects. The Companies will continue to evaluate submitting Company-owned renewable projects in future IRPs as an integral part of their ongoing effort to strive for a balanced portfolio that benefits customers and meets reliability and policy needs.

C. Power Purchase Agreements

The 2026 Joint IRP includes PPAs sourced from several procurement methods to advance renewable projects, including RFP solicitations, bilateral negotiations, and projects brought forward by large customers in conjunction with Energy Supply Agreements ("ESAs") through sleeved PPAs. Sixteen of the twenty-three PPAs were selected from the Companies' 2024 RFP

[9] The Amargosa Energy Center, Southern Bighorn 1 & 2, and Winston Solar projects were each contracted under two PPAs.

process, three were selected bilaterally, and four were brought forth in conjunction with ESAs. The PPAs born from the 2024 RFP and the Companies' bilateral negotiations will provide power and portfolio credits ("PCs") to serve the Companies' non-customer-specific bundled load, whereas 100 percent of the power and PCs from sleeved PPAs associated with customer energy agreements, including LLESA, will be assigned to specific customers.

The Companies seek approval for 19 non-customer-specific bundled-load PPAs and four customer-specific PPAs under the proposed sleeved projects associated with customer energy agreements, including LLESAs. The 19 non-customer-specific bundled-load PPAs represent 16 projects that are comprised of 3,770 MW of solar PV and 4,805 MW of BESS output capacity, 30 MW of geothermal energy, and the four sleeved PPAs associated with customer agreements representing 600 MW of PV energy and 600 MW of BESS output capacity, and 150 MW of geothermal energy, as shown in Table REN-1 below. The "Origination" column in Table REN-1 identifies whether a project is a result of the 2024 RFP, bilateral negotiations or a sleeved project.

TABLE REN-1

Project Name	Origination[1]	Technology[2]	Capacity (MW)	Expected Commercial Operation	Term (Years)	PPA Price ($/MWh)	BESS Price ($/MW-month)	LCOE/ LCOS ($/MWh)[3]
Amargosa Energy Center[4]	2024 RFP	PV and BESS	1200	12/31/2030	25 PV, 20 BESS	$68.47	$12,340	$ 130.76
Boulder Solar III[5]	Bilateral	PV and BESS	128	6/1/2028	25 PV, 25 BESS	$49.95	$15,460	$ 125.22
Castor Storage[6]	2024 RFP	BESS	310	5/31/2029	20	N/A	$18,950	$ 103.21
Commerce Station Energy Storage	2024 RFP	BESS	100	5/29/2028	20	N/A	$13,950	$ 139.81
Coyote Energy 1	2024 RFP	PV and BESS	600	12/31/2030	25 PV, 20 BESS	$42.99	$14,930	$ 108.15
Dry Lake East Energy Storage II	2024 RFP	BESS	150	12/31/2027	20	N/A	$13,930	$ 146.13
Fish Springs Ranch Energy Storage	Bilateral	BESS	75	12/31/2027	20	N/A	$16,550	$ 162.79
Hot Pot Energy Center	Sleeved for customer agreement	PV and BESS	350	10/31/2029	20 PV, 20 BESS	$36.00	$13,250	$ 105.31
Iron Point Energy Center		PV and BESS	250	12/31/2029	20 PV, 20 BESS	$36.00	$13,250	$ 107.92
Jersey Valley Solar and Storage	2024 RFP	PV and BESS	67	1/10/2028	25 PV, 20 BESS	$34.65	$13,950	$ 106.05
Libra Solar & Storage Project Third Amendment[7,8]	Bilateral	BESS	200	1/1/2048	5	N/A	$24,620	$ 101.45
Lux Solar Center[9]	2024 RFP	PV and BESS	125	7/1/2028	25 PV, 20 BESS	$55.95	$18,090	$ 135.70
Nevada Geothermal Portfolio (OKGP)[10]	Sleeved for customer agreement	Geothermal	50	12/31/2030	15	$107.00	N/A	$ 107.00
NGP Blue Mountain Third Amendment	2024 RFP	Geothermal	30	3/31/2027	20	$105.00	N/A	$ 105.00
North Nevada Geothermal Portfolio	Sleeved for customer agreement	Geothermal	100	12/31/2030	20	$105.00	N/A	$ 105.00
Sleepy Orange	2024 RFP	PV and BESS	500	5/31/2030	25 PV, 20 BESS	$30.90	$12,750	$ 89.80
Southern Bighorn 1 and 2[11]	2024 RFP	PV and BESS	400	7/15/2028	25 PV, 20 BESS	$47.23	$15,500	$ 117.93
Trego Grid	2024 RFP	BESS	200	6/30/2028	20	N/A	$15,070	$ 151.52
White Pine Solar[12]	2024 RFP	PV and BESS	350	12/31/2028	25 PV, 20 BESS	$28.20	$11,350	$ 102.20
Winston Solar[13]	2024 RFP	PV and BESS	400	10/1/2029	25 PV, 20 BESS	$39.60	$14,220	$ 111.50

1. All PPAs will serve non-customer-specific bundled-loads except for the Hot Pot Energy Center, Iron Point Energy Center, Nevada Geothermal Portfolio (OKGP) and North Nevada Geothermal Portfolio PPAs that are sleeved PPAs associated with customer agreements.
2. Each Solar PV/BESS resource will have a 1:1 PV/BESS ratio.
3. LCOS is for BESS, and hybrid LCOE for solar PV+BESS; all LCOE/LCOS are inclusive of Network Upgrade Costs if known.
4. Project consists of 2 PPAs: Amargosa Energy Center (Phase 1), and Amargosa Energy Center (Phase 2).
5. BESS capacity is reduced to 32 MW in contract years 21-25.
6. BESS is an 8-hour duration BESS.
7. PPA Amendment adds 200 MW of BESS in contract years 21-25.
8. LCOE represents the entire 700 MW Libra Solar and Storage Project including the additional 200 MW BESS.
9. PV price may increase to $57.97 with an LCOE of $143.92, pending outcome of final project permitting approvals.
10. PPA requires a minimum of 50 MW but allows for up to 150 MW of capacity.
11. Project consists of 2 PPAs: Southern Bighorn 1, and Southern Bighorn 2.
12. PV and BESS price is subject to 2% annual escalation.
13. Project consists of 2 PPAs: Winston Solar - LG Facility, and Winston Solar - MK Facility.

The Companies are seeking approval of these PPAs for multiple reasons, as described next.

First, the PPAs represent projects that have demonstrated the ability to interconnect and transmit power on their intended CODs. Transmission is a major impediment for the growth of generation in Nevada. For example, of the 198 project proposals that the Companies evaluated in the 2024 RFP, nearly half were identified to have critical flaws due to inadequate interconnection progress leading to uncertain timelines for completion of network upgrades, or transmission constraints that

delayed proposed in-service dates beyond the interconnection date. While most new generation projects require significant transmission network upgrades that are long duration and costly to implement, three of the PPAs are for projects located at existing facilities (NGP Blue Mountain geothermal, Castor BESS, and Fish Springs BESS) and thus transmission availability is certain and there are minimal network upgrades required to interconnect these resources.

Second, many of the non-customer-specific bundled-load PPAs provide renewable energy credits and allow the Companies to track compliance with the increasing state RPS requirements and support the state's clean energy goals in the long term. In addition to the PCs provided by renewable energy generators, the PPAs that incorporate a BESS can act as a sink for renewable energy during times when renewable generation would otherwise be curtailed and, thus, allows the flexibility to reduce curtailments and generate PCs under certain operating circumstances[10].By charging during periods of high solar output and discharging during periods of increasing net load as solar generation declines, BESS helps balance the net system demand by smoothing mid-day net load reductions while moderating both the magnitude and rate of late-afternoon to evening system ramps. Moreover, projects with BESS can further act as a tool for economic dispatch by storing energy when grid prices are low and discharging when prices are high.

Third, in addition to helping reduce the Companies' open capacity positions and meet load requirements, these PPAs help ensure the steady supply of renewable energy and storage projects in development. While the Companies cannot publicly speculate on the eventual fate of individual projects, it is reasonable and prudent to expect and plan for a portion of the projects to reach commercial operation late and, for some, to never reach commercial operation, as recent experience has shown through cancelations, delays, or shortfalls of previously approved projects.[11] In this filing, the Companies considered the sources of risk for non-delivery of the renewable energy PPAs (e.g., impacts on permitting schedule due to the DOI Review Policy Memorandum, safe harbor strategy and tax credit eligibility due to project schedule risk, etc.) when selecting the resources, and further worked to craft narrow language in the agreements that provides targeted relief for specific future events that may obstruct project delivery, thus enhancing overall viability of these resources.

Fourth, these PPAs will allow the Companies to meet current and future customer needs and support a growing need to provide customers with sustainable green energy, namely through the NGR and CTT. There is increasing interest in the Nevada business community to source generation from zero-carbon, renewable sources. Although Nevada is a long-time leader in promoting renewable generation, many Nevada businesses and residential customers have their own

[10] The Commission has previously expressed concerns about extended periods of oversupply and the volume of curtailments in Docket Nos. 25-02033, 25-02034 & 25-02035, September 9, 2025, Modified Final Order at 15-16.
[11] Boulder Solar III PPA, approved in Docket No. 24-05041, failed to achieve a critical project milestone due to permitting delays and increased costs, including tariffs and other market factors, and the PPA was subsequently terminated.

sustainability objectives that are more aggressive than the State's policies. Having a growing pool of renewable resources enables the Companies' green energy programs to thrive. These efforts align with the Companies' ongoing commitment to support economic development throughout Nevada by collaborating with many partners to attract, retain, and expand the renewables industry while diversifying the economy. When all or a portion of the renewable energy is allocated to specific job-generating customers, it also promotes overall economic development, creates additional tax base for the State and its counties, and lowers the total amount of energy that would otherwise have to come from carbon-based generating resources or would need to be imported from neighboring states. Two geothermal PPAs (Nevada Geothermal Portfolio ("OKGP") and North Nevada Geothermal Portfolio) and two solar PV and BESS PPAs (Hot Pot Energy Center and Iron Point Energy Center), will be 100 percent dedicated to serve large customer data center loads through sleeved PPAs associated with customer agreements.

Fifth, these renewable energy and BESS PPAs have presented a clear path to reach commercial operation through the mitigation of anticipated risks. Risks include typical project development challenges such as obtaining permits and authorization from governmental agencies, customary challenges which are now exacerbated due to recent federal policy reversals aimed at stalling solar development on federal land. As discussed further in this section's Part F below, the DOI Review Policy Memorandum requiring additional multi-layered review of solar projects on federal land has created massive uncertainty in permit approval timelines. Because the vast majority of Nevada's lands are under federal management, most projects are subject to various federal approvals prior to start of construction, and thus the unpredictable permitting review process creates challenges to price certainty and deliverability assurance. An example of a prime project attribute that mitigates deliverability risk is the project being located entirely on private land, inclusive of project generation tie line and access roads, such that no federal approval process is necessary. Three of the solar PV and BESS PPAs (Jersey Valley Solar and Storage, Lux Solar Cener, and Winston Solar), share this attribute, de-risking the projects from delays due to federal permitting, while three others (Southern Bighorn 1 and 2, Boulder Solar III, and Libra Solar & Storage Project Third Amendment) are also de-risked by having already received necessary federal approvals.

Sixth, these PPAs will provide supplemental benefits to the Companies' system, such as voltage support, load management, primary frequency response, and other system reliability benefits that enhance Nevada's energy independence. Unlike the energy-shifting and curtailment mitigation benefits mentioned above, BESS are capable of automatically supporting system reliability by quickly responding to changes in grid conditions, helping stabilize the system during routine fluctuations and unexpected events without the need for operator intervention. These services support reliability objectives established by North American Electric Reliability Corporation ("NERC") as the electric grid integrates higher levels of inverter-based resources. Additionally, as discussed in the Economic Analysis Section of the Supply Plan Narrative, the near-term in-

service date of two PPAs (Jersey Valley Solar and Storage, and Fish Springs Ranch Energy Storage) reduces a reliability risk for Sierra.

Seventh, these PPAs are consistent with the goals of the recently passed Assembly Bill 524 ("AB524") (2023) provisions related to the assurance of electric supply reliability, availability, and affordability, as well as commitments to the State's goals of reducing reliance on power market purchases through securing energy from dedicated in-state resources while providing economic benefits to Nevadans. The majority of these projects also take advantage of the Production Tax Credit ("PTC") as well as the Investment Tax Credit ("ITC") for renewable and energy storage technologies, allowing the Companies to secure a substantial level of renewable energy supply at the current market's attractive pricing that includes a passthrough of solar tax credits to the benefit of the Companies' customers. The passage of the OBBBA has resulted in a complete phase-out of the solar tax incentives[12], making it very likely that the cost of solar resources in future RFP bids will increase. Thus, securing the PPAs that take advantage of the available tax credits now prior to the imminent expiration of tax credits will provide long-term benefits for customers.

Eighth, these PPAs have the capability to achieve commercial operation in the near term. Speed to power is a critical consideration to address the aggressive projected load growth in Nevada. According to data pulled from the Companies' Open Access Same-time Information System ("OASIS"), renewable energy and storage resources make up over 90 percent of the projects that have an executed generator interconnection agreement, providing limited alternative resource options available with mature interconnection progress[13]. As discussed in the Generation Section of the Supply Plan Narrative, the lack of vendor diversity of thermal generation equipment suppliers has led to manufacturing backlogs and long lead-times for combustion turbines and generators. Solar and BESS manufacturers, on the other hand, benefit from diverse, global, and high-volume equipment supply chains. These technologies are also modular, can be built in phases, can deliver partial capacity early during commissioning, and avoid risks associated with fuel infrastructure.

Ninth, these PPAs will provide significant economic benefits to the State of Nevada. All projects will be located in Nevada and increase total employment—from both short-term construction and long-term operations—of Nevada's workforce. Based on a summation of estimates provided by the developers of each proposed project, as provided in Technical Appendix REN-25, the construction phase will enable over 4,700 jobs at an average salary of over $119,000 per year,

[12] In general, solar projects that begin construction before July 4, 2026, must be placed in service prior to December 31, 2030, to maintain eligibility for tax credits. Solar projects that begin construction after July 4, 2026, and that are placed in service after December 31, 2027, are not eligible for the tax credit.

[13] Nevada Power Company d/b/a/ as NV Energy OASIS website, *Withdrawn and Executed Generator Interconnections*, April 15, 2026, available at https://www.oasis.oati.com/woa/docs/NEVP/NEVPdocs/Withdrawn_and_Executed_Generator_Interconnections_-_04-07-2026.pdf

estimated at over $640 million in payroll contributions. Following commercial operations, the projects are estimated to provide 238 permanent jobs for local Nevadans with an average salary of $97,561 per year, resulting in over $547 million in payroll over the life of the projects. Beyond employment and wages, these projects will also provide increased property tax for their respective counties and sales taxes from the purchase of local goods, providing lasting long-term benefits to the state's economy.

The Companies' commitment to renewables and storage goes beyond just meeting standards: it is about leading the way. The Companies have fostered renewable energy development since before the establishment of an RPS, having signed their first geothermal contract in 1986. The Companies' customers currently benefit from one of the most diverse renewable energy portfolios in the nation, including 48 long-term renewable and storage PPAs representing a total nameplate capacity of approximately 3,668 MW of generation and 553 MW of storage capacity in operation.[14] The Companies' renewable PPAs form a diverse renewable portfolio that is a mix of solar, geothermal, hydro, methane, and wind resources. At a time the Companies' commitment to historic levels of capital expenditures for approved infrastructure calls for mechanisms for prudent and efficient capital preservation and the transfer of construction and development risks, the addition of these third-party PPAs would further strengthen the Companies' portfolio of renewable energy and storage resources. In sum, the approval of these renewable and storage projects benefits the environment, the citizens of Nevada, and align with the state's overall policy goals.

D. Description of PPA Projects

The Companies propose 19 non-customer-specific bundled-load PPAs representing 16 projects for solar PV energy and BESS and geothermal energy, and four customer-specific PPAs under the proposed sleeved PPAs associated with customer agreements for solar PV energy and BESS and geothermal energy, as described next.

Amargosa Solar Development Solicitation and Amargosa Energy Center

In the 2024 RFP, the Companies solicited proposals from third parties to develop the Amargosa Solar ("Amargosa") project through an APA, where Nevada Power is the seller of its Amargosa project assets, that is conditioned on Commission approval of either a Build-Transfer Agreement ("BTA") or a PPA for the offtake of the energy where Nevada Power is the purchaser. The Amargosa project is needed for several reasons, including the following: 1) it has been a named placeholder resource for energy and renewable PCs in the Companies' 2024 Joint IRP filing and therefore its energy and credits have been planned to stay within the Companies' service territory to serve the Companies' customers, 2) the Companies have reserved transmission capacity for

[14] Agreements that do not include the purchase of energy such as Renewable Energy Credit Purchase Agreements are not included in these totals.

Amargosa and have established the facility as a Designated Network Resource ("DNR") ,[15] 3) its value has been vetted through a competitive solicitation open to all developers to participate in bidding a proposal for the Amargosa project, and 4) the project details and risks are known to the Companies—common risks such as site control, community support, cost and length of generation tie line, environmental permitting scope, extent of grading due to site topography, and available transmission capacity[16] are already sufficiently mitigated—requiring minimal due diligence review.

The solicitation outlined a proposal to develop up to 1200-MW solar PV and 1200-MW BESS with a COD of December 31, 2030. At its maximum size, the Amargosa project is poised to become the largest solar and BESS project in the U.S, 50 MW larger than the currently largest planned solar and BESS project, the Darden Clean Energy project, a 1,150-MW solar PV and 1,150-MWh BESS project that will be located in California.[17] The Amargosa project assets currently owned by Nevada Power, which would be transferred through the terms of the APA, include the two land leases secured from the U.S. Bureau of Land Management ("BLM")land auction as described in Docket No. 23-08015, two 600-MW solar PV and BESS interconnection positions, Geographic Information System ("GIS") data, and preliminary design documentation. Because the network upgrade costs were not known at the time of the solicitation, multiple pricing proposals corresponding to various network upgrade cost scenarios were also part of the solicitation.[18]

In response to its solicitation in the 2024 RFP, the Companies received proposals from five bidders for options to develop Amargosa, including four bidders proposing PPA options and one bidder proposing a BTA option. Due to higher LCOE and projected capital constraints on the time horizon necessary for making payments under a BTA, the Companies focused on the PPA options for pursuing the Amargosa project development.

The project size and COD of the Amargosa Solar project phases as presented in the Named Placeholder discussion in the Companies' 2024 Joint IRP filing were made under different assumptions applicable at the time.[19] Given the current changes in circumstance, including

[15] A Designated Network Resource is specific resource that the Companies' have formally designated under the Open Access Transmission Tariff, ensuring transmission capacity is available to serve the Companies' native load using firm network transmission service.
[16] The Companies have reserved 1200 MW of transmission service for the full output of Amargosa with delivery to Nevada Power's system, as well as 685 MW of transmission service with delivery to Sierra's system, through executed Network Integration Transmission Service Agreement ("NITSA"). .
[17] California Energy Commission, *Darden Clean Energy Project*, March 26, 2026, available at https://www.energy.ca.gov/powerplant/solar-photovoltaic-pv-battery-energy-storage/darden-clean-energy-project.
[18] Bidders were asked to provide pricing for the solar PV and the BESS at various increments of network upgrade cost assumptions, from $0 up to $600 million. As the actual network upgrade cost estimates were anticipated to be received during the evaluation period, the Companies were able to proactively acquire the corresponding pricing proposals to use as a factor of consideration when evaluating the bids.
[19] Docket No. 24-05041, Volume 8 at 90 of 393.

increased projected load growth, the change from Company-owned to third-party development of the resource, and the need to place solar projects in service prior to the end of 2030 in order to secure tax credits, the highest value of the Amargosa project is realized at its maximum size of 1200-MW solar PV and 1200-MW BESS with a COD on or before December 31, 2030.

As mentioned in the 2024 RFP overview above, the Companies solicited a "cap pricing" for Amargosa project proposals. Cap pricing was used to evaluate Amargosa project proposals because the project's timeline does not translate to certainty with regards to tax credit eligibility. The Amargosa site's entire 7,226 acre project area is located on BLM land, and, unlike the Sleepy Orange project discussed further below, Amargosa had not "safe harbored" equipment prior to the passage of the OBBBA that would facilitate a 10-year eligibility runway for the tax credits. Therefore, the scope and extent of federal permitting necessary prior to the start of construction, coupled with the uncertainty in federal permitting processing times due to the DOI Review Policy Memorandum, add COD schedule risk. Even if the BLM permitting delays are mitigated, the project is of such a massive scale that the sheer logistics of equipment deliveries, construction manpower, and commissioning coordination activities increase COD schedule risk for the project to reach all 1200 MW of solar PV and 1200 MW of BESS capacities by December 31, 2030. For these reasons, to address delivery assurance concerns, the evaluation of Amargosa project proposals assumes a worst-case scenario that the tax credits for solar are not available when the project reaches its COD, while at the same time, to protect customer value, the PPAs contain provisions that allow for a downward price adjustment mechanism to pass through the tax credit savings if the project is ultimately able to qualify for and claim the PTC.[20] This approach ensures a balance of delivery assurance and customer value. A comparison of the Amargosa bid proposals to the Amargosa Energy Center PPA ("Amargosa Energy Center") selected as the solicitation winner, is presented in Table REN-2 below.

[20] If the solar facility is placed in service on or prior to December 31, 2030, then the PPA price of the solar PV energy will reduce to $35.47 per MWh. In addition, if the solar facility is placed in service after December 31, 2030, but is able to otherwise qualify for any available tax credits pursuant to the law in effect as of that date, then the solar PV PPA price shall be decreased by an amount as determined by an independent accounting firm per the terms specified in sections (B)(1) through (B)(3) of Exhibit 2A of the respective agreements.

REDACTED PUBLIC VERSION

TABLE REN-2

Project Name	Project ID	MWs PV/MWs BESS	COD	Base PV Price ($/MWh)	Cap PV Price ($/MWh)	Base BESS Price ($/MW-month)	Hybrid LCOE (Cap PV Price and Base BESS Price) ($/MWh)	LCOE % more than selected proposal
Amargosa Phase 1	PPA Bidder 1-1.0*	600/1200	12/31/2030					
Amargosa Phase 2	PPA Bidder 1-2.0 Rev 2*	600/0	12/31/2031					
Amargosa	PPA Bidder 2-6.1	1200/1200	12/31/2030					
Amargosa PV Phase 1	PPA Bidder 3-5.1	600/600	12/1/2030					
Amargosa PV Phase 2	PPA Bidder 3-5.3	600/600	12/1/2030					
Amargosa Phase 1	BTA Bidder 4-PV+BESS Rev 1	600/600	3/31/2030	Build Transfer Agreement	N/A	N/A		
Amargosa Phase 2	BTA Bidder 4-PV+BESS Rev 2	600/600	12/31/2030	Build Transfer Agreement	N/A	N/A		
Amargosa Energy Center	**PPA Bidder 5-(Longroad) 3.1****	**1200/1200**	**12/31/2030**					-

Assumption 1: All project LCOE analyses assume $4.68 million Network Upgrade cost per 600-MW phase (i.e. $9.36 million Network Upgrade cost for 1200-MW).
Assumption 2: For BTA bids, LCOE assumes an Energy Community Tax Credit Bonus of 10 percent applicable to both PTC and ITC options.
*Bidder 1's LCOE for the Phase 1 and Phase 2 projects reflects a 1:1 PV-to-BESS ratio, applied for purposes of normalizing the LCOE to enable comparison with other bids.
**Price reflects adjustment due to impact of OBBBA on BLM rent that was not in effect at the time the bids were received.

The Companies selected Longroad Energy's Amargosa Energy Center proposal (bid 3.1) for the Amargosa project's development and offtake pursuant to an APA and a PPA. After the APA closes, pursuant to the consummation of the transaction contemplated, Longroad Energy will acquire the project assets from Nevada Power and lead all project development efforts. The project's offtake will be governed by two PPAs. The Amargosa project was split into two PPAs, each consisting of 600 MW solar PV and 600 MW of BESS, to facilitate, among other things, a greater likelihood of at least the first 600-MW phase of the facility reaching COD on or before December 31, 2030, which would enable solar tax credit eligibility.

As a means to reduce the impact of potential non-delivery and to protect customers in the event of a development failure, the terms of the PPAs require the developer to securitize the project through

the posting of a development security[21] prior to COD at escalating levels tied to key project milestones. Specifically, the developer is required to post $12 million ($6 million per PPA) in development security upon execution of the PPAs, which increases to $24 million ($12 million per PPA) on January 1, 2027, $48 million ($24 million per PPA) on January 1, 2028, $72 million ($36 million per PPA) on January 1, 2029, and notwithstanding the aforementioned dates, $204 million ($102 million per PPA) upon the date that both the APA has closed and the Companies have received PUCN approval of the PPAs.

As discussed in this section's Part B above, given the uncertainty to project development and timeline posed by the DOI Review Policy Memorandum, the Companies were challenged to contract with counterparties willing to bear the risk of losing the development security due to such unprecedented external factors preventing their projects from reaching the intended COD. To facilitate a viable transaction, the Companies negotiated terms of these PPAs that allow for the Companies to retain a portion of the development security if the PPAs terminate due to the project's failure to obtain Notice to Proceed ("NTP") authorization from the BLM prior to June 30, 2030. The retained security amount was tailored specific to these PPAs and set equal to $12 million ($6 million per PPA). This balanced approach to development security structure is designed to strongly incentivize the developer to mitigate development risks and successfully deliver the project, while providing meaningful financial protection to customers in the event of contract non-performance or termination.[22]

Key Project Characteristics:

Amargosa Energy Center is a proposed utility-scale solar PV generation facility with co-located BESS to be located on federal land administered by the BLM in Nye County, Nevada, connecting to the Companies' transmission system. The project is being developed by Longroad Energy ("Longroad") and would be owned and operated by a Longroad affiliate, AV Energy Center, LLC ("AV Energy Center"). Longroad is a Boston-based developer, owner, and operator of renewable energy projects. Longroad has raised $15.3 billion in capital and has developed 5.1 GW of wind, solar, and storage projects across the United States. The project will be developed by Longroad in two phases, with each phase having its own PPA.

[21]Under the terms of the PPA, the development security is a milestone-based security that must be provided by the developer through the posting of either a letter of credit or a cash deposit, ensuring the Companies can easily and quickly draw on these amounts when applicable.
[22]Any liquidated damage or settlement payments received by the Companies in connection with non-performance or the termination of a power purchase agreement, respectively, are credited to customers by reducing purchased power costs through the applicable fuel and purchased power cost recovery mechanisms.

The BESS is designed for four-hour duration and configured to support delivery of energy, capacity, and ancillary services. The solar and BESS facilities will utilize commercially proven technologies from Tier-1 equipment manufacturers.

The project is located within the BLM-designated Amargosa Valley Solar Energy Zone ("SEZ")[23] located in the Amargosa Desert in Nye County, Nevada. Environmental studies and baseline surveys are ongoing, and no fatal flaws have been identified to date. Land control for the project area is assigned through long-term BLM leases currently held by Nevada Power[24] and intended to be transferred to AV Energy Center, subject to BLM approval and APA contractual requirements. Development and construction of the project are contingent upon receipt of required federal approvals, including issuance of a BLM Right-of-Way and anNTP following completion of National Environmental Policy Act ("NEPA") review, which are subject to the DOI Review Policy Memorandum review process.

The project will interconnect to the Companies' transmission system along Greenlink West at the Sagebrush Substation (previously referred to as the Amargosa Substation's expansion related to Greenlink Nevada Transmission projects) at the voltage level of 525 kilovolts ("kV"). Two Large Generator Interconnection Agreements ("LGIAs")of 600 MW each have been secured, which will also be transferred to AV Energy Center upon closing pursuant to the consummation of the transaction contemplated by the APA. Interconnection service is subject to completion of required network upgrades[25].

Under the terms of the proposed Amargosa Energy Center PPA agreement, energy from the solar generating facility would be purchased for a 25-year term at a rate of $68.47 per megawatt-hour ("MWh"), and capacity from the battery energy storage facility would be purchased for a 20-year term at a rate of $12,340 per megawatt-month ("MW-month"). The price of the solar PV incorporates the OBBBA's increase in applicable fees for solar generation projects located on public lands[26], but more impactfully the pricing conservatively assumes that no tax credits for the solar PV facility are available when the facility reaches COD. This is the only PPA in the filing

[23] The Amargosa Valley Solar Energy Zone (SEZ) is a designated leasing area ("DLA") located in Nevada in the Amargosa Desert in a semiarid basin on undeveloped scrubland. The SEZ is located on BLM-administered land within the Southern Nevada District. See U.S. Bureau of Land Management, *Amargosa Valley*, within Solar Energy Zones (providing a full description of the Amargosa Valley SEZ), available at https://blmsolar.anl.gov/solar-peis/sez/nv/amargosa-valley/.

[24] *See* U.S. Bureau of Land Management Press Release, *BLM issues leases for Amargosa Valley Solar Energy Zone parcels in Nevada*, Sep. 13, 2023, available at https://www.blm.gov/press-release/blm-issues-leases-amargosa-valley-solar-energy-zone-parcels-nevada.

[25] While the Interconnection Agreements contemplate the project interconnecting to a collector substation near the Sagebrush Substation, the Companies have identified a viable path to interconnect the project using Provisional Interconnection Service, which eliminates the need for construction of the collector substation to initiate interconnection service, thereby improving project development efficiency and schedule risk.

[26] Section 50302 of the OBBBA established a mandatory statutory framework for BLM acreage rent and capacity fees for solar and wind projects on public lands, including a revenue-based capacity fee equal to 3.9 percent of gross electricity sales, replacing prior discretionary and MW-based fee structures.

that assumes the cap pricing, which, as discussed above, will allow the project to continue its development if external factors prevent it from reaching its planned COD. However, as discussed above, if either or both phases of the project achieve COD on or prior to December 31, 2030, the price of the solar energy will be automatically decreased to $35.47 per MWh.[27] Furthermore, if either or both phases achieve COD after December 31, 2030, but are still otherwise able to qualify for any tax credits, then the solar energy price will be reduced pursuant to an assessment provided by an independent accounting firm. As a conservative and worst-case scenario, the Companies calculated the hybrid LCOE of the project as $130.76 per MWh, which assumes the $68.47 per MWh solar cap pricing and thus could be further reduced if the solar tax credits are realized. As shown in Table REN-2 above, this PPA represents the lowest LCOE of all the viable Amargosa project bids. All costs associated with the PPA will be recovered through Nevada Power's fuel and purchased power base tariff energy rate ("BTER") mechanisms.

According to estimates provided by Longroad, during peak construction the Amargosa Energy Center project is expected to support approximately 500-750 jobs, of which an estimated 250 to 375 positions will be sourced locally from Nevada at an estimated average salary of $125,000 annually, equaling a total estimated payroll of $31.2 to $46.8 million over one construction year. Following commercial operation of both phases, the Amargosa Energy Center project is expected to provide a permanent long-term increase in the workforce for the operation and maintenance of the facility with an estimated 10 positions at an estimated average salary of $128,000 annually, and a total payroll in excess of $3.8 million per year over the 25 years. The final number of hours will be determined by installed equipment requirements, and the paid wage will be in compliance with federal laws up to and including the use of prevailing wage.

Figures REN-1 and REN-2 show a map of the project site.

[27] *See supra* note 48.

FIGURE REN-1
Amargosa Energy Center Project Site (North Parcel)

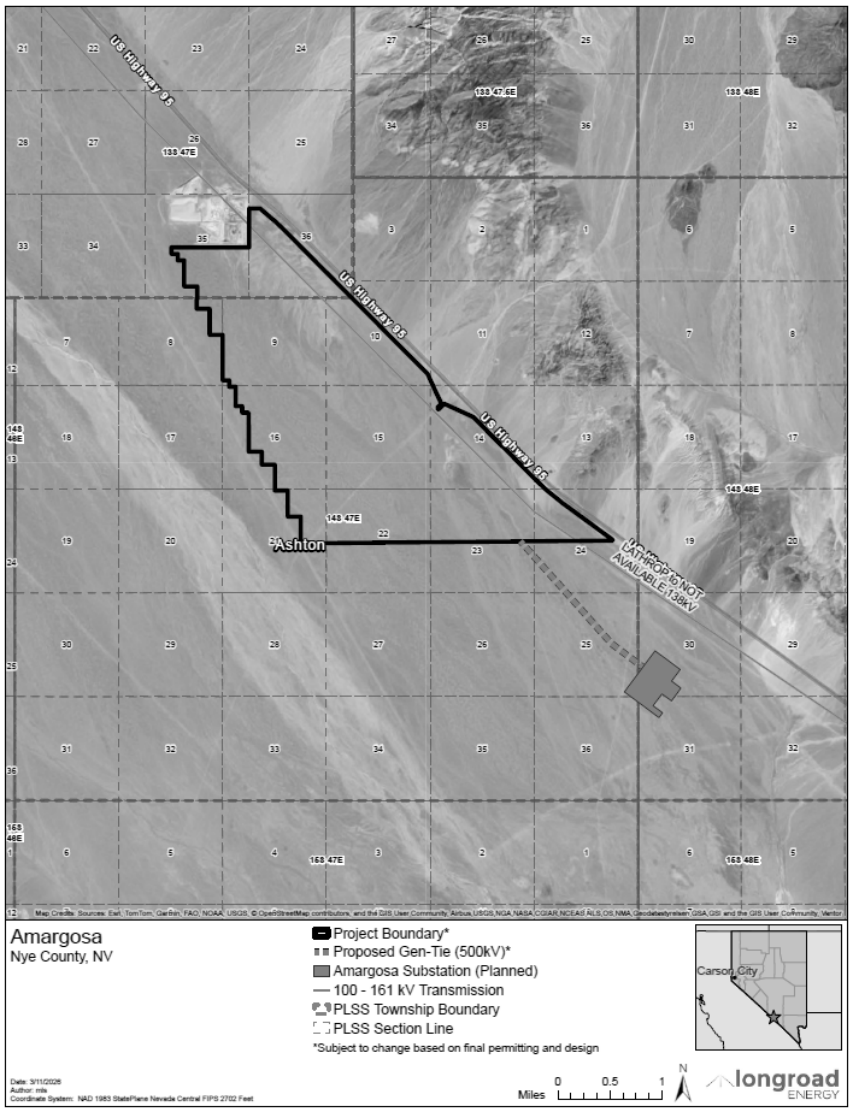

FIGURE REN-2
Amargosa Energy Center Project Site (South Parcel)

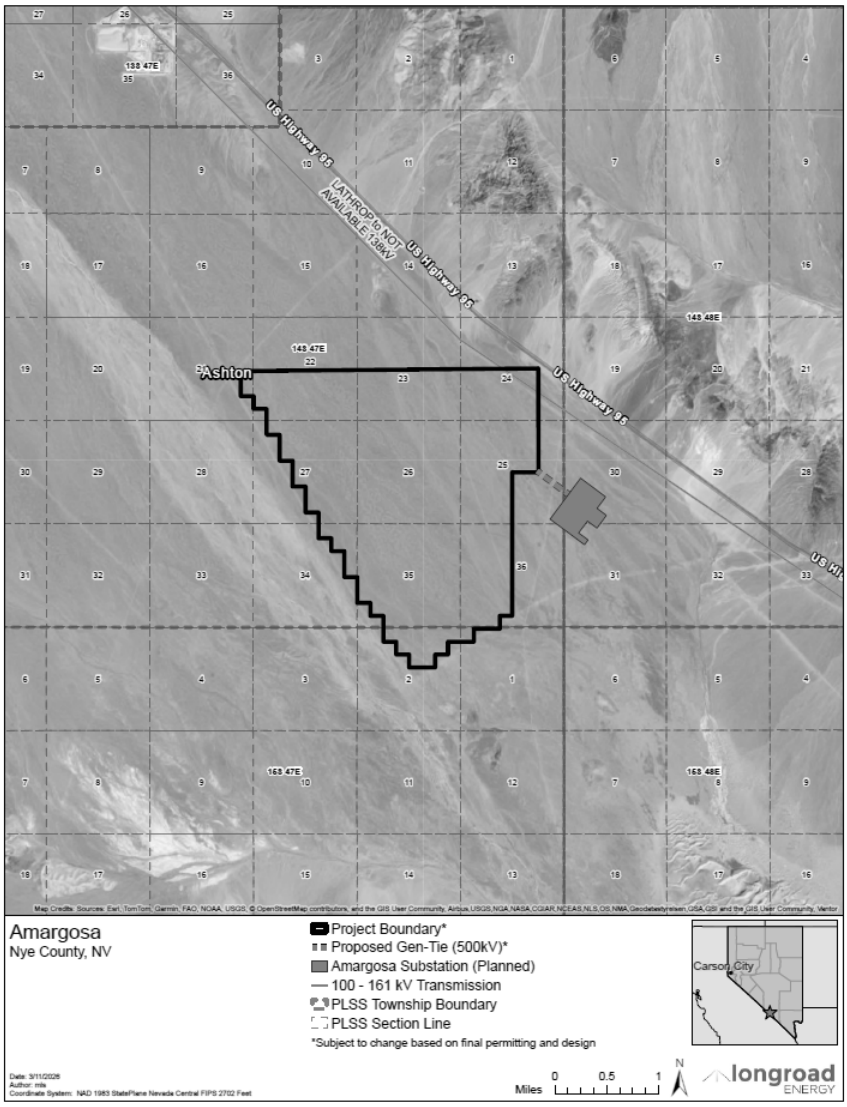

A copy of the two PPAs can be found in Technical Appendices REN-3-AEC(a)(1) and REN-3-AEC(a)(2). The Companies' due diligence summary for the Amargosa Energy Center project is included as Confidential Technical Appendix REN-3-AEC(b). Technical Appendix REN-3-AEC(c) contains detailed information about the Amargosa Energy Center project, including the information required by NAC § 704.8885, NAC § 704.8887 and § NRS 704.741. Key provisions of the Amargosa Energy Center PPA are summarized in Technical Appendices REN-3-AEC(d)(1) and REN-3-AEC(d)(2).

Boulder Solar III

The Companies present the Boulder Solar III PPA ("Boulder Solar III") that will consist of a 127.9-MW PV solar and 127.9-MW BESS resource in Nevada Power's system with a COD of June 30, 2028. This project was not bid into the Companies' 2024 RFP but rather resulted from bilateral discussions between the Companies and the developer[28]. This PPA represents the third iteration of the Boulder Solar III project for the Commission's review.[29] The most recent Boulder Solar III PPA, as approved in the 2024 Joint IRP, Docket No. 24-0541, was terminated on March 20, 2026, due to several issues encountered by the developer, including the following: 1) schedule shift due to BLM permitting delays attributed to the DOI Review Policy Memorandum, and associated costs such as EPC re-pricing associated with the construction delays, 2) tariffs and trade impacts affecting major equipment costs, 3) higher cost of capital in debt, tax equity, and project sponsor equity markets for renewable energy, and 4) land carrying costs for additional lease payments to maintain site control due to construction delays. These issues, primarily affecting cost and schedule, have been mitigated by the developer, with the BLM having granted the necessary Right-of-Way as of January 23, 2026, authorizing the project to begin physical construction.

Boulder Solar III utilizes existing infrastructure, sharing a generation tie line and interconnection facilities with the Boulder Solar II and Boulder Solar I projects, which translates to lower network upgrade costs and reduced schedule risk stemming from interconnection delays. Lastly, the project is mature in its design, with the Generator Step-Up ("GSU") transformer already installed and long-lead, high-voltage equipment procured. Given the proposed COD in mid-2028, the project is well-positioned to secure the tax credits and lock in that value for the term. As a means to reduce the impact of potential non-delivery and to protect customers in the event of a development or performance failure, the terms of the PPAs require the developer to securitize the project through the posting of a development security prior to COD at escalating levels tied to key project milestones. While the Companies' recent experience with the developer has not shown delivery assurance, the current PPA requested for approval requires double the amount of development security compared to the previous Boulder Solar III PPA.[30] Specifically, the developer is required to post $7.67 million in development security upon execution of the PPA, which increases to $35.8 million upon receipt of PUCN approval of the PPA. This increased security amount was tailored specific to this project, and ensures that the developer is highly incentivized to mitigate development risks and deliver the project, while also protecting customers against further non-

[28] The previous iteration of the Boulder Solar III PPA, approved in Docket No. 24-05041, originated from the Companies' 2023 Open Resource RFP. The first iteration of the Boulder Solar III PPA, approved in Docket No. 20-07023, originated from bilateral discussions between the Companies and the project developer.
[29] The first iteration of the Boulder Solar III PPA was originally approved in Docket No. 20-07023.
[30] The post-PUCN approval development security requirement of the previous Boulder Solar III PPA approved in Docket No. 24-05041 was equal to $17.9 million.

delivery of the project.[31] Lastly, the PPA is substantially similar to the previous Boulder Solar III PPA approved by the Commission in Docket No. 24-0541, excluding the price and COD which were renegotiated based on current facts and circumstances, as the counterparty has agreed to maintain and carry forward all other previously-negotiated contractual terms and obligations in the new PPA.

Key Project Characteristics:

The proposed Boulder Solar III project is a utility-scale solar PV and BESS facility located in Boulder City, Clark County, Nevada, within the Eldorado Valley Energy Zone. The project is being developed by Boulder Solar III, LLC, a subsidiary of parent company Hanwha Renewables, LLC.[32] Hanwha Renewables has extensive, direct experience developing, constructing, financing, and operating large-scale solar projects in Nevada, with a proven track record in Clark County and NV Energy's service territory. Most notably, Hanwha Renewables and its affiliates developed and constructed the Techren Solar I–V projects, also in the Eldorado Valley Energy Zone near Boulder City, totaling approximately 400 MW of utility-scale solar capacity placed into service between 2018 and 2020. These projects demonstrate successful execution under Nevada's permitting, labor, environmental, and interconnection frameworks, including long-term operations within the Companies' transmission system.

Boulder Solar III will utilize commercially-proven PV modules mounted on single-axis tracking systems to optimize energy production. Energy produced by the solar facility will be delivered to Nevada Power's system or stored in the co-located BESS for later dispatch. The battery system will be a four-hour BESS, providing approximately 511 MWh of BESS storage capacity, and will employ lithium-ion technology with integrated monitoring, control, cooling, and safety systems, providing flexible and dispatchable capacity to support system reliability.

Project facilities will be located on approximately 1,050 acres of land leased from the City of Boulder City, for which the developer has secured full site control. The project is sited within an area specifically designated for large-scale energy development and is adjacent to existing renewable generation facilities. Environmental review for the Boulder Solar complex has been completed through prior federal and state permitting actions, and the project has secured the necessary BLM right-of-way approvals to support access and internal utility corridors including

[31] Any liquidated damage or settlement payments received by the Companies in connection with non-performance or the termination of a power purchase agreement, respectively, are credited to customers by reducing purchased power costs through the applicable fuel and purchased power cost recovery mechanisms.
[32] On January 1, 2026, Hanwha Energy USA Holdings unified its 174 Power Global and Hanwha Renewables development platforms, now operating under the Hanwha Renewables brand. See Hanwha Energy, *Press Release*, January 1, 2026, available at https://hanwha-energy-pr.my.canva.site/hanwha-energy-announcement

approvals subject to the DOI Review Policy Memorandum as mentioned above. The project does not require new generation tie-line construction.

Boulder Solar III will interconnect at the Nevada Solar One Substation at 230 kV via an existing, operational 230-kV generation tie-line shared with the Boulder Solar I and II facilities. An LGIA is in place. No material network upgrades are required to deliver the full project capacity.

The Companies' propose to execute a new PPA with Boulder Solar III, LLC for the output of the solar facility for a 25-year term and the BESS facility for a 25-year term; however, the guaranteed capacity of the BESS will reduce from 128 MW to 32 MW in contract years 21-25[33]. Under the agreement, solar energy will be purchased at a fixed price of $49.95 per MWh, and battery capacity will be purchased at a fixed rate of $15,460 per MW-month. The Companies calculated the hybrid LCOE of the project as $125.22 per MWh. Based on the deliverability assurance attributes described in this project's introductory paragraphs above, the project's pricing assumes that it will qualify for tax credits, and, therefore, is best compared to pricing of paired solar and BESS projects bid in the 2024 RFP that, based on their risk to reaching COD before the end of 2030, are assumed to not qualify for solar tax credits[34]. For perspective, the Companies calculated the average LCOE of solar and BESS project proposals from the 2024 RFP that were not selected using the submitted cap pricing of the solar energy and found that this project's LCOE is 20 percent lower in comparison. A copy of the project LCOE comparison to average LCOE using solar cap pricing of non-selected solar and BESS project proposals is presented in Confidential Technical Appendix REN-24. All costs associated with the PPA will be recovered through Nevada Power's fuel and purchased power mechanisms.

According to estimates provided by the developer, during construction, the project is expected to support approximately 240 direct jobs, of which an estimated 180 positions will be sourced locally from Nevada at an estimated average salary of $121,680 annually, equaling a total estimated payroll of $21,902,400 over one construction year. Following commercial operation, the project is expected to provide a permanent long-term increase in the workforce for the operation and maintenance of the facility with an estimated four positions at an estimated average salary of $99,840 annually and a total payroll in excess of $9,984,000 million over 25 years.

Figure REN-3 shows a map of the project site.

[33] The availability of the BESS in contract years 21-25 involves an operating scheme that includes light depth of charge and rotational cycling of the available BESS to guarantee 32 MW of capacity.
[34] The list of projects that were used as a basis for comparison include all paired solar and BESS resources bid into the 2024 RFP that were not selected but were otherwise not eliminated from consideration (i.e. due to a fatal flaw such as lack of available transmission capacity by the project's intended COD).

FIGURE REN-3
Boulder Solar III project Site

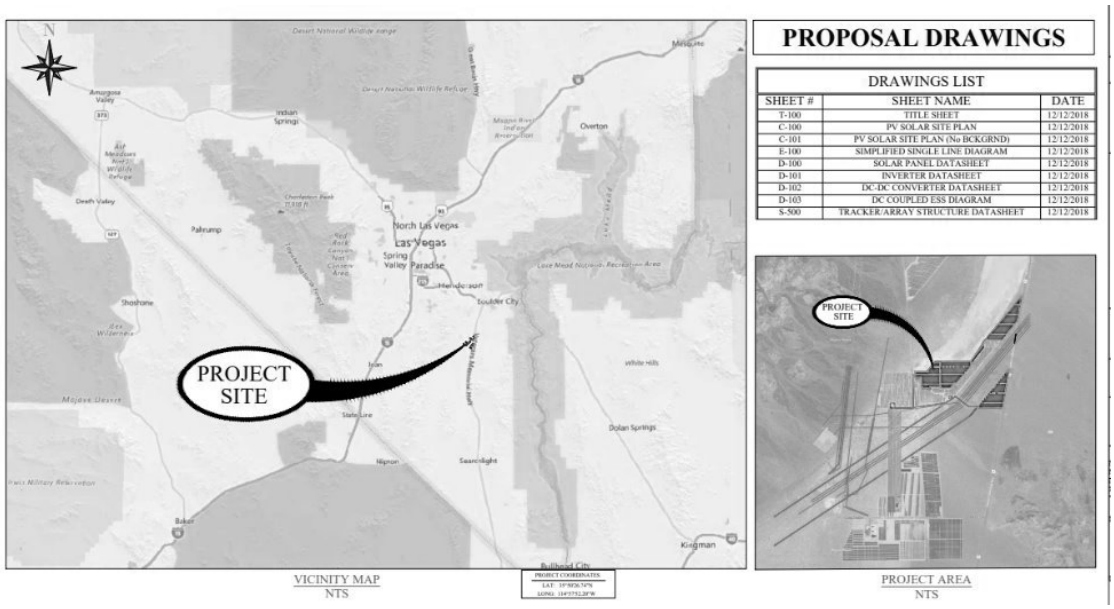

A copy of the PPA can be found in Technical Appendix REN-4-BS3(a). The Companies' due diligence summary for the Boulder Solar III project is included as Confidential Technical Appendix REN-4-BS3(b). Technical Appendix REN-4-BS3(c) contains detailed information about the Boulder Solar III project, including the information required by NAC § 704.8885, NAC § 704.8887 and § NRS 704.741. Key provisions of the Boulder Solar III PPA are summarized in Technical Appendix REN-4-BS3(d).

Castor Storage

The Companies present the Castor Storage PPA ("Castor Storage") that will consist of a standalone BESS with approximately 310 MW of output capacity with an eight-hour duration and approximately 2,480 MWh of usable stored energy capacity, making it the Companies' first long-duration BESS project. This project was bid into the Companies' 2024 RFP and was selected based on several factors including the Companies' due diligence assessment, system needs, and customer value. The project is located in Clark County, Nevada, sited adjacent to the existing Gemini Solar facility, enabling efficient use of previously developed site control, interconnection capacity, and permitting approvals. With an expected COD of May 31, 2029, the project is capable of adding significant capacity a year earlier than any thermal units as discussed in the Economic Analysis Section of the Supply Plan Narrative. The PPA includes minimal changes from the Companies' pro forma agreement, ensuring elevated customer protections from non-delivery and poor performance. The project will qualify for the ITC, which is reflected in the pricing, passing the value on to Nevada Power's customers for the contract term.

As a means to reduce the impact of potential non-delivery and to protect customers in the event of a development or performance failure, the terms of the PPA require the developer to securitize the project through the posting of a development security prior to COD at escalating levels tied to key project milestones. Specifically, the developer is required to post $9.3 million in development security upon execution of the PPA, which increases to $26.35 million upon receipt of PUCN approval of the PPA.

Due to complicated financing requirements faced by the developer resulting from the project sharing facilities (e.g. interconnection agreement) with the separately-financed Gemini Solar facility, the Companies' were challenged to contract with the counterparty as they were not willing to bear the risk of losing the development security due to uncertainty in obtaining a shared facilities agreement with the Gemini Solar facility necessary for the project to reach its intended COD. To facilitate a viable transaction, the Companies negotiated terms of the PPA that allow for the Companies to retain a portion of the development security if the PPA terminates due to the project's failure to submit a plan to obtain a shared facilities approval, a Shared Facilities Approval Plan ("SFAP") prior to January 31, 2027. The retained security amount under this scenario was tailored specific to this PPA and set equal to $1.25 million. Following achievement and acceptance of the SFAP, the PPA further allows that the Companies may retain a portion of the development security if the PPA terminates due to the project's failure obtain requisite Shared Facilities Approvals ("SFAs") by July 31, 2027. The retained security amount under this scenario was tailored specific to this PPA and set equal to $9.3 million. This balanced approach to development security structure is designed to strongly incentivize the developer to mitigate development risks and successfully deliver the project, while providing meaningful financial protection to customers in the event of contract non-performance or termination.

Key Project Characteristics:

The Castor Storage project is being developed by Castor Storage, LLC, an affiliate of Primergy Solar, the developer of the Sleepy Orange project discussed above.[35] The facility will employ commercially proven lithium-ion battery technology in an AC-coupled configuration, with integrated power conversion systems, transformers, control systems, and safety equipment. The BESS will be capable of charging from and discharging to the Companies' transmission system to provide dispatchable energy and capacity, as well as ancillary services in support of grid reliability.

Project facilities will be located on approximately 30 acres of land within the existing Gemini Solar facility footprint, for which full site control has been secured through previously approved federal land rights. The project is located on BLM land covered under an existing right-of-way granted for the Gemini Solar and Storage project, and modifications to existing permits are anticipated to accommodate the additional BESS facilities. Environmental diligence, including

[35] The project was bid into the Companies' 2024 RFP as the "Gemini BESS" project.

biological, cultural, and geotechnical studies, has been completed for the site, and no material environmental constraints have been identified that would preclude development.

Castor Storage will interconnect to the Companies' transmission system at the Crystal Substation at 230 kV using the existing generation tie line associated with the Gemini Solar facility[36]. An executed LGIA is in place for the Gemini Solar facility, and a material modification request has been submitted to incorporate the additional BESS capacity from the Castor Storage project. No new generation tie-line construction is required, as the project will utilize available interconnection capacity at the existing point of interconnection.

The Companies propose to execute a new PPA with Castor Storage LLC for the output of the BESS facility for a 20-year term. Under the agreement, BESS capacity will be purchased at a fixed rate of $18,950 per MW-month. The Companies calculated the LCOS as $103.21 per MWh. When comparing the LCOS of this resource to the Dodge Flat BESS Addition, which was the most recent standalone BESS resource approved by the Commission in 2024 Joint IRPA, Docket No. 25-10028, the proposed project's LCOS is lower by approximately 38 percent. While this resource has a higher cost per MW-month than the Dodge Flat BESS Addition, the LCOS calculation factors in the fact that the BESS provides capacity for an 8-hour duration, rather than the 4-hour duration of the Dodge Flat BESS addition. A comparison of the LCOS for all standalone BESS projects presented for approval in this filing, relative to the Dodge Flat BESS Addition, is provided in REN-23: Standalone BESS LCOS Comparison Summary. All costs associated with the agreement will be recovered through Nevada Power's fuel and purchased power BTER mechanisms.

According to estimates provided by the developer, during construction, the project is expected to support approximately 200 jobs at peak activity, with an average salary of $124,800 annually, equating to a total estimated payroll of $18.72 million over one construction year, with one permanent operation and maintenance position following commercial operation at an estimated average salary of $114,400 annually, and a total payroll of $2.29 million over 20 years. The developer intends to utilize union labor and execute work site agreements consistent with the Companies' requirements.

Figure REN-4 shows a map of the project site.

[36] The project will be located within Overton Power District No. 5's electric service territory but will connect to Nevada Power's transmission system and serve Nevada Power customers.

FIGURE REN-4
Castor Storage project Site

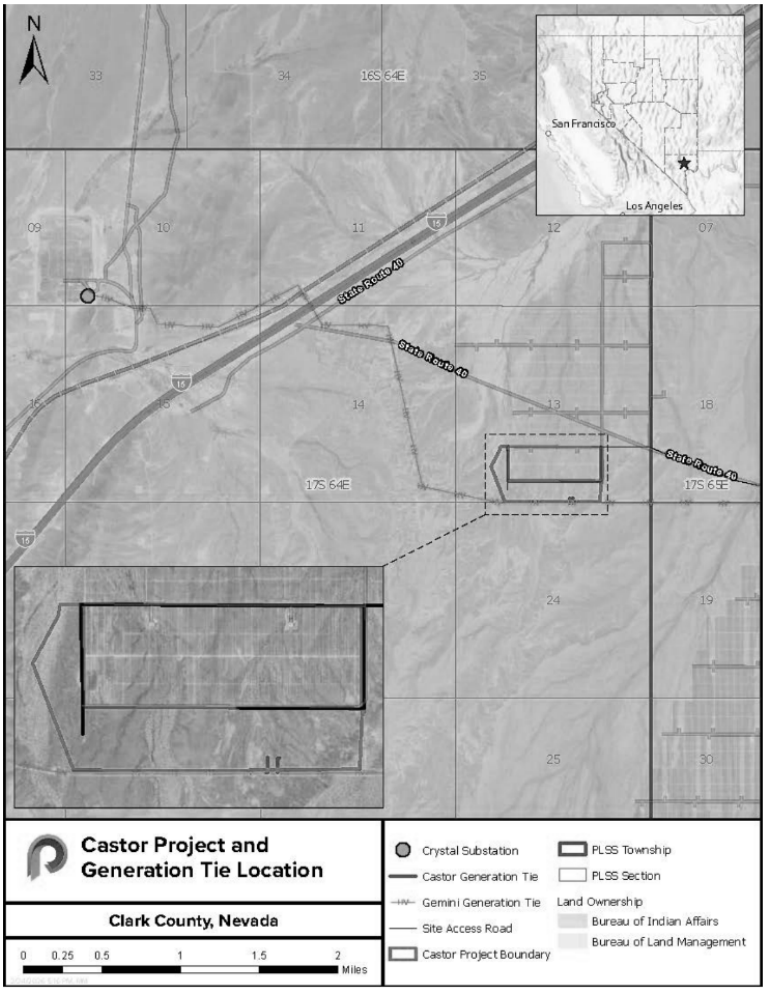

A copy of the PPA can be found in Technical Appendix REN-5-CS(a). The Companies' due diligence summary for the Castor Storage project is included as Confidential Technical Appendix REN-5-CS(b). Technical Appendix REN-5-CS(c) contains detailed information about the Castor Storage project, including the information required by NAC § 704.8885, NAC § 704.8887 and § NRS 704.741. Key provisions of the Castor Storage PPA are summarized in Technical Appendix REN-5-CS(d).

Commerce Station Energy Storage

The Companies present the Commerce Station Energy Storage PPA ("Commerce Station") that will provide a 100-MW, four-hour standalone battery resource in Nevada Power's system with a COD of May 29, 2028. This project was bid into the Companies' 2024 RFP and was selected based

on several factors including the Companies' due diligence assessment, system needs, and customer value.

The facilities will be located on private land in Clark County which does not require BLM or other federal approvals subject to the DOI Review Policy Memorandum approval process, thereby mitigating schedule risk due to permitting. The PPA includes minimal changes from the Companies' pro forma agreement[37], ensuring elevated customer protections from non-delivery and poor performance. The project will qualify for the ITC, which is reflected in the pricing, passing the value on to Nevada Power's customers for the contract term. As discussed in the Transmission Section of the Supply Plan Narrative, the project requires minimal network upgrades.

As a means to reduce the impact of potential non-delivery and to protect customers in the event of a development failure, the terms of the PPA require the developer to securitize the project through the posting of a development security prior to COD at escalating levels tied to key project milestones. Specifically, the developer is required to post $3 million in development security upon execution of the PPA, which increases to $8.5 million upon receipt of PUCN approval of the PPA. This development security structure is designed to strongly incentivize the developer to mitigate development risks and successfully deliver the project, while providing meaningful financial protection to customers in the event of contract non-performance or termination.

Key Project Characteristics:

Commerce Station is a new-build, utility-scale, grid charged standalone battery energy storage project being developed by BayWa r.e., the parent organization to the project entity. BayWa r.e. and its affiliates bring extensive expertise in developing, constructing, and operating renewable energy and battery storage projects, with a global portfolio spanning over 4.5 GW developed and more than 12 GW under management. Their experience includes a robust pipeline of standalone battery energy storage systems, with 299 MW reaching commercial operation in 2025 and 3.1 GW in various stages of development.

The project will interconnect to Nevada Power's Miller Substation at 138 kV via an executed LGIA. The proposed point of interconnection is located approximately one-quarter mile from the project site, resulting in limited interconnection infrastructure requirements and low network upgrade costs.

The project is located on a 0.06 acre site in southern Nevada within property zoned General Industrial (M-2) in the City of North Las Vegas. Battery energy storage facilities are a permitted

[37] The pro forma agreements for respective technology types are the Companies' standardized power purchase contracts that were included in the solicitation documents provided to parties participating in the Companies' 2024 RFP.

use by right within this zoning designation. Given the urban and previously disturbed nature of the site, permitting risk is minimal. No federal or state environmental permits are required for the project. Environmental due diligence, including Phase I environmental site assessment, threatened and endangered species review, aquatic resources assessment, and cultural resources analysis, identified no environmental constraints that would materially affect development or operation.

Commerce Station will utilize Tesla Megapack 2XL lithium-ion battery technology, a proven, Tier 1 solution that has been widely deployed in utility-scale applications across the United States. The project is designed as a fully integrated system, including inverters, energy management systems, and supervisory control and data acquisition capability. The battery system will be supported by a long-term service agreement with the equipment supplier, which provides contractual performance guarantees and ensures consistent operation throughout the 20-year term of the PPA. The system is designed with planned augmentation to maintain contracted capacity over the life of the agreement.

The PPA is with Nevada Power for a 20-year term at a flat capacity price of $13,950 per MW-month for the term. The PPA includes options for Nevada Power to purchase the asset at periodic intervals after commercial operation and at the end of the term. The Companies calculated the LCOS of this resource as $139.81 per MWh. When comparing the LCOS of this resource to the Dodge Flat BESS Addition, which was the most recent standalone BESS resource approved by the Commission in the Companies' Amendment to the Triennial 2024 Joint Integrated Resource Plan ("2024 Joint IRPA"), Docket No. 25-10028, the proposed project's LCOS is lower by approximately 16 percent. A comparison of the LCOS for all standalone battery storage projects presented for approval in this filing, relative to the Dodge Flat BESS Addition, is provided in REN-23: Standalone BESS LCOS Comparison Summary. All costs associated with the agreement are proposed to be recovered through Nevada Power's fuel and purchased power BTER mechanism.

According to estimates provided by the developer, during construction the project is expected to employ about 45 workers, with most jobs filled locally and performed using union labor. Engineering and permitting services are also planned to be sourced from Nevada-based firms. Construction is expected to generate approximately $3.9 million in labor income, $4.6 million in gross regional product, and $5.8 million in total economic output during the construction year. Annual operations and maintenance spending of about $0.8 million in Nevada is projected to support approximately 4 total jobs in Clark County, including direct and secondary employment. Ongoing operations are expected to generate about $0.8 million in labor income and roughly $0.5 million in gross regional product per year over the project's operating life.

Figure REN-5 shows a map of the project site.

FIGURE REN-5
Commerce Station Energy Storage Project Site

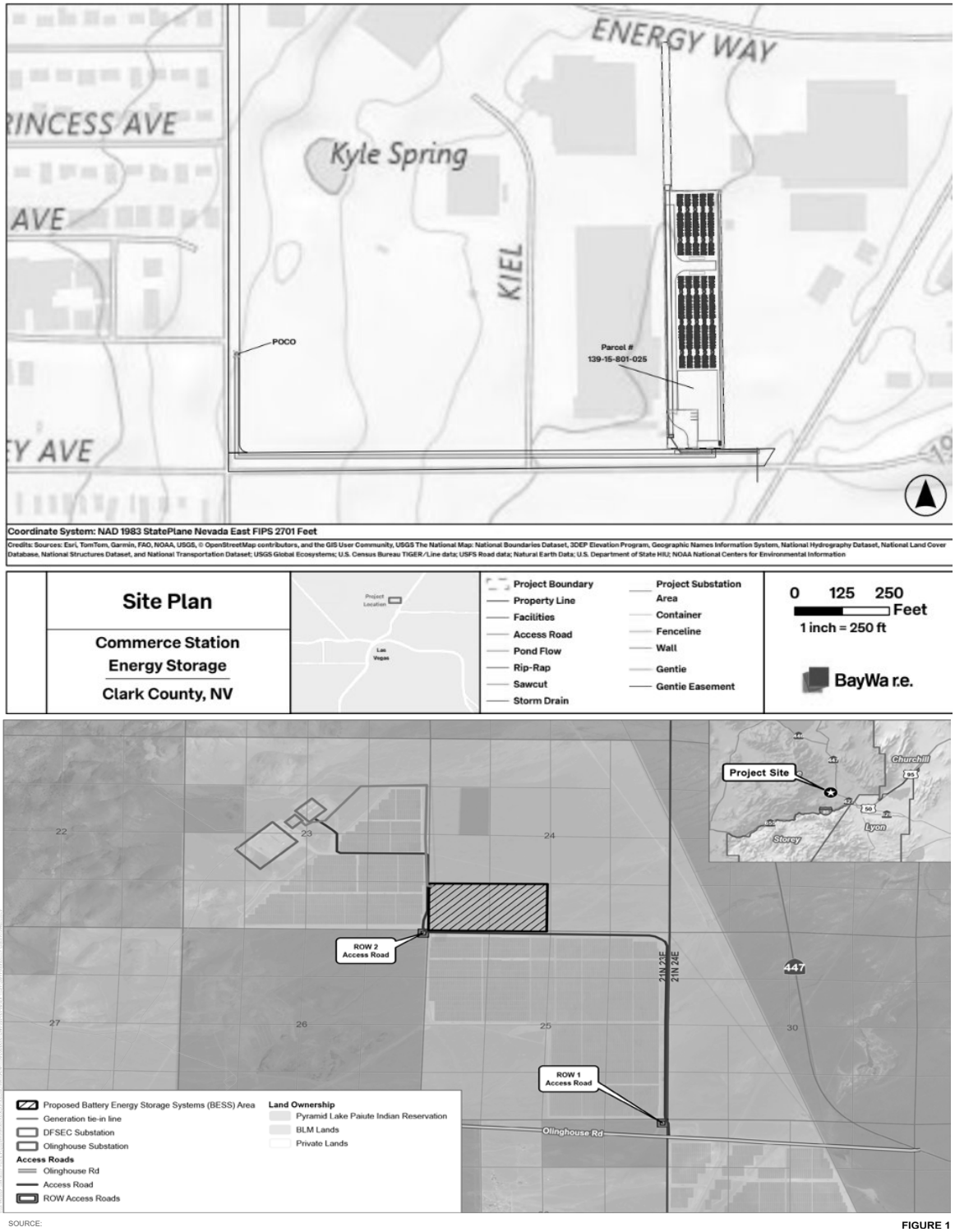

SOURCE:

FIGURE 1

A copy of the PPA can be found in Technical Appendix REN-6-CSB(a). The Companies' due diligence summary for the Commerce Station project is included as Confidential Technical Appendix REN-6-CSB(b). Technical Appendix REN-6-CSB(c) contains detailed information about the Commerce Station project, including the information required by NAC § 704.8885 and NAC § 704.8887, as well as NRS § 704.741. Key provisions of the Commerce Station PPA are summarized in Technical Appendix REN-6-CSB(d).

Coyote Energy 1

The Companies present the Coyote Energy 1 PPA ("Coyote Energy 1") that will provide 600 MW of solar PV generating capacity paired with a 600-MW, four-hour BESS resource in Nevada Power's system, with a COD of December 31, 2030. This project was bid into the Companies' 2024 RFP and was selected based on several factors including the Companies' due diligence assessment, system needs, and customer value. The project is sited on private land and has only a minimal length of its generation tie line subject to BLM permitting and therefore the DOI Review Policy Memorandum, mitigating the risk of schedule impact. The project will qualify for tax credits, which is reflected in the pricing, passing the value on to Nevada Power's customers for the contract term.

As a means to reduce the impact of potential non-delivery and to protect customers in the event of a development failure, the terms of the PPA require the developer to securitize the project through the posting of a development security prior to COD at escalating levels tied to key project milestones. Specifically, the developer is required to post $5 million in development security upon execution of the PPA, which increases to $36 million upon receipt of PUCN approval of the PPA, and increases further to $102 million upon the project receiving all BLM approvals (including NTP) necessary to start construction ("BLM Approval").

As discussed in this section's Part B above, given the uncertainty to project development and timeline posed by the DOI Review Policy Memorandum, the Companies were challenged to contract with counterparties willing to bear the risk of losing the development security due to such unprecedented external factors preventing their projects from reaching the intended COD. To facilitate a viable transaction, the Companies negotiated terms of the PPA that allow for the Companies to retain a portion of the development security if the PPA terminates due to the project's failure to obtain BLM Approval prior to June 30, 2028. The retained security amount was tailored specific to this PPA and set equal to $5 million. This balanced approach to development security structure is designed to strongly incentivize the developer to mitigate development risks and successfully deliver the project, while providing meaningful financial protection to customers in the event of contract non-performance or termination.

Key Project Characteristics:

The proposed Coyote Energy 1 project is a utility-scale solar PV and BESS facility located in southern Lincoln County, Nevada, near the Clark County boundary and east of U.S. Highway 93. The project is being developed by Coyote Energy 1, LLC, an affiliate of Estuary Power LLC ("Estuary Power"), a Nevada-based, majority woman-owned developer, owner, and operator of large-scale renewable and hybrid power projects across the western United States. Since 2013, the company has delivered or is developing more than 4.2 GW of utility-scale generation projects and associated energy storage systems. Estuary Power currently owns and operates 185 MW of renewable generation and 400 MWh of energy storage in Nevada with more than 3 GW of renewable and conventional generation under development.

The solar facility will utilize commercially proven PV modules mounted on single-axis tracking systems to optimize energy production. Energy generated by the solar facility will be delivered to the Companies' transmission system or stored in the co-located BESS for later dispatch. The battery system will employ lithium-ion technology with integrated monitoring, control, cooling, and safety systems, with guaranteed capacity and round trip efficiency rates through 20 years, providing dispatchable capacity, energy, and ancillary services.

Project facilities will be located on privately owned land controlled through executed option agreements with Coyote Springs Investment LLC, providing site control over approximately 8,300 acres for the initial project phase. The site has completed federal environmental review under a previously approved Environmental Impact Statement and is covered by an existing Multiple-Species Habitat Conservation Plan and associated Incidental Take Permit, significantly reducing environmental and permitting risk. Local land use approvals are in place through a development agreement with Lincoln County, and the project has received local government support. Coyote Energy 1 expects all studies to be complete in April or May and to submit the Draft Environmental Assessment in June 2026, with an anticipated approval of the Record of Decision in late 2026.

Coyote Energy 1 will interconnect to the Companies' transmission system at the Crystal Substation at 500 kV, through a new 500 kV generation tie-line primarily routed within an existing West-Wide Utility Corridor. The developer has executed a Provisional LGIA[38] for a 600-MW position, with an in-service date of December 1, 2029.

Under the agreement, solar energy will be purchased at a fixed price of $42.99 per MWh for a 25-year term, and BESS capacity will be purchased at a fixed rate of $14,930 per MW-month for a 20-year term. The Companies calculated the hybrid LCOE of this resource as $108.15 per MWh.

[38] A Provisional LGIA is an interim interconnection arrangement that allows a generating facility to connect and potentially operate before all transmission upgrades or final interconnection requirements are complete—at the project's risk to transmission-related curtailments.

Based on the deliverability assurance attributes described in this project's introductory paragraphs above, the project's pricing assumes that it will qualify for tax credits, and, therefore, is best compared to pricing of other paired solar and BESS projects bid in the 2024 RFP that, based on their risk to reaching COD before the end of 2030, are assumed to not qualify for solar tax credits. For perspective, the Companies calculated the average LCOE of other solar and BESS project proposals from the 2024 RFP that were not selected using the submitted cap pricing of the solar energy and found that this project's LCOE is 31 percent lower in comparison. A copy of the project LCOE comparison to average LCOE using solar cap pricing of non-selected solar and BESS project proposals is presented in Confidential Technical Appendix REN-24. All costs associated with the agreement will be recovered through Nevada Power's fuel and purchased power BTER mechanisms.

According to estimates provided by the developer, construction of the project is expected to support several hundred construction jobs, with a peak workforce of up to approximately 400 workers with an estimated average salary of $164,000 annually, equaling a total estimated payroll of $98 million. The project will create an estimated eight permanent operations and maintenance positions following commercial operation with an estimated average salary of $123,500 annually, equaling a total estimated payroll of $49 million over 25 years.

Figure REN-6 shows a map of the project site.

FIGURE REN-6
Coyote Energy 1 Project Site

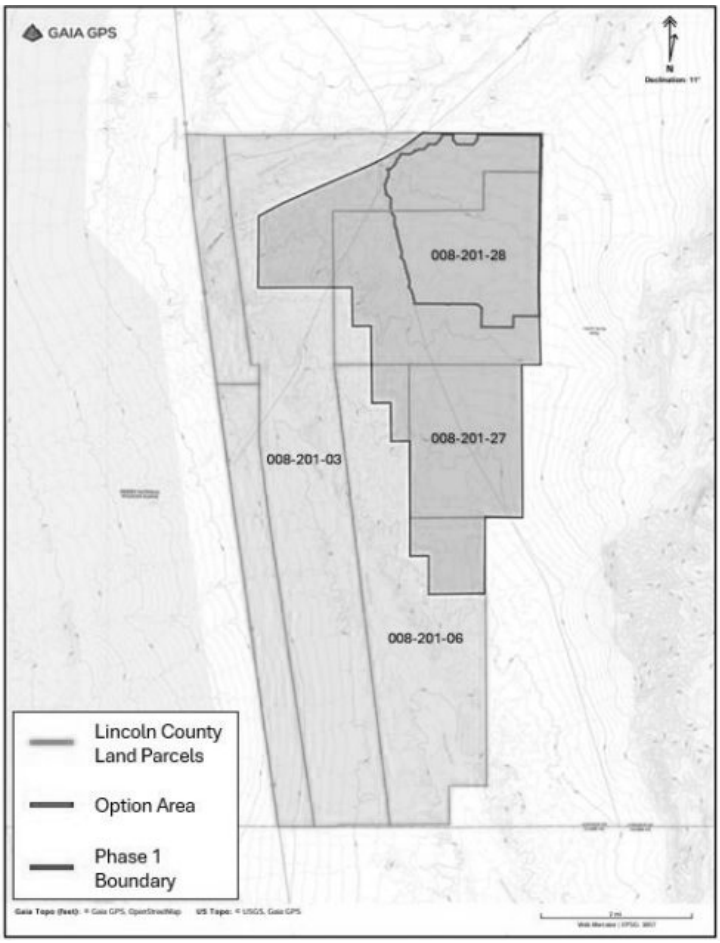

A copy of the PPA can be found in Technical Appendix REN-7-CE1(a). The Companies' due diligence summary for the Coyote Energy 1 project is included as Confidential Technical Appendix REN-7-CE1(b). Technical Appendix REN-7-CE1(c) contains detailed information about the Coyote Energy 1 project, including the information required by NAC § 704.8885, NAC § 704.8887 and § NRS 704.741. Key provisions of the Coyote Energy 1 PPA are summarized in Technical Appendix REN-7-CE1(d).

Dry Lake East Energy Storage II

The Companies present the Dry Lake East Energy Storage II PPA ("Dry Lake East Energy Storage II") that will provide for a 150-MW, 4-hour BESS resource in Nevada Power's system with a COD of December 31, 2027. This project was bid into the Companies' 2024 RFP and was selected based on several factors including the Companies' due diligence assessment, system needs, and customer

value. The project will be located adjacent to the Dry Lake East facility, a 200-MW solar and 200-MW BESS facility with a COD of December 2026 that was approved in the 2024 Joint IRP and is under contract with Nevada Power, but will be independently connected to Nevada Power's transmission system and will operate as a fully grid-charging standalone BESS resource. Dry Lake East Energy Storage II does not require any BLM or federal approvals subject to the DOI Review Policy Memorandum review process, thereby mitigating schedule risk due to permitting. The project will qualify for the ITC, including the additional Energy Community Tax Credit Bonus of 10 percent for projects meeting the eligibility criteria (e.g. being located in communities near coal-fired power plants that retired after December 31, 2029), which is reflected in the pricing, passing the value on to Nevada Power's customers for the contract term.

As a means to reduce the impact of potential non-delivery and to protect customers in the event of a development failure, the terms of the PPA require the developer to securitize the project through the posting of a development security prior to COD at escalating levels tied to key project milestones. Specifically, the developer is required to post $4.5 million in development security upon execution of the PPA, which increases to $12.75 million upon receipt of PUCN approval of the PPA. This development security structure is designed to strongly incentivize the developer to mitigate development risks and successfully deliver the project, while providing meaningful financial protection to customers in the event of contract non-performance or termination.

Key Project Characteristics:

The proposed Dry Lake East Energy Storage II project is a utility-scale BESS facility located in Clark County, Nevada, approximately 20 miles northeast of Las Vegas and adjacent to Interstate 15. The project is being developed by Dry Lake East Energy Storage II, LLC, an affiliate of NextEra Energy Resources, LLC ("NEER"), a leading renewable energy developer with extensive experience owning and operating utility-scale energy storage resources in Nevada and throughout North America[39].

The facility will utilize commercially proven lithium-ion battery technology in an AC-coupled configuration, including integrated power conversion systems, transformers, control equipment, and safety systems. The BESS will be capable of charging from and discharging to the Companies' system to provide dispatchable capacity, energy, and ancillary services, including frequency response and voltage support.

Project facilities will be located on approximately 48 acres of public lands administered by the BLM. The developer has secured site control through a successful BLM auction and holds an executed lease for the project area, as well as a right-of-way grant for access and collection

[39] The Companies have several active PPAs with affiliates of NEER, including Dodge Flat Solar Energy Center, Dodge Flat Energy Storage, Dry Lake East, and Fish Springs Ranch Energy Center.

facilities. Environmental diligence is well advanced, including completion of required environmental studies and preparation of an environmental plan, with no identified conditions that would preclude development.

Dry Lake East Energy Storage II will interconnect to the Companies' transmission system at the Harry Allen Substation at 230 kV via an approximately 3.5-mile generation tie-line. An LGIA has been executed, providing for 150 MW of interconnection capacity. Certain facilities, including the substation and gen-tie infrastructure, will be shared with the Dry Lake East facility, reducing development risk and improving overall infrastructure efficiency.

Under the agreement, BESS capacity will be purchased at a fixed rate of $13,930 per MW-month for a 20-year term. The Companies calculated the LCOS of this resource as $146.13 per MWh. When comparing the LCOS of this resource to the Dodge Flat BESS Addition, which was the most recent standalone BESS resource approved by the Commission in the 2024 Joint IRPA, Docket No. 25-10028, the proposed project's LCOS is lower by approximately 12 percent. A comparison of the LCOS for all standalone BESS projects presented for approval in this filing, relative to the Dodge Flat BESS Addition, is provided in REN-23: Standalone BESS LCOS Comparison Summary. All costs associated with the agreement will be recovered through Nevada Power's fuel and purchased power BTER mechanisms.

According to estimates provided by the developer, during construction, the project is expected to support approximately 40 jobs on average, with opportunities for local labor and vendors at an estimated average salary of $123,240 annually, equaling a total estimated payroll of $4.93 million over one construction year. Following commercial operation, the project will support a permanent long-term increase in the workforce for the operation and maintenance of the facility with an estimated three positions at an estimated average salary of $82,000 annually and a total payroll of $8.61 million over its operating life.

Figure REN-7 shows a map of the project site.

FIGURE REN-7
Dry Lake East Energy Storage II Project Site

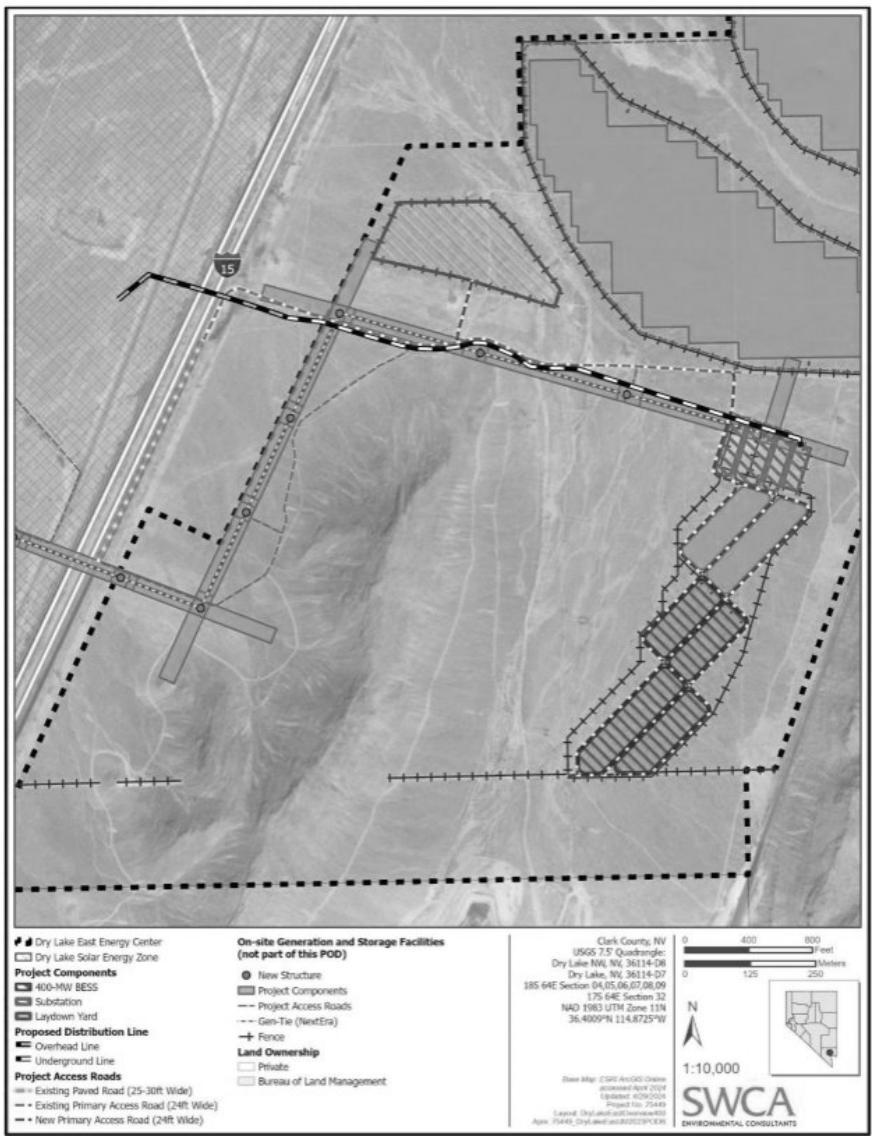

A copy of the PPA can be found in Technical Appendix REN-8-DLE2(a). The Companies' due diligence summary for the Dry Lake East Energy Storage II project is included as Confidential Technical Appendix REN-8-DLE2(b). Technical Appendix REN-8-DLE2(c) contains detailed information about the Dry Lake East Energy Storage II project, including the information required by NAC § 704.8885, NAC § 704.8887 and § NRS 704.741. Key provisions of the Dry Lake East Energy Storage II PPA are summarized in Technical Appendix REN-8-DLE2(d)

Fish Springs Ranch Energy Storage

The Companies present the Fish Springs Ranch Energy Storage PPA ("Fish Springs Ranch Energy Storage") that will provide for an additional 75-MW, 4-hour BESS resource in Sierra's system with a COD of December 31, 2027. This project was not bid into the Companies' 2024 RFP, but rather was the result of bilateral discussions with the developer's parent organization, NEER. As discussed in the Economic Analysis Section of the Supply Plan Narrative, the near-term in service date of this resource reduces reliability risk for Sierra.

The project will be located at the existing Fish Springs Ranch Solar Energy Center facility, a 100-MW solar and 25-MW BESS facility, also under contract with Sierra. [40] With the addition of the 75-MW BESS, the total facility will reach a 1:1 solar to BESS ratio. The BESS will utilize existing infrastructure from the Fish Springs Ranch Solar Energy Center facility, resulting in minimal interconnection costs and mitigation of schedule risk due to permitting delays. The project will qualify for the ITC, which is reflected in the pricing, passing the value on to Sierra's customers for the contract term.

As a means to reduce the impact of potential non-delivery and to protect customers in the event of a development failure, the terms of the PPA require the developer to securitize the project through the posting of a development security prior to COD at escalating levels tied to key project milestones. Specifically, the developer is required to post $2.25 million in development security upon execution of the PPA, which increases to $6.38 million upon receipt of PUCN approval of the PPA. This development security structure is designed to strongly incentivize the developer to mitigate development risks and successfully deliver the project, while providing meaningful financial protection to customers in the event of contract non-performance or termination.

Key Project Characteristics:

The proposed Fish Springs Ranch Energy Storage project is a utility-scale BESS facility located in unincorporated Washoe County, Nevada, north of Reno and co-located with the operating Fish Springs Ranch Solar facility. The project is being developed by Fish Springs Ranch Energy Storage, LLC, an affiliate of NEER, discussed above.

The facility will utilize commercially proven lithium-ion battery technology in an AC-coupled configuration, including integrated inverters, transformers, control systems, and safety equipment. The BESS facility will be capable of charging from and discharging to the Companies' transmission system to provide dispatchable capacity, energy, and ancillary services.

Project facilities will be located on approximately 8.5 acres of private land within the same parcel as the existing Fish Springs Ranch Solar Energy Center facility. Site control is secured through an

[40] Approved in the 2018 Integrated Resource Plan, Docket No. 18-06003.

executed lease agreement with the landowner, with an amendment in progress to incorporate the additional area required for the BESS facilities. The project will utilize and share existing infrastructure, including access roads, easements, water access, and the on-site collector substation, thereby minimizing incremental land disturbance and development risk. The project is located entirely on private land and does not require federal permits or rights-of-way. Required state and local permits include a special use permit, grading permit, building permit, hazardous materials storage permit, and air quality permits, all of which are administrative in nature. Environmental reviews previously completed for the existing solar facility identified no conditions that would preclude development, and no material environmental constraints are anticipated for the BESS addition.

Fish Springs Ranch Energy Storage will interconnect to the Companies' transmission system at the Fort Sage Substation at 345 kV through an existing generation tie-line of approximately 700 feet. An LGIA is currently in place for the Fish Springs Ranch Solar Energy Center facility, and the BESS project will utilize surplus BESS capacity available under the existing interconnection agreement through a proposed material modification. No transmission network upgrades or additional interconnection facilities are anticipated to be required.

Under the agreement, BESS capacity will be purchased at a fixed rate of $16,550 per MW-month for a 20-year term. The Companies calculated the LCOS of this resource as $162.79 per MWh. When comparing the LCOS of this resource to the Dodge Flat BESS Addition, which was the most recent standalone BESS resource approved by the Commission in the 2024 Joint IRPA, Docket No. 25-10028, the proposed project's LCOS is lower by over 2 percent. A comparison of the LCOS for all standalone BESS projects presented for approval in this filing, relative to the Dodge Flat BESS Addition, is provided in Technical Appendix REN-23: Standalone BESS LCOS Comparison Summary. All costs associated with the agreement are proposed to be recovered through Sierra's fuel and purchased power BTER mechanisms.

According to estimates provided by the developer, during construction, the project is expected to support a temporary increase in workforce of an estimated 35 positions at an estimated average salary of $123,240 annually, equaling a total estimated payroll of $4.31 million over one construction year. Following commercial operation, the project will support a permanent long-term increase in the workforce for the operation and maintenance of the facility with an estimated two positions at an estimated average salary of $82,000 annually and a total payroll of $5.74 million over its operating life.

Figure REN-8 shows a map of the project site.

FIGURE REN-8
Fish Springs Ranch Energy Storage Project Site

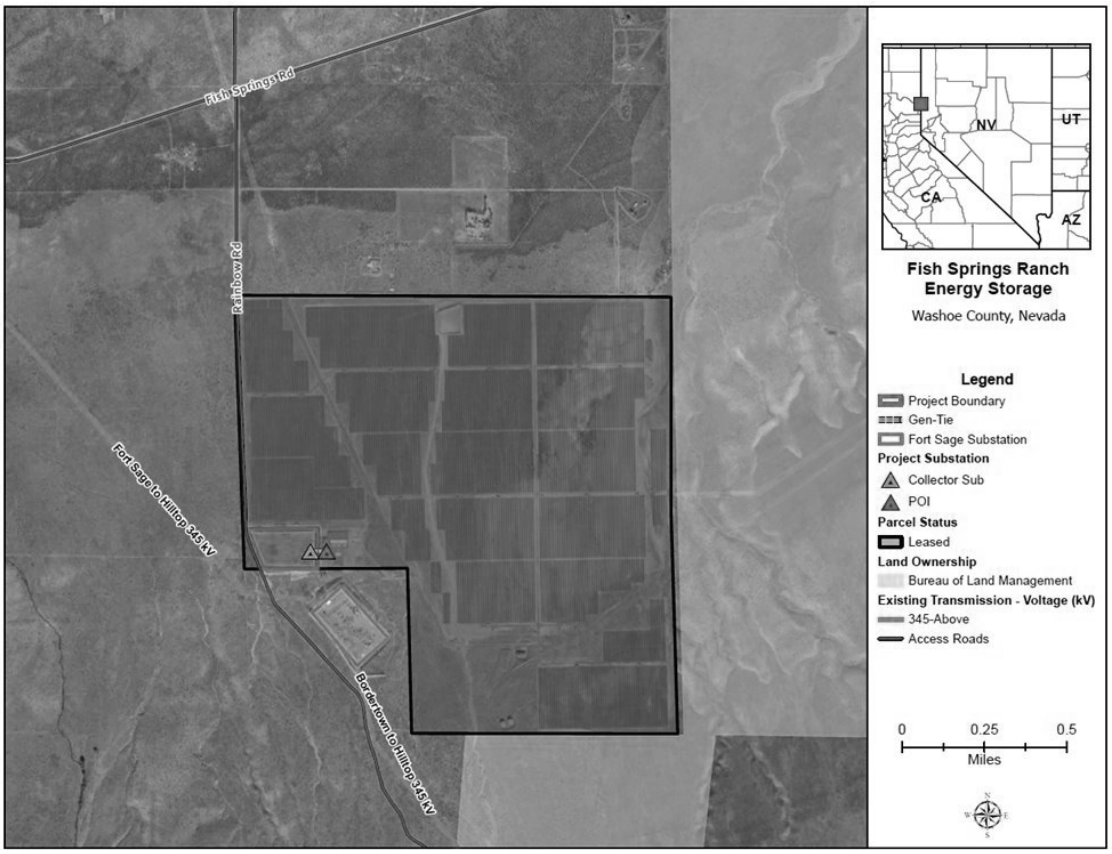

A copy of the PPA can be found in Technical Appendix REN-9-FSR(a). The Companies' due diligence summary for the Fish Springs Ranch Energy Storage project is included as Confidential Technical Appendix REN-9-FSR(b). Technical Appendix REN-9-FSR(c) contains detailed information about the Fish Springs Ranch Energy Storage project, including the information required by NAC § 704.8885, NAC § 704.8887 and § NRS 704.741. Key provisions of the Fish Springs Ranch Energy Storage PPA are summarized in Technical Appendix REN-9-FSR(d).

Hot Pot Energy Center and Iron Point Energy Center

The Companies present the Hot Pot Energy Center ("Hot Pot") PPA and Iron Point Energy Center ("Iron Point") PPA, together as part of sleeved PPAs associated with customer energy agreements. The Hot Pot Energy Center will consist of approximately 350 MW of solar PV generating capacity paired with 350 MW of BESS capacity with a four-hour duration. The Iron Point Energy Center will consist of approximately 250 MW of solar PV generating capacity paired with 250 MW of BESS capacity with a four-hour duration. The expected CODs for Hot Pot Energy Center and Iron Point Energy Center are October 31, 2029, and December 31, 2029, respectively. These PPAs

represent the second iterations of the Hot Pot Energy Center and Iron Point Energy Center projects for the Commission's review. The previous Hot Pot Energy Center and Iron Point Energy Center PPAs, as approved in Docket No. 21-06001, terminated on June 22, 2023, due to several issues encountered by the developer including global supply chain issues and significant cost increases for materials due to the Covid-19 pandemic. These projects were bid into the Companies' 2024 RFP but were not selected due to a fatal flaw determination from a lack of firm available transmission capacity at the time the bid projects intended to reach their CODs. The counterparty to the sleeved PPA, Amazon Data Services, Inc. ("Amazon)", then brought these projects forward to the Companies on a bilateral basis as a resource dedicated to serve their customer-specific load. Under the PPAs and their associated customer agreements, the project, and/or the counterparty to the sleeved PPA, will bear all risk associated with non-compensable transmission curtailments.[41]

As a means to reduce the impact of potential non-delivery and to protect customers in the event of a development failure, the terms of the PPA require the developer to securitize the project through the posting of a development security prior to COD at escalating levels tied to key project milestones. Specifically for Hot Pot, the developer is required to post $21 million in development security upon execution of the PPA, which increases to $59.5 million upon receipt of PUCN approval of the PPA. Specifically for Iron Point, the developer is required to post $15 million in development security upon execution of the PPA, which increases to $42.5 million upon receipt of PUCN approval of the PPA.

As discussed in this section's Part B above, given the uncertainty to project development and timeline posed by the DOI Review Policy Memorandum, the Companies' were challenged to contract with counterparties willing to bear the risk of losing the development security due to such unprecedented external factors preventing their projects from reaching the intended COD. To facilitate a viable transaction, the Companies negotiated terms of the PPAs that allow for the Companies to retain a portion of the development security if the PPA terminates due to the project's failure to obtain Full Notice to Proceed ("FNTP") authorization from the BLM prior to June 30, 2028. The retained security amount was tailored specific to the Hot Pot PPA and set equal to $21 million, and the retained security amount was tailored specific to the Iron Point PPA and set equal to $15 million. This balanced approach to development security structure is designed to strongly incentivize the developer to mitigate development risks and successfully deliver the project, while providing meaningful financial protection to customers in the event of contract non-performance or termination. Furthermore, as these are sleeved PPAs associated with a customer agreement, the PPAs also contain a provision that in the event of non-receipt of PUCN approval of the customer agreement by the one year anniversary of receipt of PUCN approval of the PPAs, then the PPAs may terminate with no liability to either party.

[41] Under the terms of the PPA, all curtailments that are not economic curtailments are non-compensable.

Key Project Characteristics – Hot Pot Energy Center:

The proposed Hot Pot Energy Center project is a utility-scale solar PV and BESS facility located in Humboldt County, Nevada. The project is being developed by Hot Pot Solar, LLC, an affiliate of Primergy Solar, the developer of the Sleepy Orange project discussed above. The project is within Sierra's service territory.

The solar facility will utilize commercially proven PV modules mounted on single-axis tracking systems to optimize energy production. Energy generated by the solar facility will be delivered to Sierra's transmission system or stored in the co-located BESS for later dispatch. The BESS component will utilize lithium-ion technology and will be capable of providing dispatchable capacity, energy, and ancillary services.

Project facilities will be located on approximately 2,200 acres of rural land, consisting primarily of privately held property secured under a long-term lease arrangement, with limited easements across BLM land for access roads and a transmission line segment. All local land use approvals have been obtained, including issuance of a conditional use permit from Humboldt County. Environmental studies addressing biological, cultural, hydrological, and geotechnical conditions at the site have been completed, and no material environmental constraints have been identified that would preclude construction or operation of the facility. Remaining federal land use permits for access and a transmission line segment are in process.

The Hot Pot Energy Center project will interconnect to Sierra's transmission system at the Valmy Substation at 345 kV via a permitted generation tie-line. An LGIA has been executed, and subsequent amendments are expected to confirm an in-service date in 2029. The project is designed to operate compatibly with other resources interconnected at the Valmy Substation and will provide ancillary services to support system reliability.

The Companies propose to execute a PPA with Hot Pot Solar, LLC for the output of the generating facility and the BESS facility for a 20-year term, which will be dedicated to a customer through a sleeved PPA and associated customer agreement. Under the sleeved PPA and associated customer agreement, energy from the solar facility will be purchased at a fixed rate of $36.00 per MWh, and BESS capacity will be purchased at a fixed rate of $13,250 per MW-month. The Companies calculated the hybrid LCOE as $105.31 per MWh. All costs associated with the customer agreement are proposed to be recovered through the sleeved PPA associated with the customer agreement.[42]

[42] As a sleeved PPA associated with a customer agreement, no costs associated with the PPA will be recovered through the respective Company's fuel and purchased power BTER mechanisms as would be the case for PPAs serving non-customer-specific loads..

According to estimates provided by the developer during construction, the project is expected to support several hundred jobs, with peak employment exceeding 500 workers of which an estimated 440 will be sourced locally from Nevada. The project will utilize union labor under executed work site agreements. Estimated salaries for the construction jobs are anticipated to be $139,360 annually, with a total annual payroll of $61.32 million. A long-term increase in workforce for the operations and maintenance of the facility is an estimated four permanent positions at an estimated average salary of $135,200 annually and a total payroll of $13.52 million over 25 years.

Figure REN-9 shows a map of the project site.

FIGURE REN-9
Hot Pot Energy Center Project Site

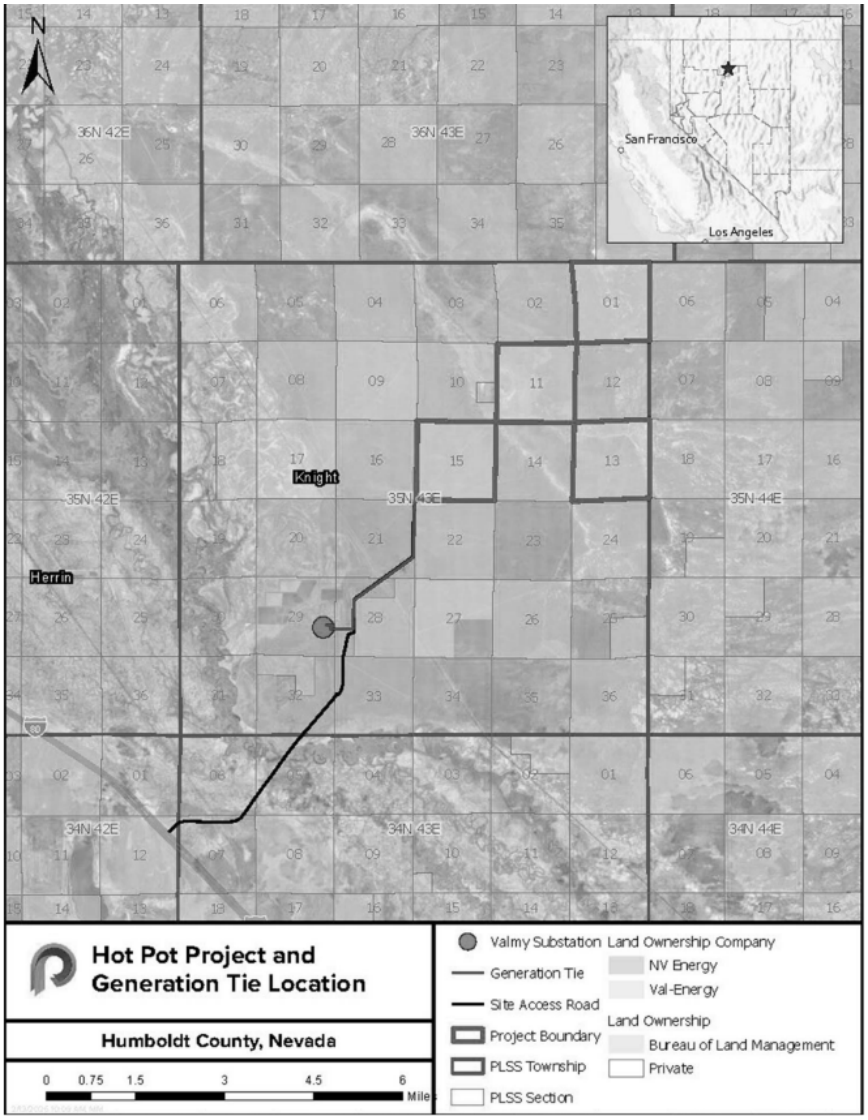

A copy of the PPA can be found in Technical Appendix REN-10-HPE(a). The Companies' due diligence summary for the Hot Pot Energy Center project is included as Confidential Technical Appendix REN-10-HPE(b). Technical Appendix REN-10-HPE(c) contains detailed information about the Hot Pot Energy Center project, including the information required by NAC § 704.8885, NAC § 704.8887 and § NRS 704.741. Key provisions of the Hot Pot Energy Center PPA are summarized in Technical Appendix REN-10-HPE(d).

Key Project Characteristics – Iron Point Energy Center:

The proposed Iron Point Energy Center project is a utility-scale solar PV and BESS facility located in Humboldt County, Nevada. The project is being developed by Iron Point Solar, LLC, an affiliate of Primergy Solar, the developer of the Sleepy Orange project discussed above. The project is within Sierra's service territory.

The solar facility will utilize commercially proven PV modules mounted on single-axis tracking systems to maximize energy production. Energy generated by the facility will either be delivered directly to Sierra's system or stored in the co-located BESS for later dispatch. The BESS component will utilize lithium-ion technology and will be capable of providing dispatchable capacity, energy, and ancillary services.

Project facilities will be located on approximately 1,400 acres of rural land consisting primarily of privately held property secured under a long-term lease arrangement, with limited BLM land crossings for access roads and a transmission line segment. All required local land use approvals have been obtained, including issuance of a conditional use permit from Humboldt County. Environmental studies addressing biological, cultural, hydrological, and geotechnical resources have been completed, and no material environmental constraints have been identified that would preclude construction or operation of the project. Remaining federal land use permits for access and transmission facilities are in process.

The Iron Point Energy Center project will interconnect to Sierra's transmission system at the Valmy Substation via a permitted generation tie-line. An LGIA has been executed, and amendments are expected to confirm an in-service date in 2029. The project is designed to provide ancillary services to support transmission system reliability.

The Companies propose to execute a PPA with Iron Point Solar, LLC for the output of the generating facility and the BESS facility for a 20-year term, which will be dedicated to a customer through a sleeved PPA associated with a customer agreement. Under the sleeved PPA and associated customer agreement, energy from the solar facility will be purchased at a fixed rate of $36.00 per MWh, and BESS capacity will be purchased at a fixed rate of $13,250 per MW-month. The Companies calculated the hybrid LCOE as $106.05 per MWh. All costs associated with the

customer agreement are proposed to be recovered through the sleeved PPA associated with the customer agreement.[43]

According to estimates provided by the developer during construction, the project is expected to support several hundred jobs, including peak construction employment exceeding 400 workers of which an estimated 360 will be sourced locally from Nevada. The project will utilize union labor under negotiated work site agreements. Estimated salaries for the construction jobs are anticipated to be $139,360 annually, with a total annual payroll of $50.17 million. A long-term increase in workforce for the operations and maintenance of the facility is an estimated four permanent positions at an estimated average salary of $135,200 annually and a total payroll of $10.8 million over 20 years.

Figure REN-10 shows a map of the project site.

[43] *Id.*

FIGURE REN-10
Iron Point Energy Center Project Site

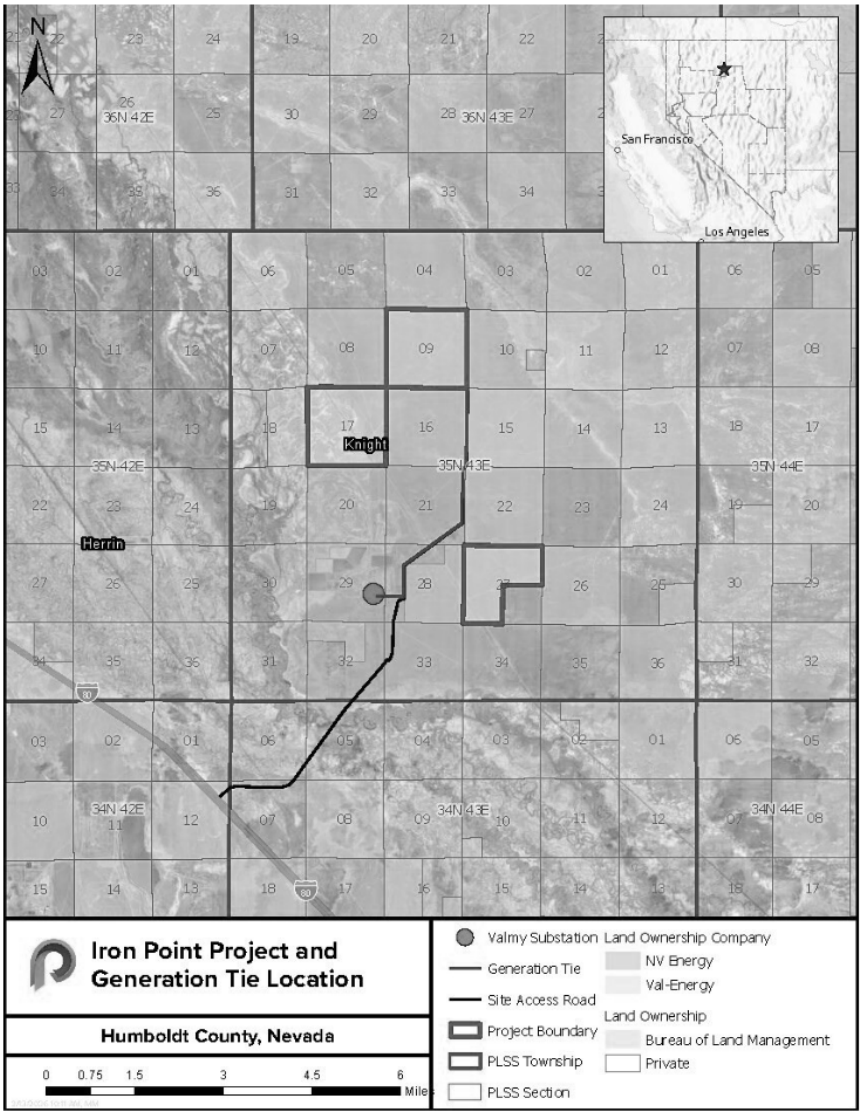

A copy of the PPA can be found in Technical Appendix REN-11-IPE (a). The Companies' due diligence summary for the Iron Point Energy Center project is included as Confidential Technical Appendix REN-11-IPE(b). Technical Appendix REN-11-IPE(c) contains detailed information about the Iron Point Energy Center project, including the information required by NAC § 704.8885, NAC § 704.8887 and § NRS 704.741. Key provisions of the Iron Point Energy Center PPA are summarized in Technical Appendix

REN-11-IPE(d). Jersey Valley Solar and Storage

The Companies present the Jersey Valley Solar and Storage PPA ("Jersey Valley"), a 67-MW solar PV facility paired with a 67-MW, four-hour BESS in Sierra's system, with a targeted COD of January 10, 2028. The project was bid into the Companies' 2024 RFP and selected based on several factors including the Companies' due diligence assessment, system needs, and customer value. The project is one of the very few bids received in the 2024 RFP involving generating resources that are located entirely on private land, including site access roads and generation tie-line routes. Thus, the risk of permitting delays associated with DOI Review Policy Memorandum impacts is eliminated, and the project is well positioned to reach COD in time to secure the available solar tax credits and pass the value on to Sierra's customers for the contract term. The resource will add cost-competitive, dispatchable capacity to Sierra's portfolio, helping address systemwide open capacity needs identified for the 2028 period and beyond. As discussed in the Economic Analysis Section of the Supply Plan Narrative, the near-term in-service date of this resource reduces reliability risk for Sierra. As discussed in the Transmission Section of the Supply Plan Narrative, the project requires minimal network upgrades.

As a means to reduce the impact of potential non-delivery and to protect customers in the event of a development or performance failure, the terms of the PPA require the developer to securitize the project through the posting of a development security prior to COD at escalating levels tied to key project milestones. Specifically, the developer is required to post $4.03 million in development security upon execution of the PPA, which increases to $11.42 million upon receipt of PUCN approval of the PPA.

Due to new local requirements faced by the developer resulting from Lander County's issuance (and subsequent extension) of a temporary moratorium[44] on solar projects, the Companies' were challenged to contract with the counterparty as they were not willing to bear the risk of losing the development security due to uncertainty in obtaining a Special Use Permit ("SUP") from Lander County necessary for the project to reach its intended COD. To facilitate a viable transaction, the Companies negotiated terms of the PPA that allow for the Companies to retain a portion of the development security if the PPA terminates due to the project's failure to obtain an SUP prior to June 25, 2027. The retained security amount was tailored specific to this PPA and set equal to $750,000. This balanced approach to development security structure is designed to strongly incentivize the developer to mitigate development risks and successfully deliver the project, while providing meaningful financial protection to customers in the event of contract non-performance or termination.

Key Project Characteristics:

[44] Lander County, NV, *Board of Commissioners Meeting*, July 24, 2025, available at https://cms1files.revize.com/landercounty25/07-24-25%20Packet%20(1).pdf

The project is owned by ORNI 45, LLC, a subsidiary of Ormat Technologies, Inc. ("Ormat Technologies"), which will oversee the project's development, construction, and operation. Ormat Technologies is a global renewable energy company with approximately 60 years of experience and established core competencies in engineering, procurement, and construction ("EPC"), operations and maintenance ("O&M"), and project finance. Through these capabilities, Ormat Technologies has developed, owns, and operates approximately 1.16 GW of geothermal, energy storage, solar PV, and recovered energy generation facilities worldwide. Ormat Technologies is headquartered in Reno, Nevada, with additional offices in Philadelphia, Pennsylvania, and in Israel.

The Jersey Valley project will be located on approximately 470 acres of private land in Lander County, Nevada, within Sierra's service territory, and will interconnect at the adjacent Bannock Substation at 120 kV. As discussed in the Transmission Section of the Supply Plan Narrative, the project requires minimal network upgrades. While the project has no federal nexus and therefore avoids BLM permitting risk, Lander County currently has a moratorium on solar development, and the developer continues to work with the county officials on obtaining necessary approvals to authorize the land use to enable the project to start construction. To mitigate the risk of non-delivery, the Companies negotiated a provision in the PPA that allows limited extension of critical project milestones if obtainment of the County special use permit is delayed.

The solar facility will utilize commercially proven bifacial PV technology mounted on single-axis tracking systems. The BESS will employ lithium-ion technology in an AC-coupled configuration. The combined facility is designed to deliver renewable energy, dispatchable capacity, and ancillary services. The project will use existing interconnection rights under a previously executed LGIA held by Ormat affiliates. The developer anticipates working through the transmission process to amend the LGIA to reassign unused geothermal interconnection capacity to the project.

Under the agreement, energy from the solar generating facility would be purchased for a 25-year term at a fixed price of $34.65 per MWh, and capacity from the BESS facility would be purchased for a 20-year term at a fixed rate of $13,950 per MW-month. The Companies calculated the hybrid LCOE as $106.05 per MWh. Based on the deliverability assurance attributes described in this project's introductory paragraphs above, the project's pricing assumes that it will qualify for tax credits, and, therefore, is best compared to pricing of other paired solar and BESS projects bid in the 2024 RFP that, based on their risk to reaching COD before the end of 2030, are assumed to not qualify for solar tax credits. For perspective, the Companies calculated the average LCOE of other solar and BESS project proposals from the 2024 RFP that were not selected using the submitted cap pricing of the solar energy and found that this project's LCOE is 32 percent lower in comparison. A copy of the project LCOE comparison to average LCOE using solar cap pricing of non-selected solar and BESS project proposals is presented in Confidential Technical Appendix REN-24. All costs associated with the agreement will be recovered through Sierra's fuel and purchased power BTER mechanisms.

According to estimates provided by the developer, during the construction phase, the project is expected to support approximately 250 jobs, with an estimated 150 positions filled by Nevada residents, generating nearly $9 million in local payroll over one year. Once operational, the project will create seven permanent operations and maintenance positions with average annual salaries of approximately $80,000, resulting in more than $20 million in cumulative payroll over the project's operating life. In addition to workforce impacts, the project will contribute ongoing property tax revenues to Lander County and generate sales tax revenue through the purchase of local goods and services. These economic impacts support local communities while contributing to Nevada's renewable energy infrastructure and long-term economic development.

Figure REN-11 shows a map of the project site.

FIGURE REN-11
Jersey Valley Solar and Storage project Site

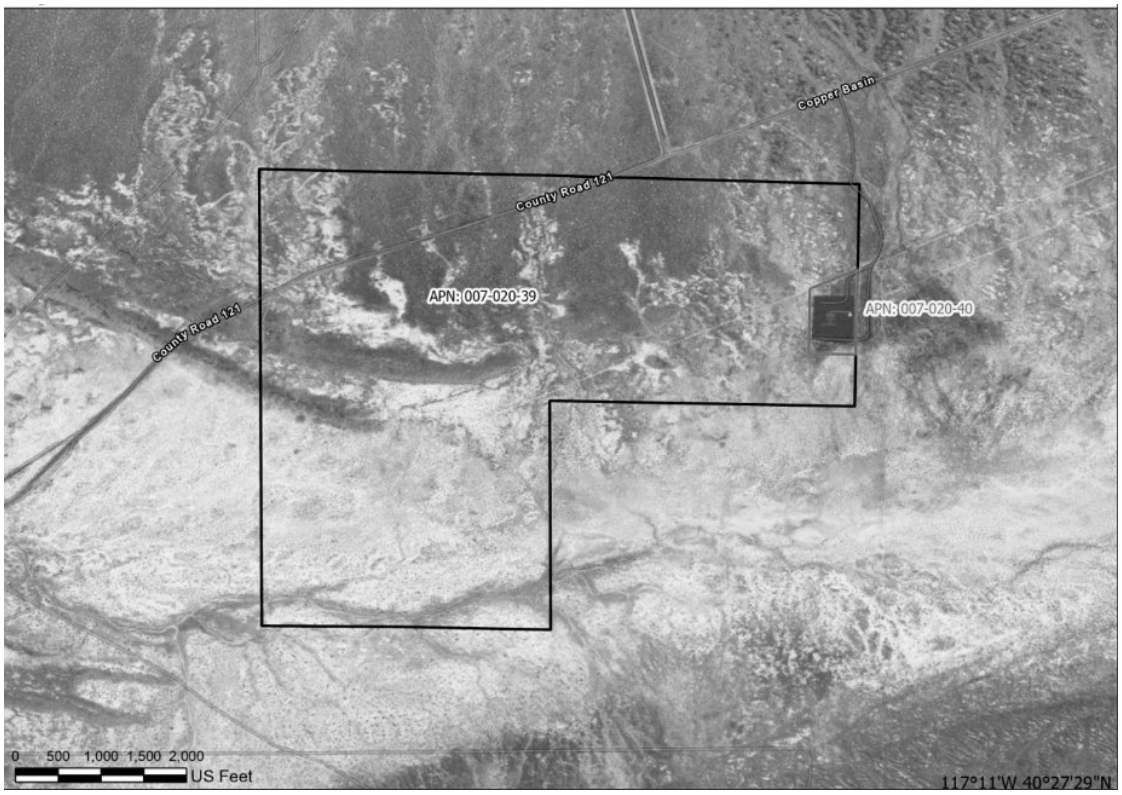

A copy of the PPA can be found in Technical Appendix REN-12-JVS(a). The Companies' due diligence summary for the Jersey Valley Solar and Storage project is included as Confidential Technical Appendix REN-12-JVS(b). Technical Appendix REN-12-JVS(c) contains detailed information about the Jersey Valley Solar and Storage project, including the information required

by NAC § 704.8885, NAC § 704.8887 and § NRS 704.741. Key provisions of the Jersey Valley Solar and Storage PPA are summarized in Technical Appendix REN-12-JVS(d).

Libra Solar & Storage Project Third Amendment

The Companies present the Libra Solar & Storage Project Third Amendment ("Libra Third Amendment") that will provide for an additional 200-MW BESS capacity in contract years 21 through 25, beginning on January 1, 2048. Under the Libra Solar & Storage Project ("Libra") PPA currently in effect, this incremental BESS capacity was not under contract for those contract years.[45] The technology and characteristics of the proposed incremental BESS will be consistent with Libra's overall project design and operation, as presented and previously approved in the 2024 Joint IRP, Docket No. 24-05041. The requested additional 200-MW, 4-hour BESS will add 800 MWh of energy storage capacity to Libra's 700-MW solar PV facility, adding flexibility to absorb additional solar energy in the latter years and mitigate curtailments.

Since the Libra PPA was approved, the Libra project has faced increased cost challenges driven by external factors, including multi-month permitting delays due to the impact of the DOI Review Policy Memorandum, increased BLM lease costs due to the OBBBA, and evolving OBBBA-related Foreign Entity of Concern ("FEOC") tax and other regulations requiring supply chain shifts and trade policy impacts on key equipment.[46] However, as proposed in the Libra Third Amendment, the project has now received NTP from the BLM,[47] vetted its supply chain, locked in major equipment and construction pricing, and incorporated all regulatory and policy changes into final costs—eliminating further exposure to these drivers. The additional BESS capacity will add value to the Companies' system[48] while assuring delivery of the resource by providing targeted, time-limited additional BESS payments that will partially offset discrete project cost increases and allow the Libra project to continue development and reach its planned COD.

[45] The Libra Solar and Storage Project PPA requires an Expected Storage Facility Nameplate Capacity Rating of 700 MW in contract years 1-20, and an Expected Storage Facility Nameplate Capacity Rating of 500 MW in contract years 21-25; i.e. while the actual BESS capacity available after allowable degradation in contract years 21-25 is unknown, the Companies and its customers are only guaranteed 500 MW in those latter years.

[46] One Big Beautiful Bill Act, Pub. L. No. 119-21 (2025). OBBBA added new restrictions to clean electricity credits under Internal Revenue Code Sections 45Y and 48E, and the advanced manufacturing production credit under Section 45X to determine eligibility for credits. See Internal Revenue Service, IR-2026-23 (Feb. 12, 2026), Treasury, IRS Provide Guidance for certain energy tax credits regarding material assistance provided by prohibited foreign entities under the One, Big, Beautiful Bill. Also, see *infra* the Renewable and Storage Candidate Resource Pricing Outlook part of this Renewables Section, for a description of FEOC and its impacts.

[47] BLM National NEPA Register, *Libra solar Project Modifications*, December 15, 2025, available at https://eplanning.blm.gov/Project-Home/?id=f58d6bf4-a7f2-f011-8407-001dd80bcf93

[48] The PPA is with Nevada Power, but located in Sierra's territory, and, therefore ,can provide value to both systems in the form of ancillary services, energy, capacity, and renewable energy benefits.

In the Libra Third Amendment, no changes are proposed to the development security requirements of the Libra PPA previously approved in Docket No. 24-05041.[49]

Key Project Characteristics:

The current developer of the Libra project is SB Energy.[50] SB Energy is a U.S.-based renewable energy developer and owner with utility-scale solar and energy storage projects in operation and under construction across the United States. Founded in 2019, SB Energy is backed by SoftBank Group Corp. and other institutional investors. The company has a portfolio of over five gigawatts of energy projects operating and under construction and has raised over ten billions of dollars in project-level financing. SB Energy's development pipeline includes more than 15 GW of solar generation and multiple gigawatts of energy storage, in addition to related digital infrastructure projects.

The payments for the additional BESS will not begin until 2048, contract year 21, and will be fixed at a rate of $24,620 per MW-month, for a duration of 5 years. Because the payments will be made at a future time, the Companies calculated the present value of the future payments using Nevada Power's Weighted Average Cost of Capital ("WACC"), resulting in a net present value of $5,088 per MW-month for contract year 21 (the first year of the term). However, the nature of the project's payments set to begin more than 20 years in the future, coupled with the contract's short 5-year term length, are unique and are not comparable to any other projects in this filing. Therefore, to present an appropriate metric, the Companies incorporated the new BESS into the Libra project's LCOE evaluation, and calculated the hybrid LCOE for the combined Libra and the Libra Third Amendment projects as $101.46 per MWh.[51] Based on the deliverability assurance attributes described in this project's introductory paragraphs above, the project's pricing assumes that it will qualify for tax credits, and, therefore, is best compared to pricing of other paired solar and BESS projects bid in the 2024 RFP that, based on their risk to reaching COD before the end of 2030, are assumed to not qualify for solar tax credits. For perspective, the Companies calculated the average LCOE of solar and BESS project proposals from the 2024 RFP that were not selected using the submitted cap pricing of the solar energy and found that this project's LCOE is 35 percent lower in comparison. A copy of the project LCOE comparison to average LCOE using solar cap pricing of non-selected solar and BESS project proposals is presented in Technical Appendix REN-24.

[49] The Companies currently hold a Letter of Credit in the amount of $98 million as development security for the Libra Solar and Storage Project PPA.
[50] On March 21, 2025, SB Energy acquired the Libra Solar and Storage Project from Arevia Power LLC.
[51] As presented in Docket No. 24-05041, the Companies calculated the hybrid LCOE of the Libra Solar and Storage Project as $93.69 per MWh.

All costs under the amended agreement would continue to be recovered through Nevada Power's fuel and purchased power BTER mechanisms.[52]

Based on the developer's current estimates, during construction the entire Libra Solar & Storage Project, including the 200-MW BESS addition contemplated in the Libra Third Amendment, is expected to support approximately 725 jobs, of which an estimated 50 percent of positions will be sourced locally from Nevada at an estimated average salary of $104,000 annually, equaling a total estimated payroll of $37.75 million over one construction year. Following commercial operation, the project will support a permanent long-term increase in the workforce for the operation and maintenance of the facility of an estimated 10 positions at an estimated average salary of $62,400 annually and a total payroll of $21.45 million over its operational life.

Figure REN-12 shows a map of the project site.

[52] While the Commission approved the Libra Solar & Storage Project PPA without allocating its energy, capacity, and PCs to either Nevada Power or Sierra in Docket No. 24-05041, the Companies assume 100 percent allocation to Nevada Power for analyses conducted in this Part E.

FIGURE REN-12
Libra Solar and Storage Project Site

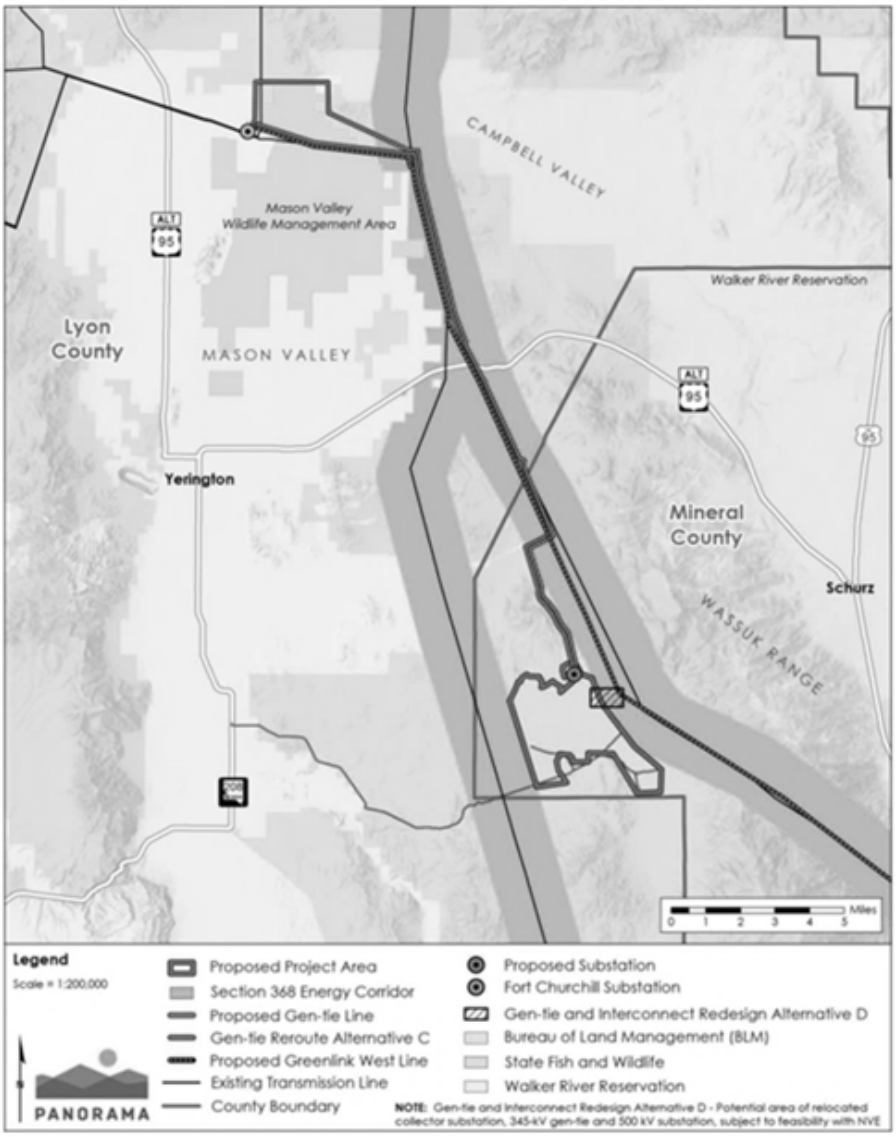

A copy of the PPA Amendment can be found in Technical Appendix REN-13-LSA(a). The Companies' due diligence summary for the Libra Solar and Storage Project PPA Third Amendment is included as Confidential Technical Appendix REN-13-LSA(b). Technical Appendix REN-13-LSA(c) contains detailed information about the Libra Solar & Storage Project Third Amendment PPA, including the information required by NAC § 704.8885, NAC § 704.8887 and § NRS 704.741.

Lux Solar Center

The Companies present the Lux Solar Center PPA ("Lux Solar Center"), a 125-MW solar PV facility paired with a 125-MW, four-hour BESS in Sierra's territory with a targeted COD of July 1, 2028. The project was bid into the Companies' 2024 RFP and selected based on several factors including the Companies' due diligence assessment, system needs, and customer value. The project is one of the very few bids received in the 2024 RFP involving projects that are located entirely on private land, including site access roads and generation tie-line routes. Thus, the risk of permitting delays associated with DOI Review Policy Memorandum impacts is eliminated, and the project is well positioned to reach COD in time to secure the available solar tax credits and pass the value on to Sierra's customers for the contract term.

A portion of the land intended for development of the project site is pending the issuance of a Conditional Use Permit ("CUP") from Lyon County authorizing construction activities, jeopardizing project viability. However, given the certainty this project brings in terms of near-term deliverability in Sierra's system and tax credit eligibility, the Companies worked with the developer to create a solution that mitigates the project non-deliverability risk stemming from the pending CUP issuance. The PPA includes a provision that if the county permit is not approved, the solar PV and BESS capacity will each be reduced to 121 MW in size, and the price of the solar resource will increase slightly. The reduction in buildable project area will reduce the direct-current ("DC") capacity of the solar facility, affecting the annual supply amount and overall project economics, thus requiring an offset in price. The PPA provision ensures that the resource can be delivered regardless of the outcome of the CUP, and that the size of the resource is maximized in either scenario.

As a means to reduce the impact of potential non-delivery and to protect customers in the event of a development failure, the terms of the PPA require the developer to securitize the project through the posting of a development security prior to COD at escalating levels tied to key project milestones. Specifically, the developer is required to post $7.5 million in development security upon execution of the PPA, which increases to $21.25 million upon receipt of PUCN approval. This development security structure is designed to strongly incentivize the developer to mitigate development risks and successfully deliver the project, while providing meaningful financial protection to customers in the event of contract non-performance or termination.

Key Project Characteristics:

The proposed Lux Solar Center project is a utility-scale solar photovoltaic and BESS facility located in Lyon County, Nevada, approximately one hour southeast of Reno. The project is being developed by Lux Solar Center, LLC, an affiliate of Ørsted Americas. At present, Ørsted Americas owns and operates over 5.6 GW of renewable energy projects across North America. Orsted

Americas has delivered or is developing over 8 GW of utility-scale renewable energy projects since 2010.

The solar facility will utilize commercially proven thin-film bifacial PV modules mounted on single-axis tracking systems. Energy produced by the solar PV facility will be delivered to the Companies' system or stored in the co-located BESS for later dispatch. The BESS component will utilize lithium-ion technology in an AC-coupled configuration and will be capable of providing dispatchable capacity, energy, and ancillary services.

Project facilities will be located on approximately 1,100 acres of privately owned land under executed long-term lease agreements. Environmental studies, including a Phase I Environmental Site Assessment, cultural desktop review, critical issues analysis, and biological screening, have been completed. No material environmental constraints have been identified that would preclude construction or operation of the facility. Additional environmental studies will be completed in support of the Utilities Environmental Protection Act application prior to construction.

The Lux Solar Center project has executed an LGIA with the Companies. The project will interconnect to the Companies' transmission system at the Walker River Substation (formerly Fort Churchill Substation) at 120 kV.

Under the agreement, energy from the solar facility will be purchased for a 25-year term at a fixed rate of $55.95 per MWh, and BESS capacity will be purchased for a 20-year term at a fixed rate of $18,090 per MW-month. The Companies calculated the hybrid LCOE as $135.70 per MWh. As discussed above, if the CUP is not received, then the project size is reduced and the price of the solar energy will be $57.97 per MWh, and the calculated hybrid LCOE in that scenario is $143.92 per MWh. Based on the deliverability assurance attributes described in this project's introductory paragraphs above, the project's pricing assumes that it will qualify for tax credits, and, therefore, is best compared to pricing of other paired solar and BESS projects bid in the 2024 RFP that, based on their risk to reaching COD before the end of 2030, are assumed to not qualify for solar tax credits. For perspective, the Companies calculated the average LCOE of other solar and BESS project proposals from the 2024 RFP that were not selected using the submitted cap pricing of the solar energy and found that this project's LCOE for the 125 MW scenario is 13 percent lower in comparison, and 8 percent lower in the 121 MW scenario. A copy of the project LCOE comparison to average LCOE using solar cap pricing of non-selected solar and BESS project proposals is presented in Confidential Technical Appendix REN-24. All costs associated with the agreement are proposed to be recovered through Sierra's fuel and purchased power BTER mechanisms.

According to estimates provided by the developer, during construction, the project is expected to support approximately 250 direct jobs, of which an estimated 12 positions will be sourced locally from Nevada at an estimated average salary of $84,240 annually, equaling a total estimated payroll of $1 million over one construction year. Following commercial operation, the project is expected

to provide a permanent long-term increase in the workforce for the operation and maintenance of the facility with an estimated three positions at an estimated average salary of $90,002 annually and a total payroll in excess of $9.8 million over 35 years.

Figure REN-13 shows a map of the project site.

FIGURE REN-13
Lux Solar Center Project Site

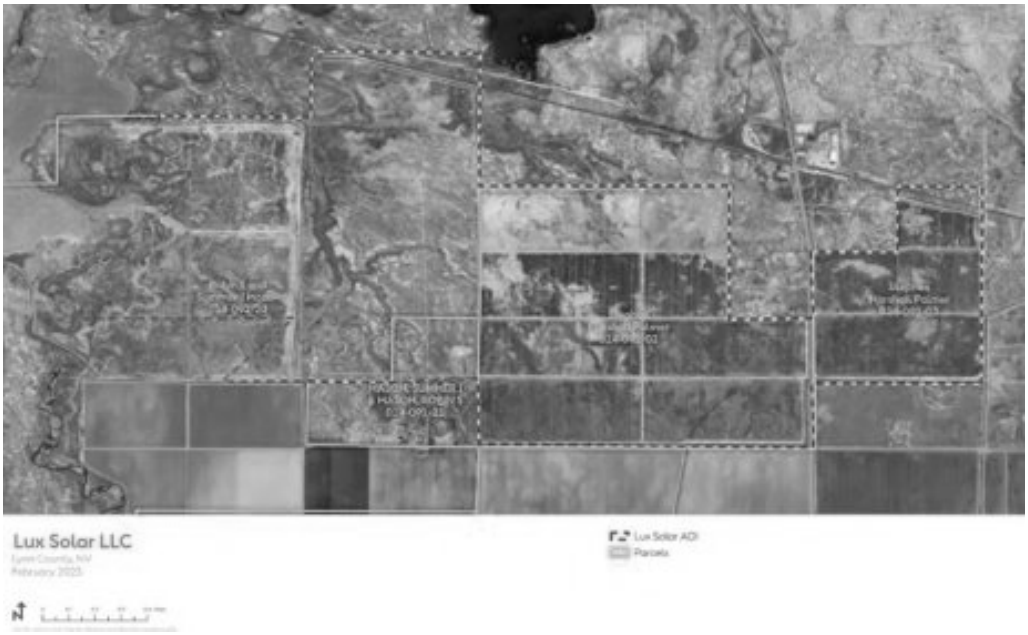

A copy of the PPA can be found in Technical Appendix REN-14-LSC(a). The Companies' due diligence summary for the Lux Solar Center project is included as Confidential Technical Appendix REN-14-LSC(b). Technical Appendix REN-14-LSC(c) contains detailed information about the Lux Solar Center project, including the information required by NAC § 704.8885, NAC § 704.8887 and § NRS 704.741. Key provisions of the Lux Solar Center PPA are summarized in Technical Appendix REN-14-LSC(d).

Nevada Geothermal Portfolio (OKGP)

The Companies present the Nevada Geothermal Portfolio (OKGP) PPA, a sleeved PPA associated with a customer agreement with Callisto Enterprises, LLC ("Callisto"). The portfolio will allow for a minimum of 50 MW and up to 150 MW of geothermal resources, with an expected COD of December 31, 2030. The project was not bid into the Companies' 2024 RFP but was rather brought forward by Callisto as a dedicated resource to serve their load. The PPA will provide for a 15-year term following completion of the project development period.

As a means to reduce the impact of potential non-delivery and to protect customers in the event of a development failure, the terms of the PPA require the developer to securitize the project through the posting of a development security prior to COD at escalating levels tied to key project milestones. Specifically, the developer is required to post $1.5 million in development security upon execution of the PPA, which increases to $4.25 million upon receipt of PUCN approval of the PPA. As this PPA is for a portfolio of projects, the development security reduces proportionally with the MW-capacity of projects that achieve COD, provided that it shall not be less than $0. This balanced approach to development security structure is designed to strongly incentivize the developer to mitigate development risks and successfully deliver the project, while providing meaningful financial protection to customers in the event of contract non-performance or termination. Furthermore, as this is a sleeved PPA associated with a customer agreement, the PPA also contains a provision that in the event of non-receipt of PUCN approval of the customer agreement, then the PPA may be terminated with no liability to either party.

Key Project Characteristics:

The proposed Nevada Geothermal Portfolio (OKGP) project is a portfolio-based renewable energy resource consisting of multiple utility-scale geothermal facilities located within the State of Nevada. The portfolio is being developed by OKGP, LLC, an affiliate of Ormat Technologies, and will deliver energy to Sierra's system.

The Nevada Geothermal Portfolio (OKGP) includes up to six geothermal generation facilities, as follows: Baltazor, Whirlwind, Dixie Valley West, McGee, Excelsior, and Mason. Each facility is designed to deliver approximately 7 MW of net geothermal generating capacity[53], resulting in a combined portfolio capacity of approximately 42 MW net of station usage. The facilities will utilize commercially proven binary geothermal technology employing OEC units, providing firm, dispatchable, baseload renewable energy. All geothermal fluids will be fully reinjected, resulting in minimal environmental impact and high operational reliability.

Project facilities are located on land for which Ormat has secured geothermal leases and associated site control. Environmental analysis, permitting, and interconnection activities are underway or planned in accordance with applicable federal, state, and local requirements. Approximately half of the portfolio projects have executed LGIAs with the Companies, and interconnection applications have been submitted or are expected to be executed for the remaining projects in advance of their respective CODs. The portfolio approach allows individual facilities to achieve commercial operation independently while contributing to a single aggregated resource.

No material environmental constraints have been identified that would preclude development of the facilities, and permitting activities are expected to proceed in parallel with project

[53] Net geothermal generating capacity is the total capacity of the facility net of all energy consumed by the facility for station usage.

development. Environmental reviews will be conducted in accordance with NEPA, the Utilities Environmental Protection Act ("UEPA"), and other applicable requirements.

Under the sleeved PPA and associated customer agreement, energy from each geothermal facility will be purchased at a fixed price of $107.00 per MWh. The Companies calculated the LCOE as $107.00 per MWh excluding any network upgrade costs of the facilities, as those costs are not currently known. All costs associated with the customer agreement are proposed to be recovered through the sleeved PPA associated with the customer agreement.[54]

According to estimates provided by the developer during construction, each facility is expected to support significant local employment and economic benefits, including construction jobs and long-term skilled operations positions, including a temporary increase in workforce of an estimated 20 positions, of which an estimated 15 positions will be sourced locally from Nevada at an estimated average salary of $87,942 annually, equaling a total estimated payroll of $1,758,848 million over one construction year per facility. Following commercial operation, the project is expected to provide a permanent long-term increase in the workforce for the operation and maintenance of each facility of an estimated 13 positions at an estimated average salary of $72,252 annually and a total payroll of $19,825,728 over 20 years per facility.

Figure REN-14 through REN-19 show maps of the project sites.

[54] *Id*.

FIGURE REN-14
Baltazor Project Site

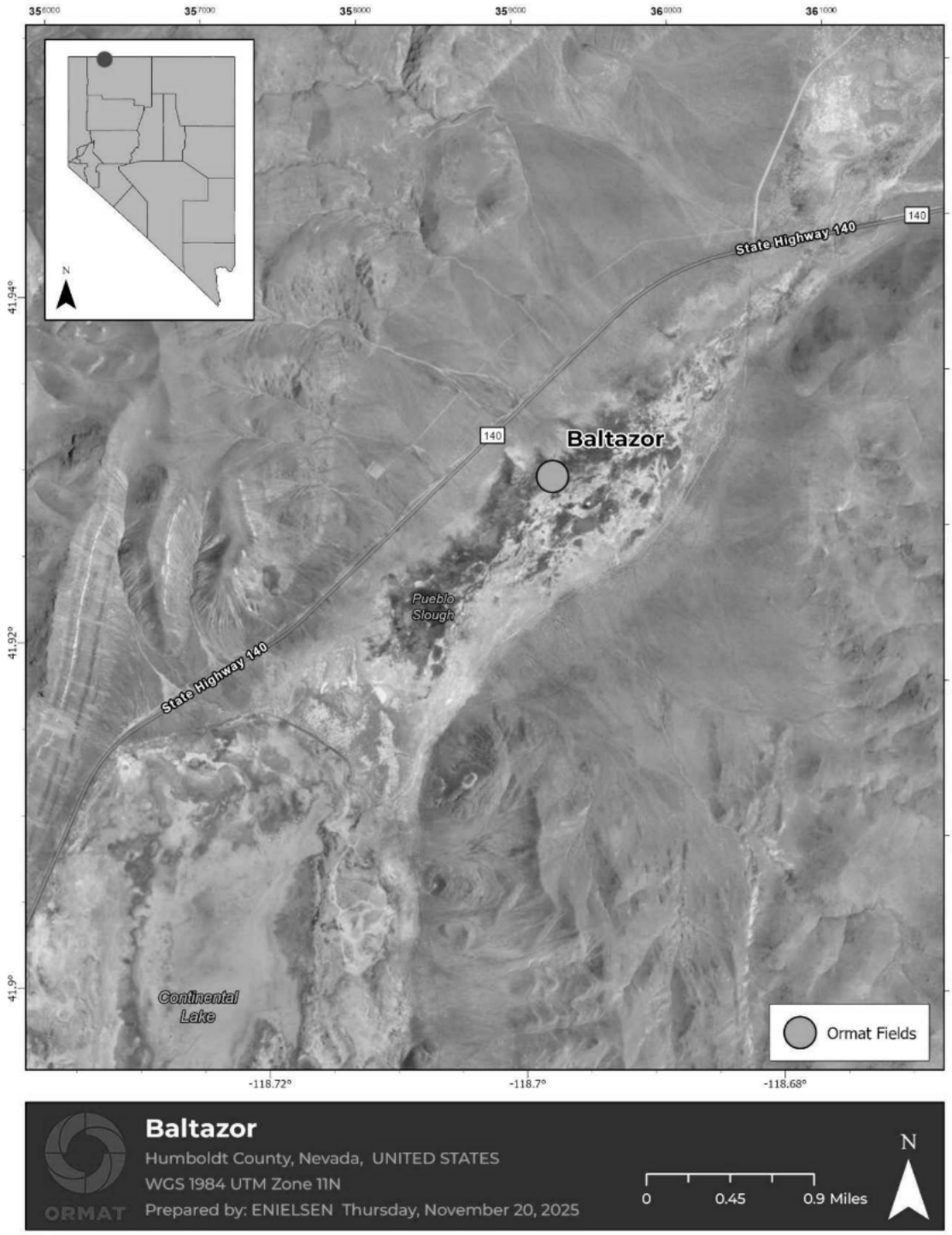

FIGURE REN-15
Whirlwind Project Site

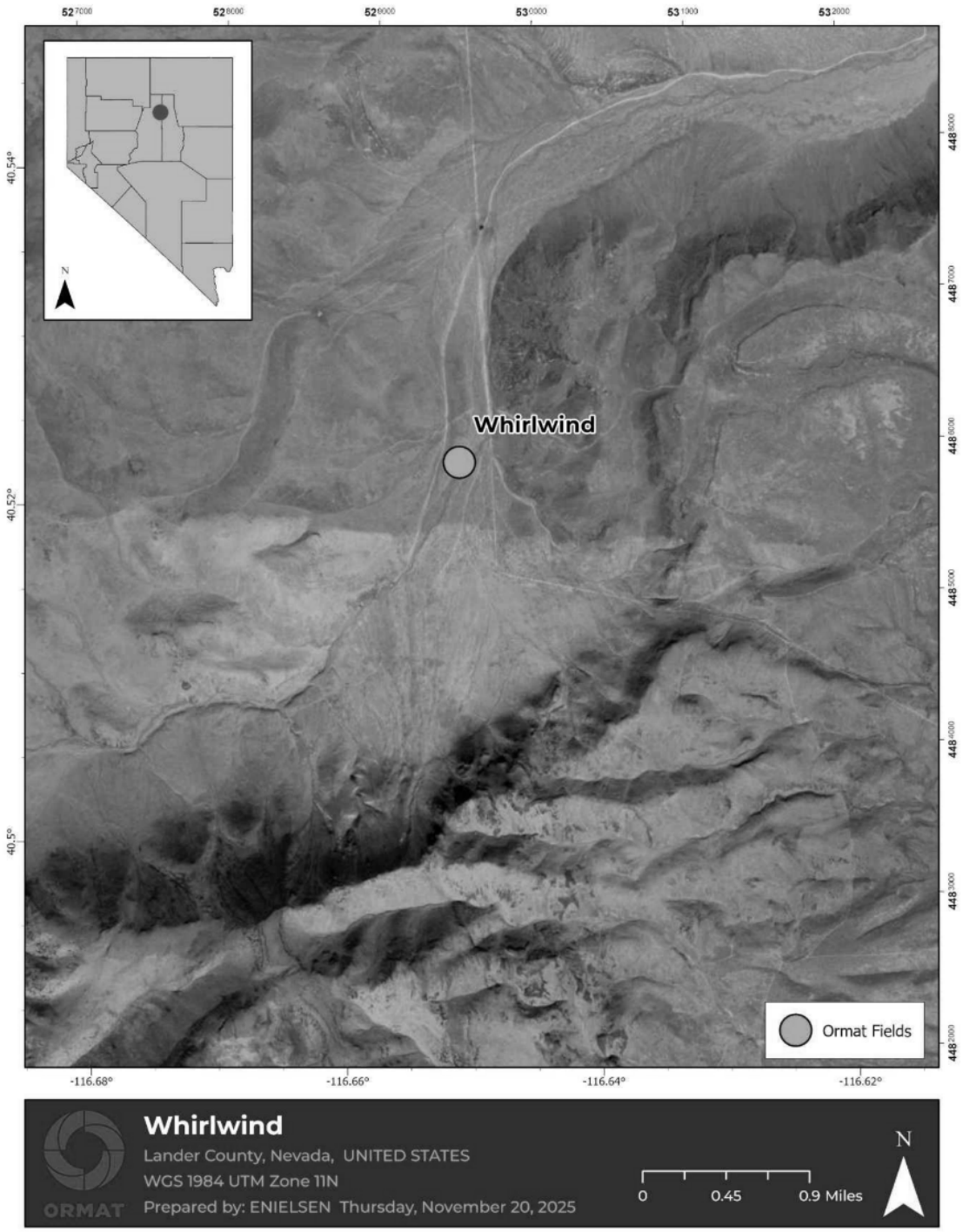

FIGURE REN-16
Dixie Valley West Project Site

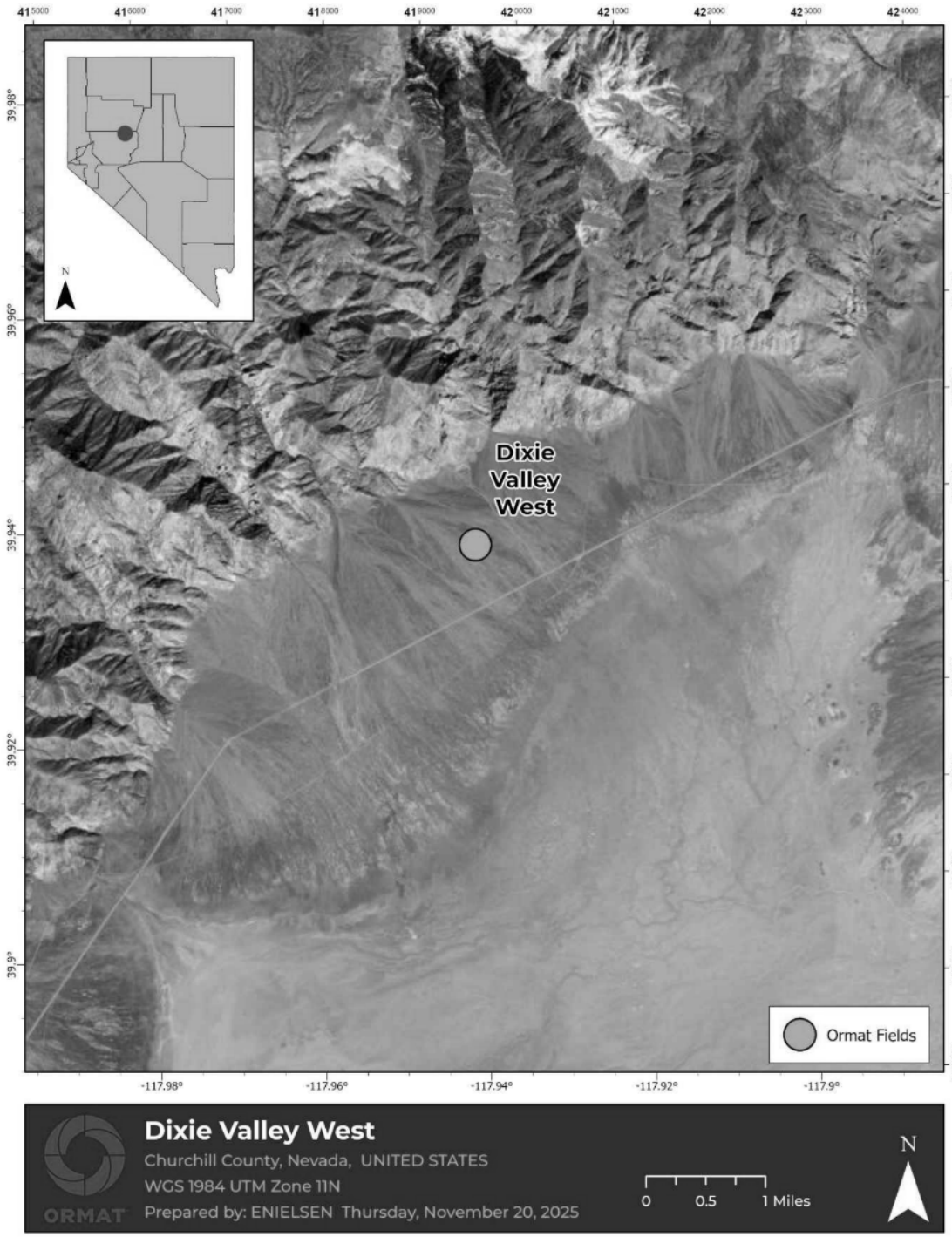

FIGURE REN-17
McGee Project Site

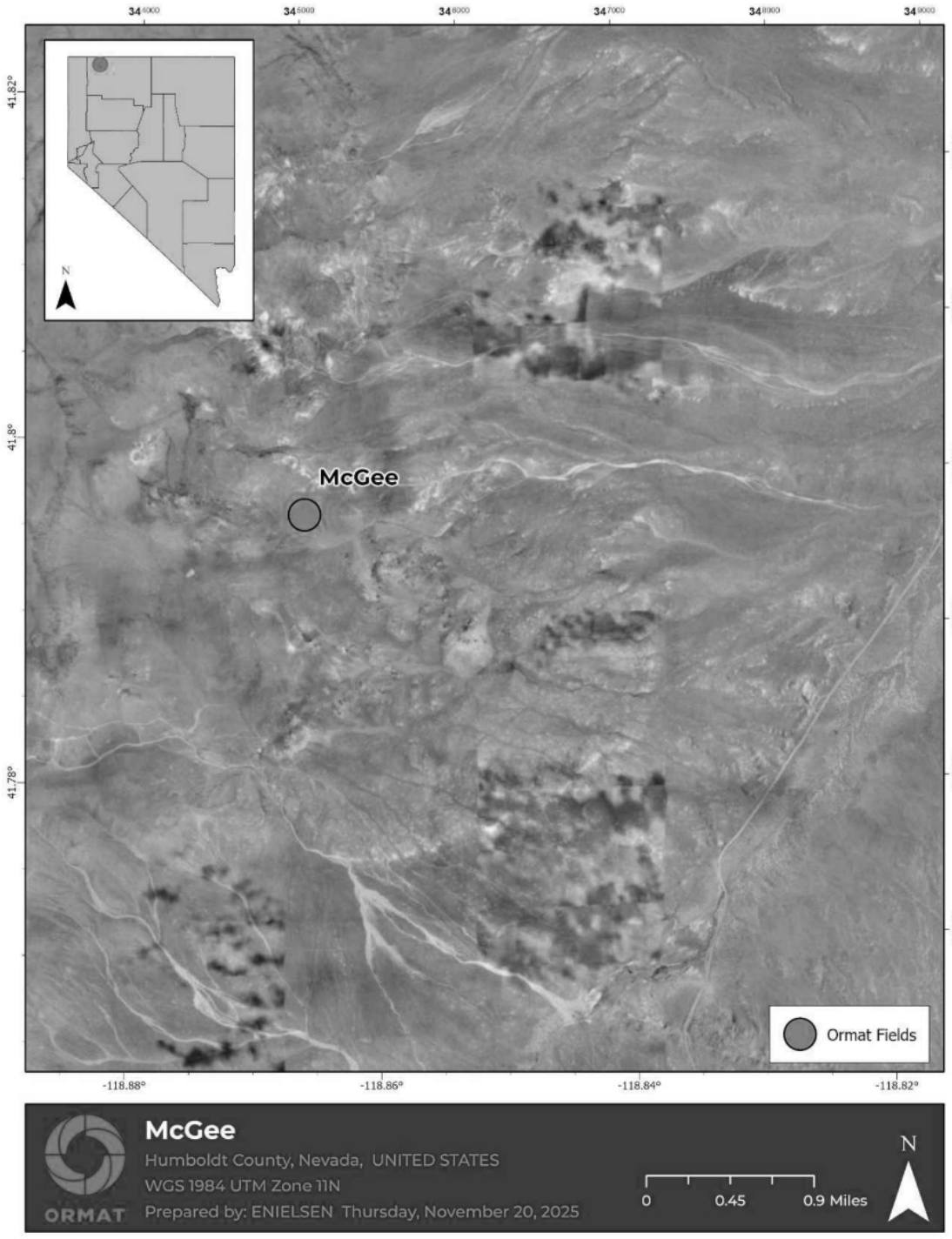

FIGURE REN-18
Excelsior Project Site

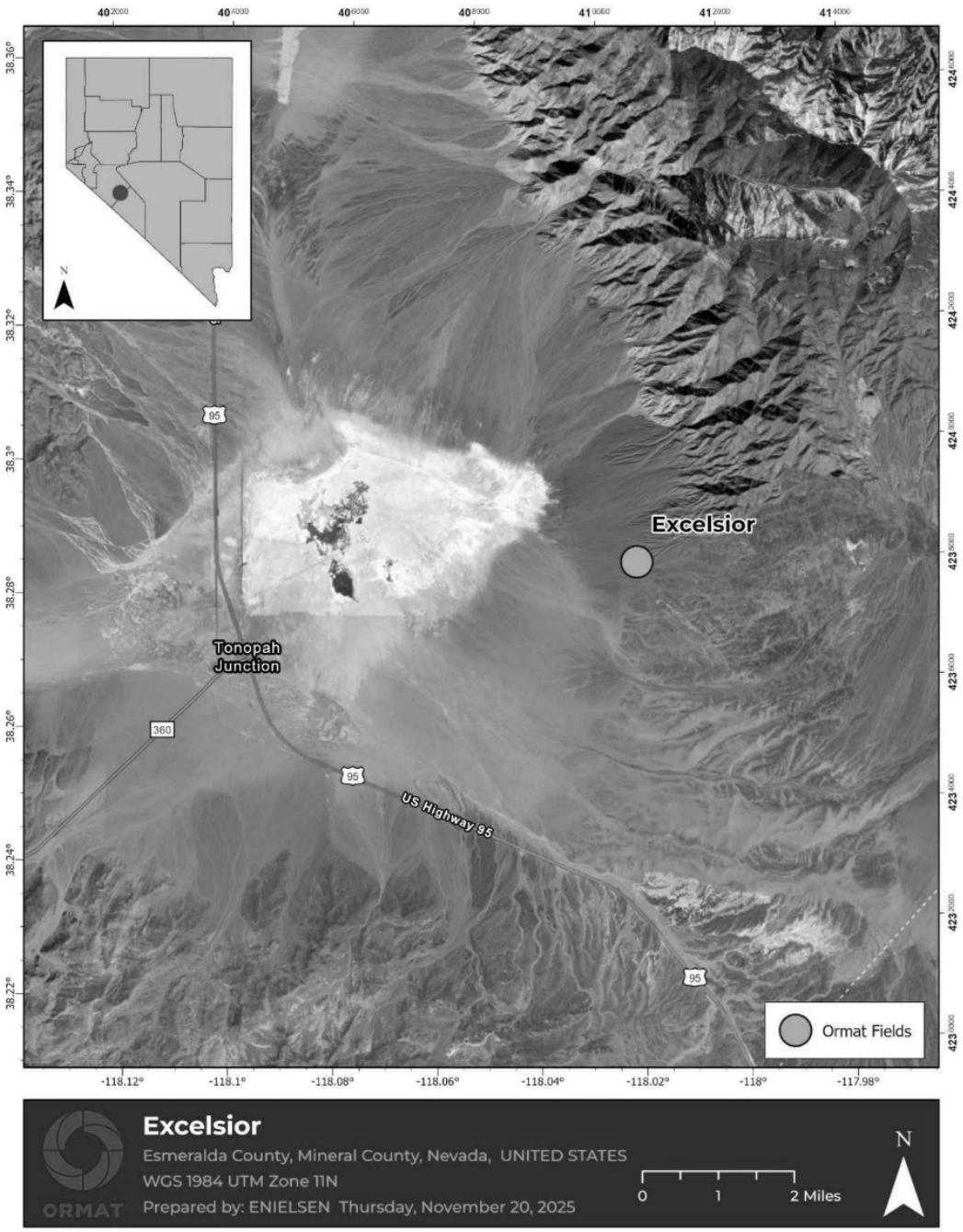

FIGURE REN-19
Mason Project Site

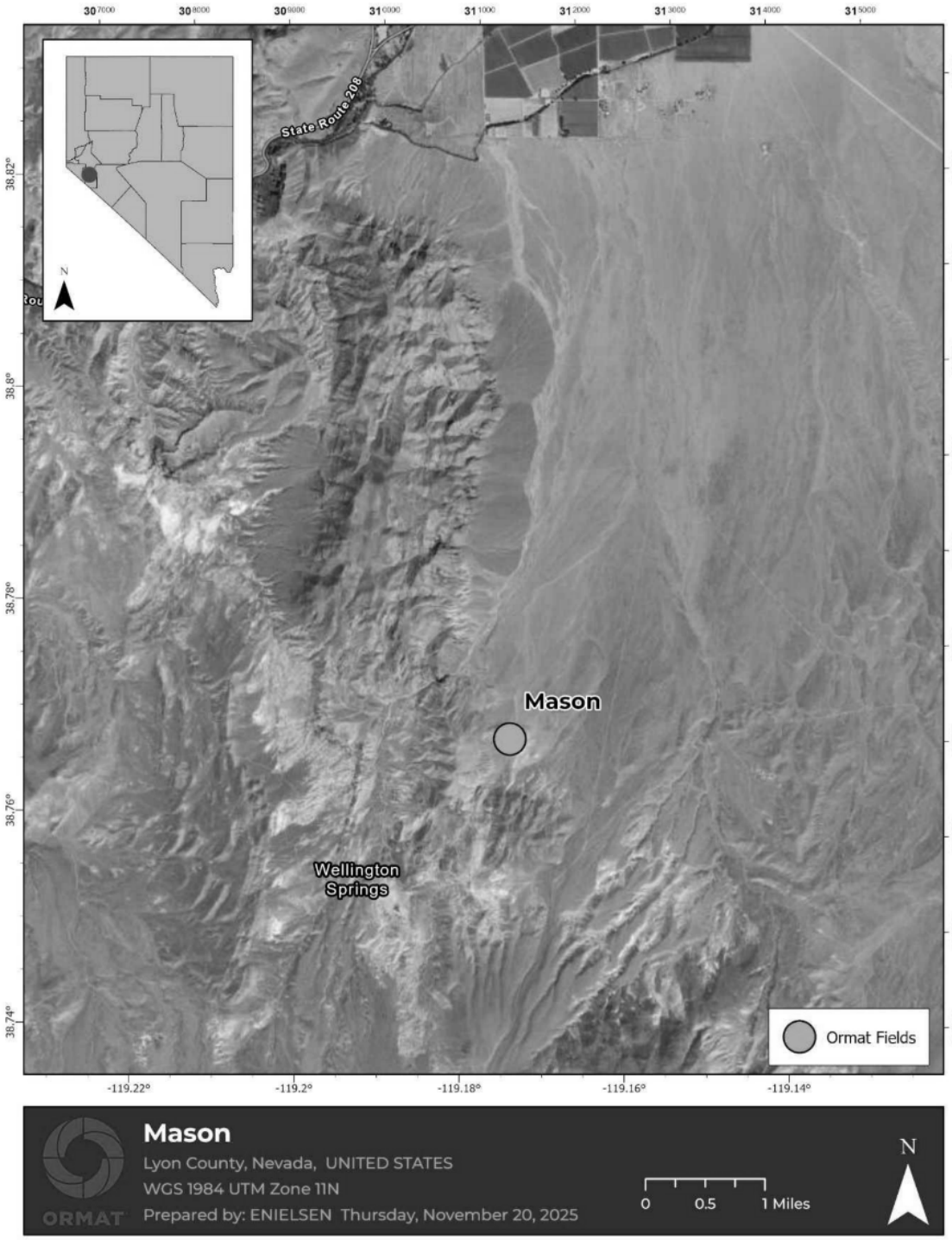

A copy of the PPA can be found in Technical Appendix REN-15-NGP(a). The Companies' due diligence summary for the Nevada Geothermal Portfolio (OKGP) project is included as Confidential Technical Appendix REN-15-NGP(b). Technical Appendix REN-15-NGP(c) contains detailed information about the Nevada Geothermal Portfolio (OKGP) project, including the information required by NAC § 704.8885, NAC § 704.8887 and § NRS 704.741. Key provisions of the Nevada Geothermal Portfolio (OKGP) PPA are summarized in Technical Appendix REN-15-NGP(d).

NGP Blue Mountain Third Amendment

The Companies present the NGP Blue Mountain PPA Third Amendment project ("NGP Third Amendment") that will provide for additional generation output of the facility, beginning on March 31, 2027, and an extension of the term through 2046.[55] The NGP Third Amendment project was bid into the Companies' 2024 RFP and was selected based on several factors including the Companies' due diligence assessment, system needs, and customer value. The NGP Third Amendment project would enable the existing NGP Blue Mountain facility to undergo capital improvements, including improvements to the geothermal wells, to allow increased net generation to be delivered to the Companies' system. Once completed, the improvement project would increase the expected output of the facility, reaching up to 30 MW and degrading annually for the remainder of the term. As the resource is located in Sierra's territory and can achieve additional increased generating capacity in the near term, it will support helping address systemwide open capacity needs.

The NGP Third Amendment project also assigns the PPA from Nevada Power to Sierra to align the resource with the load base it will serve, as well as allocating the portfolio credits generated from the facility to Sierra. The assignment would become effective upon the date of the Commission's Order approving request of the NGP Third Amendment.

As the NGP Blue Mountain is an existing facility, development security is not applicable, and the NGP Blue Mountain Third Amendment does not propose any changes to the operating security requirements of the current NGP Blue Mountain PPA approved in Docket No. 06-10021.[56]

Key Project Characteristics:

The NGP Blue Mountain ("NGP Blue Mountain") facility is an existing geothermal electric generating facility located near Winnemucca in Humboldt County, Nevada. The facility is owned and operated by NGP Blue Mountain I, LLC, which is affiliated with Ormat Technologies. The

[55] NGP Blue Mountain PPA was approved in Docket No. 06-10021.
[56] The Companies currently hold a Letter of Credit in the amount of $3.8 million as operating security for the NGP Blue Mountain PPA.

facility has been in continuous operation for more than a decade and currently delivers geothermal energy to the Companies pursuant to an existing PPA.[57]

NGP Blue Mountain has a nameplate capacity of approximately 49.5 MW and a net contract capacity of approximately 40.1 MW, neither of which will be affected by the NGP Third Amendment project. The NGP Blue Mountain facility consists of three binary geothermal units utilizing the Ormat Energy Converter ("OEC") technology[58], supported by an established geothermal wellfield. Power is delivered as a baseload, around-the-clock renewable resource and provides firm, dispatchable energy to the Companies' system.

The NGP Blue Mountain geothermal resource has experienced natural thermal decline associated with the original wellfield configuration. To address this decline and support long-term operational stability, the NGP Blue Mountain facility owner proposes, through the NGP Third Amendment project, a redevelopment of the geothermal wellfield and targeted retrofits to existing generation equipment. The redevelopment includes well workovers, injection optimization, and plant efficiency upgrades designed to stabilize resource temperatures and sustain reliable generation over the extended contract term. No new generating units are proposed, and all work will occur on existing well pads and within the established NGP Blue Mountain facility footprint.

The NGP Blue Mountain facility operates under all required federal, state, and local permits, including geothermal well permits, air quality permits, underground injection control approvals, water rights, and a conditional use permit. Existing interconnection facilities are in service, and the facility maintains an active LGIA with Sierra. The NGP Third Amendment project will require no new transmission facilities.

The proposed amended PPA would extend the contract term through December 31, 2046, and include renewed annual generation supply tables. Beginning on the amended PPA's effective date, all geothermal energy from the facility would be purchased at a rate of $105.00 per MWh. As the NGP Third Amendment project is an improvement of the existing NGP Blue Mountain facility and requires no network upgrades or other costs, the Companies calculated the LCOE of this improved resource as $105.00 per MWh. This is nearly 2.5 percent less than the geothermal energy resource most recently presented for the Commission's review, the Corsac Generating Station 2 PPA approved in Docket No. 24-05041. All costs under the amended agreement would continue to be recovered through Sierra's fuel and purchased power BTER mechanisms.

According to estimates provided by the developer, the project is expected to continue supporting approximately ten full-time onsite jobs, along with additional technical and engineering support roles based in Nevada. Capital investment associated with the wellfield redevelopment and plant

[57] Approved in Docket No. 06-10021.
[58] Ormat Technologies Inc., *Recovered Energy Generation,* April 17, 2026, available at https://www.ormat.com/en/renewables/reg/view/?ContentID=231.

retrofits is expected to exceed $20 million, with a significant portion spent in Nevada on labor, construction services, and equipment.

Figure REN-20 shows a map of the NGP Third Amendment project site.

FIGURE REN-20
NGP Blue Mountain Third Amendment Project Site

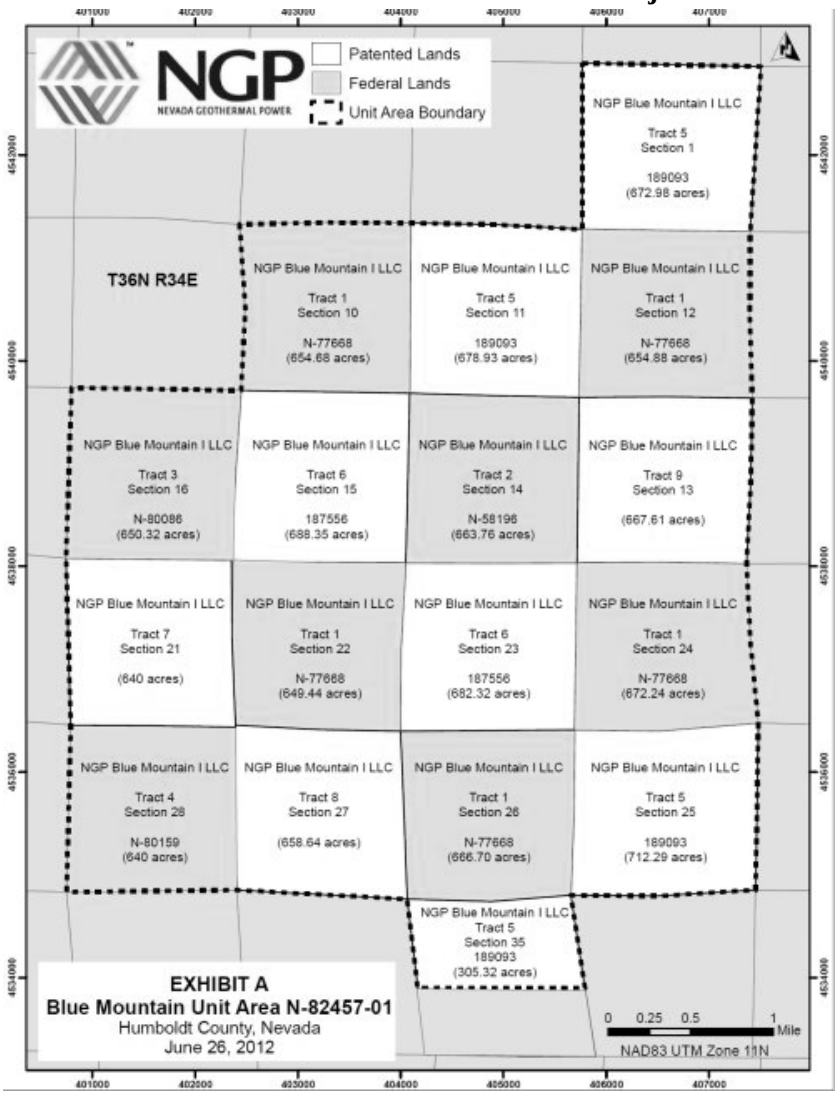

A copy of the PPA Amendment can be found in Technical Appendix REN-16-NBM(a). The Companies' due diligence summary for the NGP Blue Mountain Third Amendment project is included as Confidential Technical Appendix REN-16-NBM(b). Technical Appendix REN-16-NBM(c) contains detailed information about the NGP Blue Mountain Third Amendment project, including the information required by NAC § 704.8885, NAC § 704.8887 and § NRS 704.741.

Key provisions of the NGP Blue Mountain Third Amendment PPA are summarized in Technical Appendix REN-16-NBM(d).

North Nevada Geothermal Portfolio

The Companies present the North Nevada Geothermal Portfolio PPA as part of a sleeved PPA associated with a customer energy agreement. The portfolio will allow for an expected 100 MW of geothermal resources, with an expected COD of December 31, 2030, with limited relief to reach the entire 100 MW up until December 31, 2033. The project was not bid into the Companies' 2024 RFP but was rather brought forward by the sleeved PPA counterparty, Amazon , as a dedicated resource to serve their load. The PPA will provide for a term extending through December 31, 2050, approximately 20 years.

As a means to reduce the impact of potential non-delivery and to protect customers in the event of a development failure, the terms of the PPA require the developer to securitize the project through the posting of a development security prior to COD at escalating levels tied to key project milestones. Specifically, the developer is required to post $1.5 million in development security upon execution of the PPA, which increases to $3 million upon the Companies' submittal of the PPA to the PUCN for approval, which further increases to $5.4 million upon receipt of PUCN approval of the PPA, and which further increases to $8.5 million 120 days after receipt of PUCN approval of the PPA. As this PPA is for a portfolio of projects, the development security reduces proportionally with the MW-capacity of projects that achieve COD, provided that it shall not be less than $0. This balanced approach to development security structure is designed to strongly incentivize the developer to mitigate development risks and successfully deliver the project, while providing meaningful financial protection to customers in the event of contract non-performance or termination. Furthermore, as this is a sleeved PPA associated with a customer agreement, the PPA also contains a provision that in the event of non-receipt of PUCN approval of the customer agreement, then the PPA may be terminated with no liability to either party.

Key Project Characteristics:

The proposed North Nevada Geothermal Portfolio PPA is associated with a portfolio consisting of five utility-scale geothermal generating facilities located in northern Nevada (the "Zanskar Portfolio"), as follows: Pumpernickel, Rose of Snowville, Stony Point, Trexler, and Big Blind. The facilities are being developed by Overcall Energy LLC, a wholly owned affiliate of Zanskar Geothermal & Minerals, Inc ("Zanskar"), and will deliver energy to Sierra's system. Zanskar is a U.S.-based company, headquartered in Salt Lake City, UT. Zanskar owns and operates the 15 MW Lightning Dock Geothermal facility in New Mexico, which it acquired in 2024 and subsequently repowered to improve operations. Zanskar's team has been involved with the wellfield drilling and development of 700 MW of geothermal capacity across five countries, covering the full spectrum from early discovery holes to full production wells. .

Each facility will utilize commercially proven binary Organic Rankine Cycle ("ORC") geothermal technology and will be designed with a net contract capacity of approximately 20 MW, resulting in an aggregate portfolio capacity of approximately 100 MW. The facilities will be air-cooled, utilize closed-loop geothermal fluid systems with full reinjection, and are expected to operate as firm, dispatchable, baseload renewable resources.

Project sites are located on a combination of private and federal land for which Zanskar has secured all geothermal rights. Environmental and land use permitting activities are underway, including early coordination with the BLM, Nevada Department of Wildlife, and county jurisdictions. Environmental review will be conducted in accordance with NEPA, UEPA, and other applicable requirements. No material environmental constraints have been identified that would preclude development of the facilities. The portfolio approach allows individual facilities to achieve commercial operation independently while contributing to a single aggregated resource.

Each facility will interconnect to Sierra's transmission system pursuant to individual interconnection agreements. Interconnection requests have been submitted for all but one project within the North Nevada Geothermal Portfolio ,[59] and the developer plans to submit the remaining interconnection request during the next Large Generator Interconnection Cluster window that opens beginning June 15, 2026, with points of interconnection located at existing 120-kV substations or transmission lines. Transmission facilities required for the projects are anticipated to be consistent with standard geothermal interconnection configurations, including generation step-up transformers, gen-tie lines, and related substation equipment.

Under the customer agreement, energy from each facility will be purchased at a fixed price of $105.00 per MWh. The Companies calculated the LCOE as $105.00 per MWh excluding any network upgrade costs of the facilities, as those costs are not currently known. All costs associated with the customer agreement are proposed to be recovered through the sleeved PPA.[60]

According to estimates provided by the developer construction of the facilities is expected to support over 700 jobs across drilling, civil construction, electrical work, and plant installation, of which an estimated 550 positions will be sourced locally from Nevada at an estimated average salary of $150,000 annually, equaling a total estimated payroll of $115 million over one construction year. Following commercial operation, the project is expected to provide a permanent long-term increase in the workforce for the operation and maintenance of the facility with an estimated 34 positions at an estimated average salary of $83,000 annually and a total annual payroll of $2.8 million over 20 years.

[59] The North Nevada Geothermal Portfolio PPA is securitized by a letter of credit as discussed in the project's introductory paragraphs above, in part as a means to mitigate development risk, including risk associated with the early stage development project sites that have pending interconnection agreements.
[60] *Id.*

Figures REN-21 through REN-25 show maps of the project sites.

FIGURE REN-21

Pumpernickel Project Site

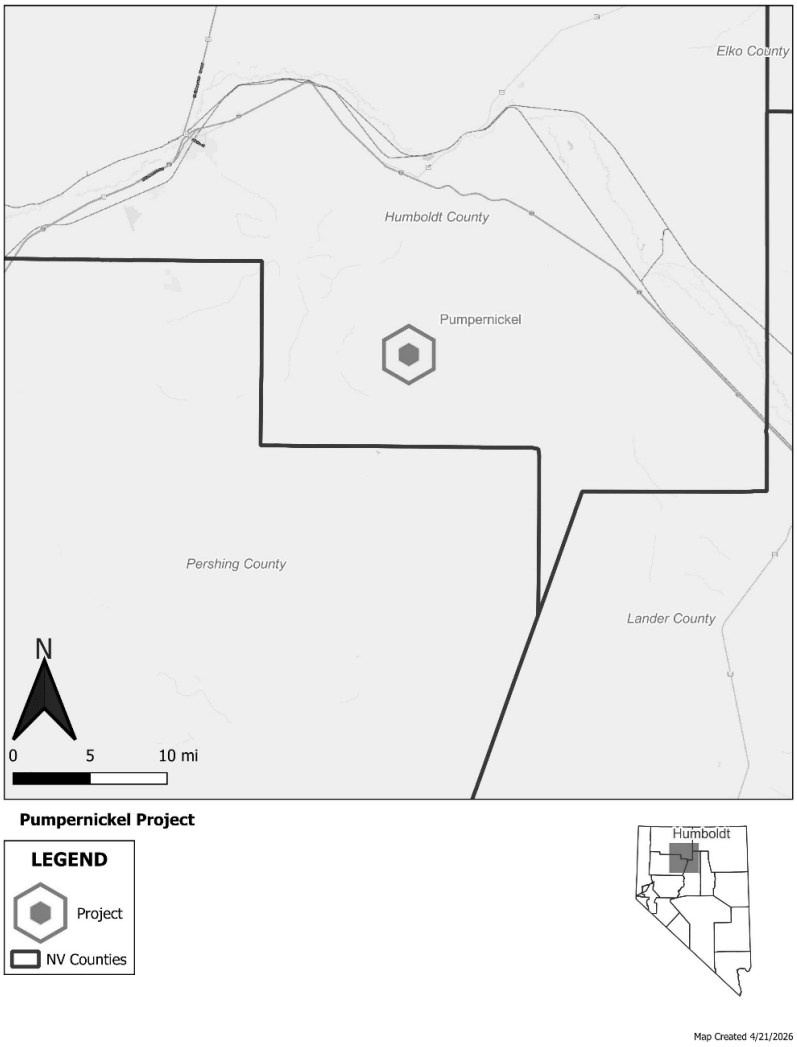

FIGURE REN-22
Rose of Snowville Project Site

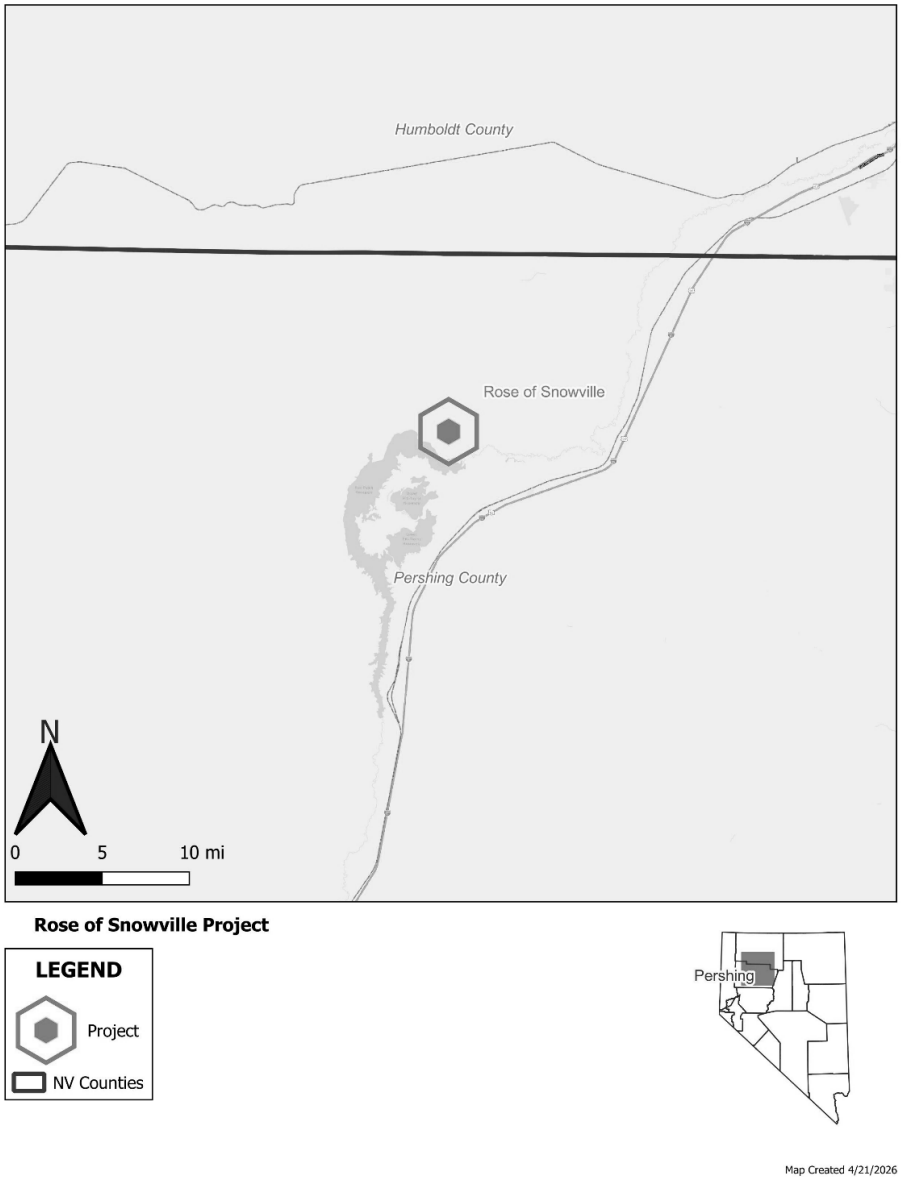

FIGURE REN-23
Stony Point Project Site

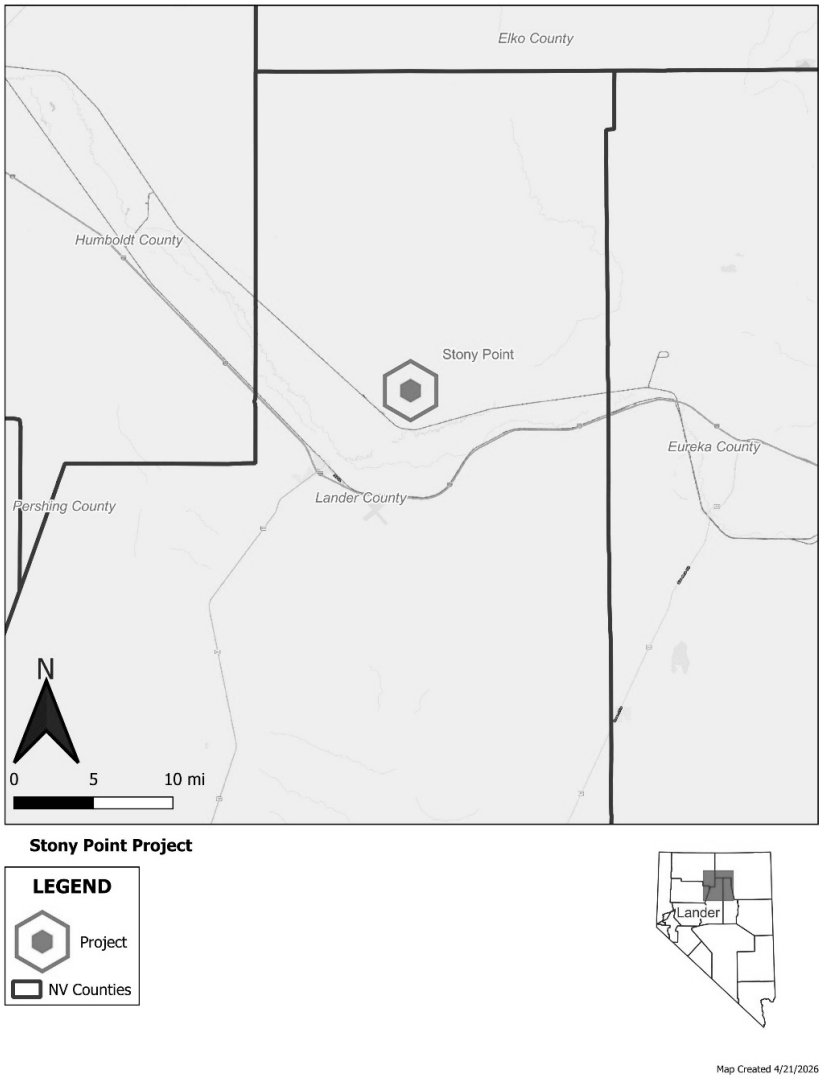

FIGURE REN-24
Trexler Project Site

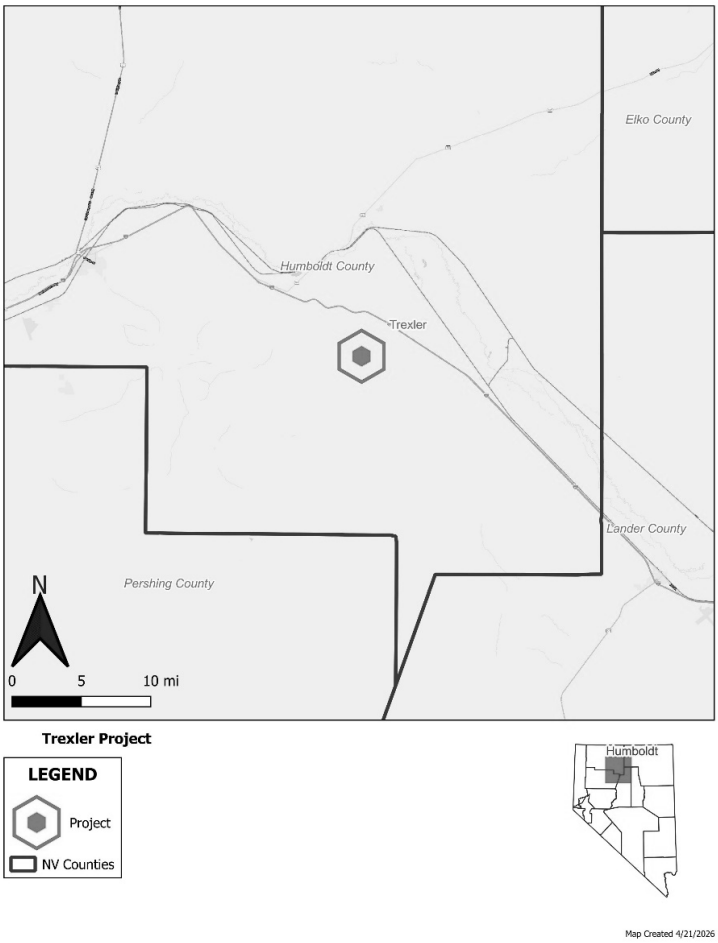

FIGURE REN-25
Big Blind Project Site

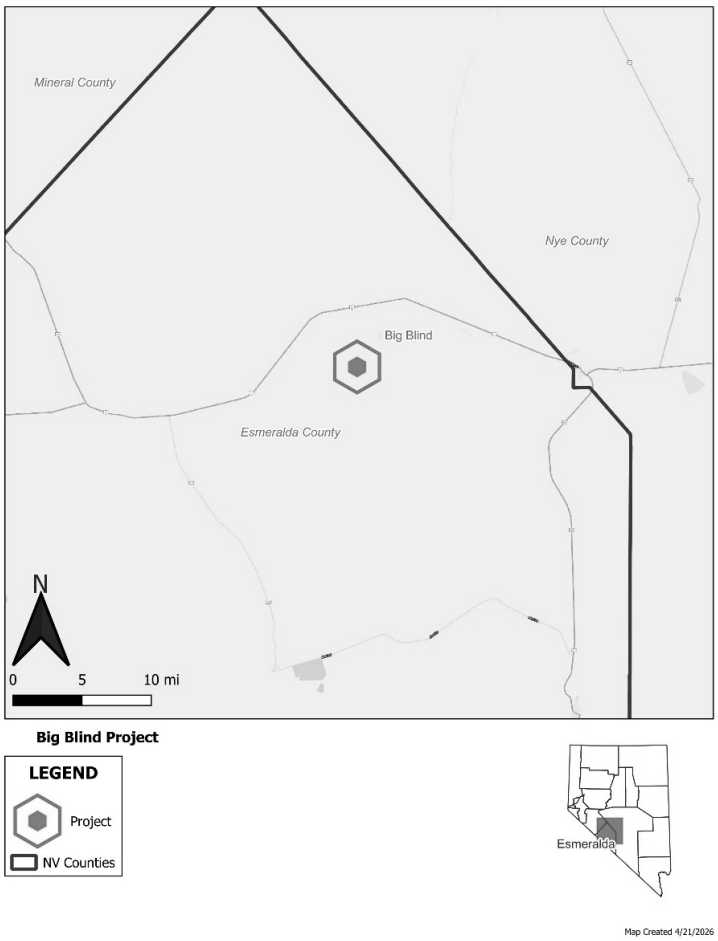

A copy of the PPA can be found in Technical Appendix REN-17-NNGP(a). The Companies' due diligence summary for the North Nevada Geothermal Portfolio project is included as Confidential Technical Appendix REN-17-NNGP(b). Technical Appendix REN-17-NNGP(c) contains detailed information about the North Nevada Geothermal Portfolio project, including the information required by NAC § 704.8885, NAC § 704.8887 and § NRS 704.741. Key provisions of the North Nevada Geothermal Portfolio PPA are summarized in Technical Appendix REN-17-NNGP(d).

Sleepy Orange

The Companies present the Sleepy Orange PPA ("Sleepy Orange") that will provide a 500-MW solar PV generation facility paired with a 500-MW, four-hour battery resource in Sierra's system with a COD of May 31, 2030. The project was bid into the Companies' 2024 RFP and selected based on several factors including the Companies' due diligence assessment, system needs, and customer value. The project is located entirely on BLM land and is thus subject to the DOI Review Policy Memorandum process. However, as described above, the Companies received responses from RFP bidders regarding their project-specific safe harbor strategies, and Primergy, the parent company to the Sleepy Orange project, conveyed a unique situation applicable to the project. Because Sleepy Orange established "beginning of construction" requirements prior to the passage of the OBBBA, and is located on public lands, it qualifies for safe harbor status under the previous tax rules, and therefore is allowed up to a 10-year window from beginning of construction to reach its COD and maintain eligibility to claim the tax credits. Thus, potential development or permitting delays do not present the same risk of a tax credit cliff in 2030 faced by most other projects. The project is being offered at a fixed price, and with a runway up to the year 2034 to place the project in service and still be eligible to claim the tax credits. Hence, Sleepy Orange is well-positioned to navigate permitting and project schedule challenges and ultimately deliver competitively priced energy for Sierra's customers.

As a means to reduce the impact of potential non-delivery and to protect customers in the event of a development failure, the terms of the PPA require the developer to securitize the project through the posting of a development security prior to COD at escalating levels tied to key project milestones. Specifically, the developer is required to post $30 million in development security upon execution of the PPA, which increases to $85 million upon receipt of PUCN approval of the PPA.

As discussed in this section's Part B above, given the uncertainty to project development and timeline posed by the DOI Review Policy Memorandum, the Companies' were challenged to contract with counterparties willing to bear the risk of losing the development security due to such unprecedented external factors preventing their projects from reaching the intended COD. To facilitate a viable transaction, the Companies negotiated terms of the PPA that allow for the Companies to retain a portion of the development security if the PPA terminates due to the project's failure to obtain Full Notice to Proceed ("FNTP") authorization from the BLM prior to December 31, 2032. The retained security amount was tailored specific to this PPA and set equal to $30 million. This balanced approach to development security structure is designed to strongly incentivize the developer to mitigate development risks and successfully deliver the project, while providing meaningful financial protection to customers in the event of contract non-performance or termination.

Key Project Characteristics:

The Sleepy Orange project is a proposed utility-scale solar PV and BESS facility to be located in Lyon County, Nevada, within Sierra's service territory. The project is being developed by Sleepy Orange Solar, LLC, an affiliate of Primergy Solar. Primergy is a U.S.-based company with approximately 1,584 MW of operating generation capacity across four states, including more than 1,200 MW of solar PV capacity and 1,520 MWh of BESS usable storage capacity. Primergy has developed, constructed, and currently operates 49 solar facilities and one battery energy storage facility. Primergy's notable project in Nevada includes the Gemini Solar project, consisting of 690 MW of operational solar PV capacity and 1,520 MWh of operational battery energy storage, that is currently under contract with Nevada Power and providing energy and associated benefits to Sierra's customers.

The solar facility will utilize commercially proven bifacial photovoltaic modules mounted on single-axis tracking systems. Energy produced by the solar facility will be delivered to Sierra's system or stored in the co-located battery energy storage system for later dispatch. The battery storage system will use lithium-ion technology in an AC-coupled configuration and will be capable of providing energy, capacity, and ancillary services.

The Sleepy Orange project will be constructed on approximately 3,000 acres of BLM land. The developer has established site control sufficient to support continued permitting and development activities, and federal land use authorization is being advanced through the applicable BLM processes. Environmental baseline studies are underway, including biological, cultural, and other surveys required to support National Environmental Policy Act review. No material environmental constraints have been identified at this stage that would preclude development of the project.

The project has an executed LGIA with Sierra, and will interconnect to Sierra's transmission system at a collector substation near the Walker River Substation (formerly Fort Churchill Substation) at 345 kV. Until the collector substation is built, it will be interconnecting at the Walker River Substation 345 kV bus. The interconnection facilities include a new project substation and an approximately 11-mile generation tie-line.

Under the agreement, energy from the solar generating facility will be purchased for a 25-year term at a fixed rate of $30.90 per MWh, and capacity from the battery energy storage facility will be purchased for a 20-year term at a fixed rate of $12,750 per MW-month. The Companies calculated the hybrid LCOE as $89.80 per MWh. Based on the deliverability assurance attributes described in this project's introductory paragraphs above, the project's pricing assumes that it will qualify for tax credits, and, therefore, is best compared to pricing of other paired solar and BESS projects bid in the 2024 RFP that, based on their risk to reaching COD before the end of 2030, are assumed to not qualify for solar tax credits. For perspective, the Companies calculated the average LCOE of other solar and BESS project proposals from the 2024 RFP that were not selected using

the submitted cap pricing of the solar energy and found that this project's LCOE is 43 percent lower in comparison. A copy of the project LCOE comparison to average LCOE using solar cap pricing of non-selected solar and BESS project proposals is presented in Confidential Technical Appendix REN-24. All costs associated with the agreement are proposed to be recovered through Sierra's fuel and purchased power BTER mechanisms.

According to estimates provided by the developer, during construction, the project is expected to support an estimated 700 temporary construction jobs at peak, with 525 being sourced locally from Nevada, and with an average salary of $135,000 annually, equating to a total estimated payroll of $70.98 million over one construction year. A permanent long-term increase in workforce for the operations and maintenance of the facility is an estimated seven permanent positions at an estimated average salary of $114,400 annually and a total payroll of $20.02 million over 25 years.

Figure REN-26 shows a map of the project site.

FIGURE REN-26
Sleepy Orange Project Site

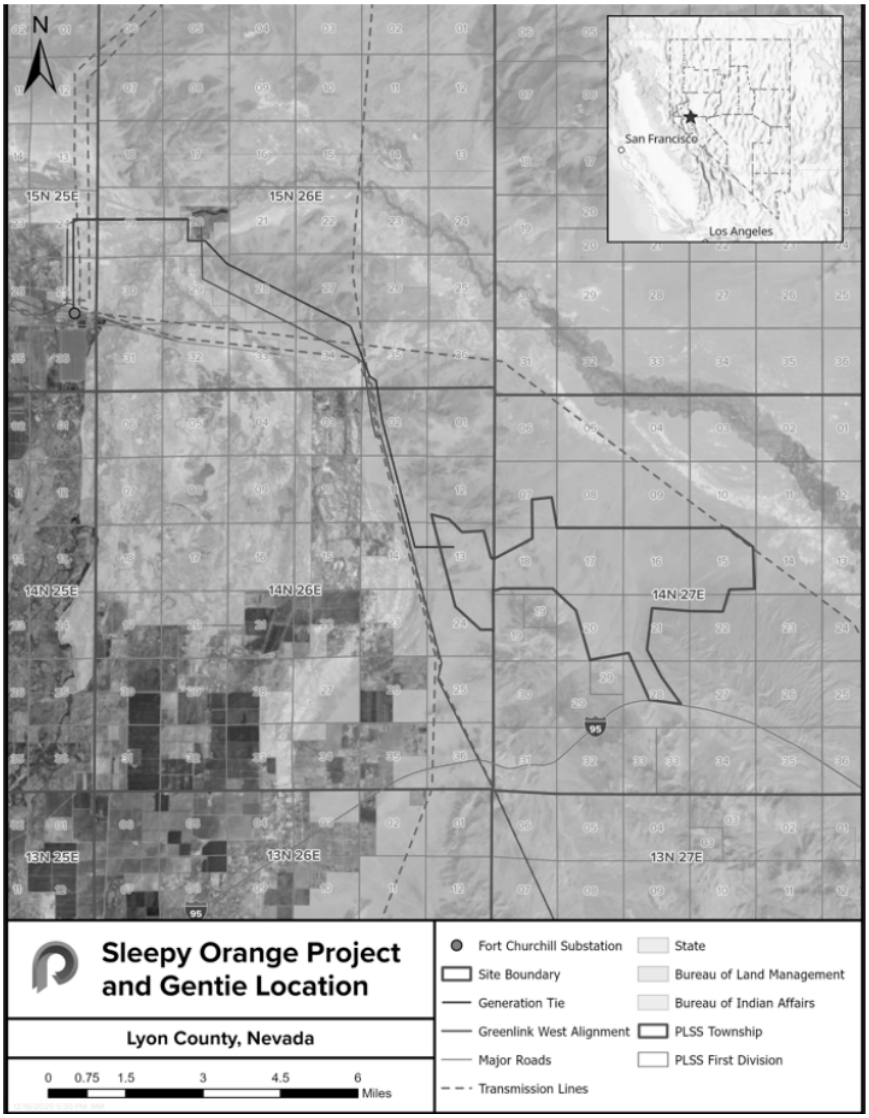

A copy of the PPA can be found in Technical Appendix REN-18-SOS(a). The Companies' due diligence summary for the Sleepy Orange Solar project is included as Confidential Technical Appendix REN-18-SOS(b). Technical Appendix REN-18-SOS(c) contains detailed information about the Sleepy Orange Solar project, including the information required by NAC § 704.8885, NAC § 704.8887 and § NRS 704.741. Key provisions of the Sleepy Orange Solar PPA are summarized in Technical Appendix REN-18-SOS(d).

Southern Bighorn 1 and Southern Bighorn 2

The Companies present the Southern Bighorn 1 and Southern Bighorn 2 PPAs (collectively referred to as "Southern Bighorn") that will provide for additional 400-MW solar PV and 400-MW BESS resources in Nevada Power's system with a COD of July 15, 2028. This project was bid into the Companies' 2024 RFP and was selected based on several factors including the Companies' due diligence assessment, system needs, and customer value. This PPA represents the second iteration of the Southern Bighorn project for the Commission's review. The previous Southern Bighorn Solar PPA, as approved in Docket No. 19-06039, terminated on November 13, 2023, due to several issues encountered by the developer, including global supply chain issues and significant cost increases for materials due to the Covid-19 pandemic. These issues, primarily affecting cost and schedule, have been mitigated by the developer. The necessary BLM Right-of-Way grant was received as of January 23, 2026, authorizing the project to begin physical construction. Thus, the risk of permitting delays associated with DOI Review Policy Memorandum impacts is eliminated, and the project is well positioned to reach COD in time to secure the available solar tax credits and pass the value on to Nevada Power's customers for the contract term.

The Southern Bighorn project was split into two PPAs, consisting of Southern Bighorn 1, a 100-MW solar and 100-MW BESS PPA, and Southern Bighorn 2, a 300-MW solar and 300-MW BESS PPA, for a combined project totaling 400 MW of solar and 400 MW of BESS.

As a means to reduce the impact of potential non-delivery and to protect customers in the event of a development failure, the terms of the PPAs require the developer to securitize the project through the posting of a development security prior to COD at escalating levels tied to key project milestones. Specifically, the developer is required to post $24 million ($18 million for Southern Bighorn 1 PPA and $6 million for Southern Bighorn 2 PPA) in development security upon execution of the PPA, which increases to $68 million ($51 million for Southern Bighorn 1 PPA and $17 million for Southern Bighorn 2 PPA) upon receipt of PUCN approval of the PPA.

As discussed in this section's Part B above, given the uncertainty to project development and timeline posed by the DOI Review Policy Memorandum, the Companies' were challenged to contract with counterparties willing to bear the risk of losing the development security due to such unprecedented external factors preventing their projects from reaching the intended COD. To facilitate a viable transaction, the Companies negotiated terms of the PPAs that allow for the Companies to retain a portion of the development security if the PPA terminates due to the project's failure to obtain all necessary governmental approvals necessary to start construction ("Federal Permit") prior to September 30, 2027. The retained security amount was tailored specific to this PPA and set equal to $10 million ($7.5 million for Southern Bighorn 1 PPA and $2.5 million for Southern Bighorn 2 PPA). This balanced approach to development security

structure is designed to strongly incentivize the developer to mitigate development risks and successfully deliver the project, while providing meaningful financial protection to customers in the event of contract non-performance or termination.

Key Project Characteristics:

The Southern Bighorn project is a proposed utility-scale solar PV generation facility with co-located BESS to be located on the Moapa Band of Paiutes Tribal lands in Clark County, Nevada, within Nevada Power's service territory. The projects are owned by 300MS 8me LLC and 425LM 8me LLC, respectively owning Southern Bighorn 1 and Southern Bighorn 2. The project is being developed by Avantus Clean Energy, LLC, a U.S.-based renewable energy company, headquartered in San Diego, California that has developed over two dozen large-scale projects currently operating or under construction, spanning over 5,000 MW of system capacity (3,900 MW solar and 4,500 MWh of energy storage systems) across the western United States and Texas.

The solar facility will utilize commercially proven PV modules mounted on single-axis tracking systems, while the BESS facility will use lithium-ion battery technology in an AC-coupled configuration. The combined configuration is designed to provide renewable energy, capacity, and ancillary services.

The project site is located entirely on tribal trust lands for which the developer has secured site control through execution of long-term land lease agreements with the Moapa Band of Paiutes. The project includes access to adequate water supplies for construction and operation through existing tribal water rights. The majority of discretionary environmental and land use permitting has been completed. The federal Bureau of Indian Affairs and the BLM, both part of DOI, completed a full National Environmental Policy Act review, including issuance of a Final Environmental Impact Statement and Record of Decision in 2021. Required biological consultations and cultural resource reviews have been completed, and mitigation measures have been incorporated into project design and construction planning. Because the project is located on tribal lands and utilizes an existing shared generation tie-line, a Utility Environmental Protection Act permit from the Public Utilities Commission of Nevada is not required.

Southern Bighorn 1 and Southern Bighorn 2 will both interconnect to Nevada Power's transmission system at the Reid Gardner Substation at the 230 kV level. The project has two executed LGIAs and will utilize a shared generation tie-line with an existing operational solar facility on Moapa tribal lands.

Under the agreement, energy from the solar generating facility will be purchased for a 25-year term at a fixed rate of $47.23 per MWh, and capacity from the BESS facility will be purchased for a 20-year term at a fixed rate of $15,500 per MW-month. The Companies calculated the hybrid

LCOE as $117.93 per MWh. Based on the deliverability assurance attributes described in this project's introductory paragraphs above, the project's pricing assumes that it will qualify for tax credits, and, therefore, is best compared to pricing of other paired solar and BESS projects bid in the 2024 RFP that, based on their risk to reaching COD before the end of 2030, are assumed to not qualify for solar tax credits. For perspective, the Companies calculated the average LCOE of other solar and BESS project proposals from the 2024 RFP that were not selected using the submitted cap pricing of the solar energy and found that this project's LCOE is 25 percent lower in comparison. A copy of the project LCOE comparison to average LCOE using solar cap pricing of non-selected solar and BESS project proposals is presented in Confidential Technical Appendix REN-24. All costs associated with the agreement are proposed to be recovered through Nevada Power's fuel and purchased power BTER mechanisms.

According to estimates provided by the developer, during construction, the project is expected to support a peak of nearly 400 jobs with 155 being sourced locally from Nevada. Long-term operations will require eight permanent positions. Estimated salaries for the temporary construction jobs are anticipated to be $85,200 annually, equating to a total estimated payroll of $13.2 million over one construction year. The permanent long-term workforce for the operations and maintenance of the facility is estimated to provide an average salary of $125,000 annually and a total payroll in excess of $25.0 million over 25 years.

Figure REN-27 shows a map of the project site.

FIGURE REN-27
Southern Bighorn 1 and 2 Project Site

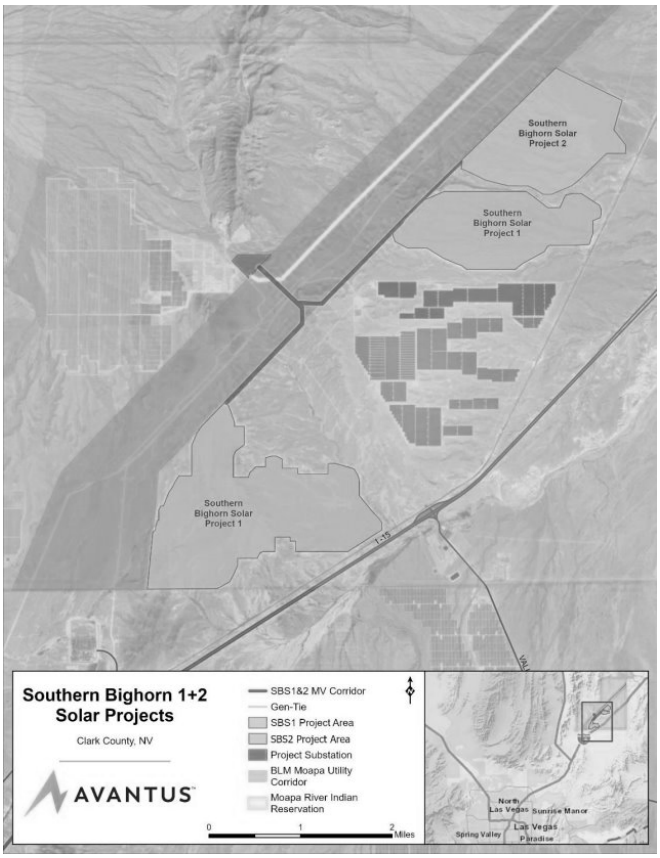

A copy of the two PPAs can be found in Technical Appendices REN-19-SBS(a)(1) and REN-19-SBS(a)(2). The Companies' due diligence summary for the Southern Bighorn 1 & 2 project is included as Confidential Technical Appendix REN-19-SBS(b). Technical Appendix REN-19-SBS(c) contains detailed information about the Southern Bighorn project, including the information required by NAC § 704.8885, NAC § 704.8887 and § NRS 704.741. Key provisions of the Southern Bighorn 1 & 2 PPAs are summarized in two Technical Appendices REN-19-SBS(d)(1) (for Southern Bighorn 1) and REN-19-SBS(d)(2) (for Southern Bighorn 2).

Trego Grid

The Companies present the Trego Grid PPA ("Trego Grid") that will provide a 200-MW, four-hour standalone battery resource in Sierra's system with a COD of June 30, 2028. This project was bid into the Companies' 2024 RFP and was selected based on several factors including the Companies' due diligence assessment, system needs, and customer value. The project provides capacity to Sierra's system in 2028, helping address systemwide open capacity needs. Trego Grid does not require any BLM or other federal approvals subject to the DOI Review Policy

Memorandum review process, thereby mitigating schedule risk due to permitting. The project will qualify for the ITC tax credits, which is reflected in the pricing, passing the value on to Sierra's customers for the contract term.

As a means to reduce the impact of potential non-delivery and to protect customers in the event of a development failure, the terms of the PPA require the developer to securitize the project through the posting of a development security prior to COD at escalating levels tied to key project milestones. Specifically, the developer is required to post $6 million in development security upon execution of the PPA, which increases to $17 million upon receipt of PUCN approval of the PPA. This development security structure is designed to strongly incentivize the developer to mitigate development risks and successfully deliver the project, while providing meaningful financial protection to customers in the event of contract non-performance or termination.

Key Project Characteristics:

The Trego Grid project is a proposed utility-scale, standalone battery energy storage facility to be located in Washoe County, Nevada, within Sierra's service territory. The project is owned by Trego Grid, LLC and is being developed by Coval Infrastructure DevCo Holdings LP, which has a portfolio of 4.2 GW of assets currently in operation, under construction, or in active development.

The facility will utilize commercially proven battery energy storage technology configured to charge from and discharge to the Companies' system. The project is designed to provide dispatchable capacity, energy, and ancillary services.

The Trego Grid project site is located on approximately seven acres adjacent to the existing Mira Loma Substation. Trego Grid, LLC owns the project parcel and has full site control. The project site is within the City of Reno and is expected to be permitted through the local land use process. The facility does not generate electricity and will interconnect below the voltage threshold applicable to the Utility Environmental Protection Act; therefore, a Permit to Construct from the Public Utilities Commission of Nevada is not required. No material environmental constraints have been identified that would preclude development of the project.

The facility will be directly interconnected to the Companies' transmission system at the Mira Loma Substation at 120 kV. The project has an executed and amended LGIA with the Companies. Required transmission facilities include a short generation tie-line and associated substation equipment.

Under the agreement, the Companies would purchase storage capacity from the facility at a fixed rate of $15,070 per MW-month for a 20-year term. The Companies calculated the LCOS of this resource as $151.52 per MWh. When comparing the LCOS of this resource to the Dodge Flat BESS Addition, which was the most recent standalone BESS resource approved by the Commission in the 2024 Joint IRPA, Docket No. 25-10028, the proposed project's LCOS is lower

by approximately 9 percent. A comparison of the LCOS for all standalone battery storage projects presented for approval in this filing, relative to the Dodge Flat BESS Addition, is provided in REN-23: Standalone BESS LCOS Comparison Summary. All costs associated with the agreement are proposed to be recovered through Sierra's fuel and purchased power BTER mechanisms.

According to estimates provided by the developer, construction of the project is expected to support temporary construction employment of an estimated 135 positions, of which an estimated 108 positions will be sourced locally from Nevada at an estimated average salary of $54,080 annually, equaling a total estimated payroll of $5.8 million over one construction year. Ongoing operations, supported through contracted operations and maintenance services, with an estimated three positions at an estimated average salary of $52,000 annually, and a total payroll of $9.8 million over 25 years. The facility will be operated in accordance with applicable safety, environmental, and reliability standards.

Figure REN-28 shows a map of the project site.

FIGURE REN-28
Trego Grid Project Site



A copy of the PPA can be found in Technical Appendix REN-20-TG(a). The Companies' due diligence summary for the Trego Grid project is included as Confidential Technical Appendix REN-20-TG(b). Technical Appendix REN-20-TG(c) contains detailed information about the Trego Grid project, including the information required by NAC § 704.8885, NAC § 704.8887 and § NRS 704.741. Key provisions of the Trego Grid PPA are summarized in Technical Appendix REN-20-TG(d).

White Pine Solar

The Companies present the White Pine Solar PPA ("White Pine Solar") that will provide 350 MW of solar photovoltaic generating capacity paired with a 350-MW, four-hour battery resource in Sierra's system with a COD of December 31, 2028. This project was bid into the Companies' 2024 RFP and was selected based on several factors including the Companies' due diligence assessment, system needs, and customer value. The project can deliver energy in Sierra's system in 2028, helping address systemwide open capacity needs. The project will qualify for tax credits, which is reflected in the pricing, passing the value on to Sierra's customers for the contract term.

As a means to reduce the impact of potential non-delivery and to protect customers in the event of a development failure, the terms of the PPA require the developer to securitize the project through the posting of a development security prior to COD at escalating levels tied to key project milestones. Specifically, the developer is required to post $21 million in development security upon execution of the PPA, which increases to $59.5 million upon receipt of PUCN approval of the PPA.

Due to uncertainty in available transmission capacity for the project associated with a pending DNR study, the Companies were challenged to contract with the counterparty as they were not willing to bear the risk of losing the development security due to lack of available transmission capacity on the transmission system preventing the project from reaching its intended COD with firm capability to transmit power to load. To facilitate a viable transaction, the Companies negotiated terms of the PPA that allow for the Companies to retain a portion of the development security if the PPA terminates due to the project's failure to obtain a final DNR study that confirms 350 MW of firm transmission capacity is available for use by the project by December 15, 2028 ("Favorable DNR Study"), prior to February 28, 2027. The retained security amount was tailored specific to this PPA and set equal to $60,000 to cover the cost of DNR studies performed by the Companies.

Moreover, as discussed in this section's Part B above, given the uncertainty to project development and timeline posed by the DOI Review Policy Memorandum, the Companies were challenged to contract with counterparties willing to bear the risk of losing the development security due to such unprecedented external factors preventing their projects from reaching the intended COD. To facilitate a viable transaction, the Companies negotiated terms of the PPA that allow for the Companies to retain a portion of the development security if the PPA terminates due to the project's failure to obtain governmental approvals necessary for construction and operation of the project ("DOI/BLM Approval") prior to July 1, 2027. The retained security amount was tailored specific to this PPA and set equal to $5 million. This balanced approach to development security structure is designed to strongly incentivize the developer to mitigate development risks and successfully deliver the project, while providing meaningful financial protection to customers in the event of contract non-performance or termination.

Key Project Characteristics:

The White Pine Solar project is a proposed utility-scale solar PV generation facility with co-located BESS to be located on private land in White Pine County, Nevada, within the Sierra's service territory. The project is owned by White Pine Solar, LLC and is being developed by AMPYR Energy USA DevCo, LLC ("AMPYR"). White Pine Solar, LLC is a wholly owned indirect subsidiary of AMPYR Energy USA ("AEUSA"), which operates as part of a global renewable energy platform focused on utility-scale solar PV, BESS, and wind generation. Through its upstream affiliate, AMPYR Global, the AMPYR platform maintains a presence across Europe, North America, Australia, and Asia, with a development portfolio exceeding 12,000 MW of renewable energy capacity, including more than 1,700 MW of BESS, spanning over 365 projects and supported by more than 100 professionals. Founded in 2021, AEUSA is led by senior executives with over 200 years of combined experience developing, constructing, and operating more than 40,000 MW of renewable energy facilities across the United States, including Nevada. AEUSA currently has approximately 2,800 MW of solar PV and standalone BESS projects under development across the WECC, CAISO, ERCOT, PJM, and SERC markets.

The solar facility will utilize commercially proven PV technology mounted on single-axis tracking systems, and the BESS facility will utilize lithium-ion battery technology in an AC-coupled configuration. The combined facility is designed to deliver renewable energy, dispatchable capacity, and ancillary services.

The White Pine Solar Project site comprises approximately 1,990 acres of privately owned and previously disturbed agricultural land located north of Ely, Nevada. The developer has secured site control through executed long-term lease agreements that include sufficient water supply rights for construction and operation. Because the project is located primarily on private land and requires only a short generation tie-line across BLM-managed land, the associated environmental permitting risk is significantly lower than for generation resources sited predominantly on BLM land. Environmental studies completed to date have identified no fatal flaws, and all required local, state, and federal permits are either in progress or planned.

The project will interconnect to Sierra's transmission system at the Gonder Substation at 345 kV via an approximately one-mile generation tie-line. The project has executed an LGIA. While the executed interconnection agreement reflects a conservative COD in early 2031, updated transmission assessments indicate that the project is capable of achieving full commercial operation by December 31, 2028, subject to completion of the required transmission facilities that will be further identified in subsequent transmission studies. The project is designed to leverage the Companies' Greenlink North transmission infrastructure to support long-term deliverability.

Under the proposed agreement, energy from the solar generating facility would be purchased for a 25-year term at a rate of $28.20 per MWh with a two-percent annual escalator, and capacity from

the BESS facility would be purchased for a 20-year term at a rate of $11,350 per MW-month with a two-percent annual escalator. The Companies calculated the hybrid LCOE of this resource as $102.20 per MWh. Based on the deliverability assurance attributes described in this project's introductory paragraphs above, the project's pricing assumes that it will qualify for tax credits, and, therefore, is best compared to pricing of other paired solar and BESS projects bid in the 2024 RFP that, based on their risk to reaching COD before the end of 2030, are assumed to not qualify for solar tax credits. For perspective, the Companies calculated the average LCOE of other solar and BESS project proposals from the 2024 RFP that were not selected using the submitted cap pricing of the solar energy and found that this project's LCOE is 35 percent lower in comparison. A copy of the project LCOE comparison to average LCOE using solar cap pricing of non-selected solar and BESS project proposals is presented in Confidential Technical Appendix REN-24. A copy of the project LCOE comparison to average cap pricing LCOE of non-selected solar and BESS project proposals is presented in Confidential Technical Appendix REN-24. All costs associated with the agreement are proposed to be recovered through Sierra's fuel and purchased power BTER mechanisms.

According to estimates provided by the developer, during construction, the project is expected to support approximately 350 jobs, of which an estimated 210 will be sourced locally from Nevada, at an estimated average salary of $1180,700 annually, equaling a total estimated payroll of over $60 million over the one year construction period. Once operational, the project will create an estimated 10 positions at an estimated average salary of $81,740 annually, equaling a total estimated payroll of $20 million over 25 years.

Figure REN- 29 shows a map of the project site.

FIGURE REN-29
White Pine Solar Project Site

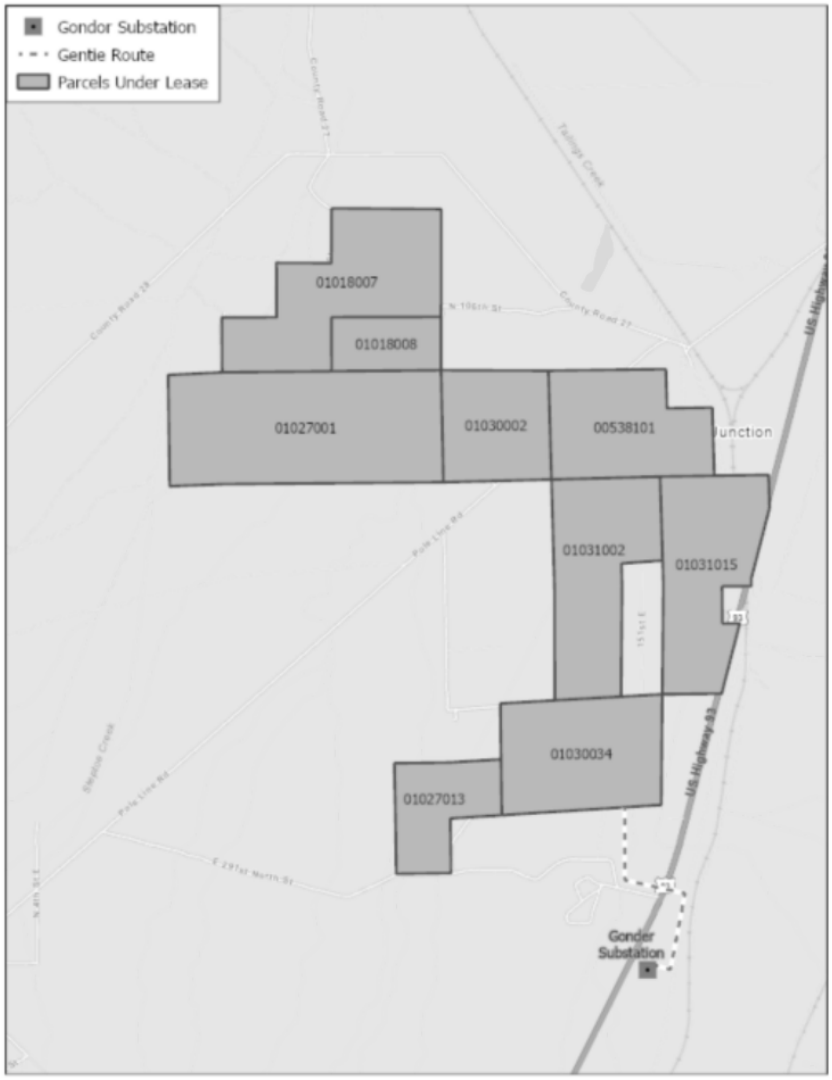

A copy of the PPA can be found in Technical Appendix REN-21-WPS(a). The Companies' due diligence summary for the White Pine Solar project is included as Confidential Technical Appendix REN-21-WPS(b). Technical Appendix REN-21-WPS(c) contains detailed information about the White Pine Solar project, including the information required by NAC § 704.8885, NAC § 704.8887 and § NRS 704.741. Key provisions of the White Pine Solar PPA are summarized in Technical Appendix REN-21-WPS(d).

Winston Solar

The Companies present the Winston Solar LG Facility and the Winston Solar MK Facility PPAs (collectively referred to as "Winston Solar"), that will provide for up to an additional 400-MW solar and 400-MW BESS in Sierra's system, with a COD of October 1, 2029. This project was bid into the Companies' 2024 RFP. The project is one of the very few 2024 RFP bids that are located entirely on private land, including site access roads and generation tie-line routes. Thus, the risk of permitting delays associated with DOI Review Policy Memorandum impacts is eliminated, as the project is well positioned to reach COD in time to secure the available solar tax credits and pass the value on to Sierra's customers for the contract term.

The Winston Solar project was split into two PPAs, consisting of the LG Facility PPA and the MK Facility PPA, each involving a 200-MW solar and 200-MW, four-hour BESS, named after its respective LGIA queue position, for a combined project totaling 400 MW of solar and 400 MW of four-hour BESS. The PPAs are nearly identical except for a key distinction. The MK Facility PPA includes a provision for a contractual adjustment to the size of the facility pending the outcome of a Planned Unit Development ("PUD") permit to be issued by Lyon County, Nevada. If by November 1, 2026, the project is able to secure the PUD permit as intended, then each solar facility will remain 200 MW (or 400 MW in total for both the LG Facility PPA and the MK Facility PPA solar facilities). Otherwise, the MK Facility PPA's solar facility will be reduced in size to no less than 100 MW (or 300 MW in total for both the LG Facility PPA and the MK Facility PPA solar facilities). If the size of the solar resource is reduced pursuant to the contract, then other conforming changes will be implemented such as reduced development and operating securities and reduced annual supply and PC amounts[61]. The price of the energy will not change, nor will the size of the BESS capacity or other parameters that are unrelated to the project's solar facility capacity.[62]

There are aspects of the PPAs that are currently being negotiated for anticipated amendments, including addressing potential impacts to COD due to necessary installation of high voltage equipment identified in a recently completed DNR study, as well as grid-charging capability of the BESS. The Companies and the project developer have reached commercial agreement to allow grid-charging of the BESS in both PPAs beginning at COD and continuing for the term. Grid-charging adds value by providing further operational flexibility of the resource. The Companies are continuing to work with the developer to amend the agreements to facilitate conforming

[61] For a discussion on the project assumptions that were modelled in the Companies' plans included in this filing, refer to the Economic Analysis Section of the Energy Supply Plan Narrative.
[62] Other parameters that are unrelated to the project's solar facility capacity include COD, performance requirements of the BESS, contract term length, and obligation to provide ancillary services.

changes to the PPAs necessary to enable grid-charging of the BESS, with expected completion in the second half of 2026.

As a means to reduce the impact of potential non-delivery and to protect customers in the event of a development or performance failure, the terms of the PPAs require the developer to securitize the project through the posting of a development security prior to COD at escalating levels tied to key project milestones. Specifically, the developer is required to post $24 million ($12 million per PPA) in development security upon execution of the PPAs, which increases to $68 million ($34 million per PPA) upon receipt of PUCN approval. This development security structure is designed to strongly incentivize the developer to mitigate development risks and successfully deliver the project, while providing meaningful financial protection to customers in the event of contract non-performance or termination.

Key Project Characteristics:

The Winston Solar project is a proposed utility-scale solar PV generation facility with co-located BESS, to be located on private land in Lyon County, Nevada, within Sierra's service territory. The project is owned by Winston FC Solar, LLC, and is being developed by EDF Renewables North America. The Companies have other contracted projects with EDF Renewables North America, as follows: Arrow Canyon Solar, a 200-MW PV and 75-MW BESS project approved in Docket No. 19-06393; Switch Station 1/Playa 2, a 100-MW PV facility approved in Docket No. 15-08005; and Switch Station 2/Playa 1, a 79-MW PV project approved in Docket No. 15-11025/15-11027/15-11029.

The BESS is expected to provide up to four hours of duration and will be AC-coupled with the solar facility. The project is designed to deliver renewable energy, dispatchable capacity, and ancillary services.

The project site encompasses approximately 2,300 acres of privately owned land in central Lyon County, Nevada, adjacent to the Walker River Substation (formerly Fort Churchill Substation). A Conditional Use Permit for solar development from Lyon County is pending, as discussed above. Water necessary for construction will be supplied through secured water rights associated with the underlying private land. Environmental and site studies completed to date have not identified any biological or environmental fatal flaws. The project will be permitted through applicable local, state, and federal processes, including issuance of a Utility Environmental Protection Act permit to construct.

The project will interconnect to the Companies' transmission system at the Walker River Substation (formerly Fort Churchill Substation) at 230 kV. Two LGIAs have been executed. The current interconnection in-service date under the executed agreements is December 31, 2029;

however, coordination with the Companies' transmission team is ongoing to potentially advance the in-service date.

Under the agreements, energy from the solar generating facility would be purchased for a 25-year term at a fixed price of $39.60 per MWh, and capacity from the BESS facility would be purchased for a 20-year term at a fixed rate of $14,220 per MW-month. The Companies calculated the hybrid LCOE of this resource as $111.50 per MWh, for the anticipated full 400 MW project size. Based on the deliverability assurance attributes described in this project's introductory paragraphs above, the project's pricing assumes that it will qualify for tax credits, and, therefore, is best compared to pricing of other paired solar and BESS projects bid in the 2024 RFP that, based on their risk to reaching COD before the end of 2030, are assumed to not qualify for solar tax credits. For perspective, the Companies calculated the average LCOE of other solar and BESS project proposals from the 2024 RFP that were not selected using the submitted cap pricing of the solar energy and found that this project's LCOE is 29 percent lower in comparison. A copy of the project LCOE comparison to average LCOE using solar cap pricing of non-selected solar and BESS project proposals is presented in Confidential Technical Appendix REN-24. All costs associated with the PPA will be recovered through Sierra's fuel and purchased power BTER mechanisms.

According to estimates provided by the developer, during construction, the project is expected to support approximately 400 jobs, of which an estimated 50 percent of positions will be sourced locally from Nevada at an estimated average salary of $124,060 annually, equaling a total estimated payroll of $14.33 million over one construction year. Following commercial operation, the project will support a permanent long-term increase in the workforce for the operation and maintenance of the facility of an estimated five positions at an estimated average salary of $110,032 annually and a total payroll of $21.45 million over its operational life.

FIGURE REN-30
Winston Solar Project Site

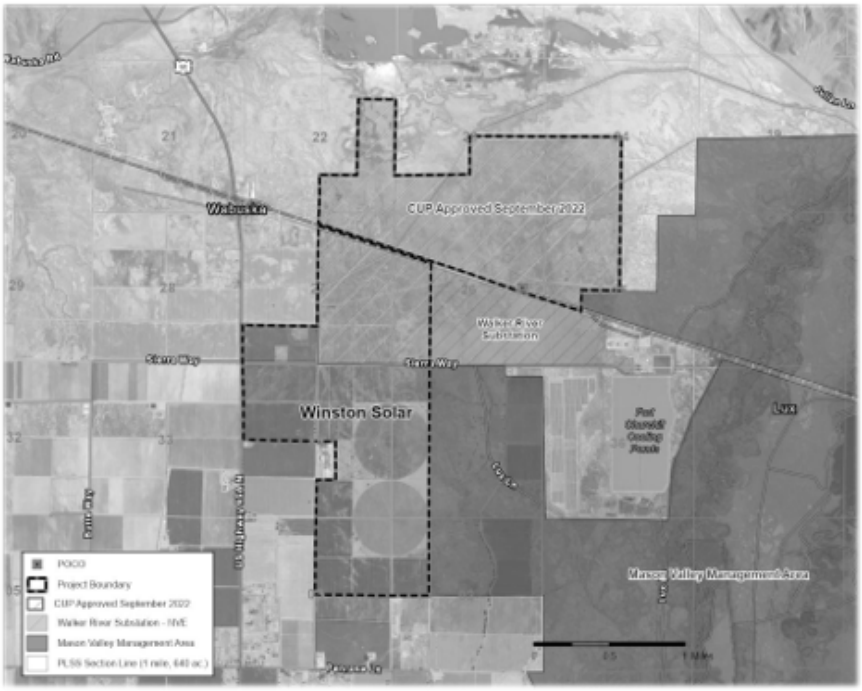

A copy of the two PPAs can be found in Technical Appendices REN-22-WS(a)(1) and REN-22-WS(a)(2). The Companies' due diligence summary for the Winston Solar project is included as Confidential Technical Appendix REN-22-WS(b). Technical Appendix REN-#22-WS(c) contains detailed information about the Winston Solar project, including the information required by NAC § 704.8885, NAC § 704.8887 and § NRS 704.741. Key provisions of the two Winston Solar PPAs are summarized in Technical Appendices REN-22-WS(d)(1) and REN-22-WS(d)(2).

Solicitation of Proposals for Sierra Solar Phase II Development Asset Sale with PPA/BTA Options

In the 2024 RFP, the Companies solicited proposals to develop the Sierra Solar Phase II project. Similar to the Amargosa project solicitation, the Companies sought third-party development of the 600-MW solar and 600-MW BESS facility through an APA in conjunction with a BTA or a PPA for the offtake of the energy. The solicitation outlined a proposal with a COD of January 31, 2030, contingent upon the completion of the new Lantern-Comstock Meadows 345-kV Line.[63] However,

[63] The Lantern-Comstock Meadows 345-kV Line project, also known as 20780-BTX-Lantern Switching Station - Phase 2, Lantern - Comstock Meadows 345 kV line-SPPCO, was approved as a contingent facility for several transmission load service requests from Rule 9 customers, which will be required even if the Sierra Solar Phase II project does not proceed. Construction approval was granted by the Commission in Docket No. 24-05041.

at the end of March 2025, during the 2024 RFP's evaluation process, the Companies learned—through the Companies' posting of the Quarterly Contingent Facility Update on OASIS—that the Lantern-Comstock Meadows 345-kV Line would not be completed until 2031 at the earliest.[64] Absent the new transmission line, the project would not be able to reach COD prior to the end of 2030 and secure eligibility for the PTC, thereby negating the urgency of development to lock in tax credit savings for the Companies' customers.

While the Companies did not pursue any solicited proposals for Sierra Solar Phase II in the 2024 RFP, the Companies continue to evaluate its options and future plans for Sierra Solar Phase II.

E. Renewable and Storage Candidate Resource Pricing Outlook

As discussed in the 2024 Joint IRPA, Docket No. 25-10028, the outlook for renewable and storage candidate pricing is expected to increase due to the following three primary factors:

1) Change in tax law resulting from the OBBBA.
2) Change in federal policy as a result of the U.S. Administration Executive Order ("EO") 14315.
3) Change in several import tariffs on raw materials and equipment.

First, the OBBBA,[65] which was signed into law on July 4, 2025, ended PTC and ITC for solar and wind resources that are placed in service after December 31, 2027. There are exceptions to this deadline due to safe harbor provisions, discussed further below, for wind or solar projects that start construction prior to July 4, 2026. For other technologies, such as BESS, the ITC phases out over time for projects that are placed in service during the years listed as follows:

- 100 percent in 2033;
- 75 percent in 2034;
- 50 percent in 2035; and
- 0 percent in 2036 and beyond.

Furthermore, the OBBBA restricts federal tax-credit eligibility based on the percentage of total direct costs attributable to manufactured products incorporated into the energy storage technology that are from an FEOC country, such as China, North Korea, Iran, and Russia. These restrictions impact energy storage significantly because China's share of the global battery manufacturing

[64] In the 2024 Joint IRP Action Plan Progress Report, Docket No. 26-02031, the Companies reported that the planned in-service date for the project was September 2031.
[65] Congress, *Public Law 119-21- July 4, 2025*, available at https://www.congress.gov/119/plaws/publ21/PLAW-119publ21.pdf.

supply chain is approximately 70 to 90 percent.[66] Following is a list describing the material assistance cost ratio threshold percentage—the percentage of direct costs attributable to manufactured products incorporated into the energy storage technologies that are not from a prohibited foreign entity—for BESS that are placed in service in applicable years:

- 55 percent in 2026;
- 60 percent in 2027;
- 65 percent in 2028;
- 70 percent in 2029; and
- 75 percent after December 31, 2029.

The exception to this provision is that it does not apply to projects that start construction prior to December 31, 2025. These thresholds place additional constraints that pose equipment supply challenges and create upward pressure on prices. On February 12, 2026, the Department of the Treasury and the IRS issued a notice[67] with interim guidance on determining FEOC compliance for tax-credit planning purposes. However, many of the details remain unclear, and the notice also provides that the Treasury and IRS intend to propose regulations and further guidance in the future.

While the OBBBA includes numerous other changes not detailed above, the elimination of tax credits and restrictions on supply chains has the net effect of adding risk to tax-credit eligibility which increases the pricing outlook.

Second, the U.S. Administration's July 7, 2025, EO 14315 "Ending Market Distorting Subsidies for Unreliable, Foreign Controlled Energy Sources"[68] directed both the Secretary of the Treasury and the Secretary of the Interior to issue new guidance or otherwise implement the steps necessary to enforce the termination of the tax credits and eliminate preferential treatment for wind and solar facilities.

On August 15, 2025, the U.S. Treasury Department issued Notice 2025-42,[69] in response to EO 14315. In the new guidance, the Treasury clarified that the tax-credit termination applies to wind and solar projects that start construction after July 4, 2026. Projects that start construction prior to this date, and maintain a continuous program of construction, and that are placed in service no more than four calendar years after the calendar year during which construction began, maintain eligibility to claim the tax credits. The methodology utilized to qualify for tax credits under this

[66] Congress, *Advanced Lithium-Ion Energy Storage Battery Manufacturing in the United States,* July 30,2025, available at https://www.congress.gov/crs_external_products/R/PDF/R48538/R48538.6.pdf.
[67] IRS, *Notice 2026-15,* available at https://www.irs.gov/pub/irs-drop/n-26-15.pdf.
[68] The White House, *Ending Market Distorting Subsidies for Unreliable, Foreign Controlled Energy Sources,* July 7, 2025, available at https://www.whitehouse.gov/presidential-actions/2025/07/ending-market-distorting-subsidies-for-unreliable-foreign-controlled-energy-sources/.
[69] IRS, *Notice 2025-42,* available at https://www.irs.gov/pub/irs-drop/n-25-42.pdf.

guidance is referred to as "safe harbor", meaning that the tax credits that the project was eligible to receive at the time that the project met the definition of start of construction, and all other qualifying criteria of the guidance, will still be applicable when the project is placed in service even after the tax-credit termination date of December 31, 2027, specified in the OBBBA. The guidance further clarifies what activities constitute start of construction and continuity of construction, as it relates to wind and solar projects.

On July 15, 2025, the DOI issued the DOI Review Policy Memorandum with the subject *Departmental Review Procedures for Decisions, Actions, Consultations, and Other Undertakings Related to Wind and Solar Energy Facilities,*[70] in response to EO 14315. In the DOI Review Policy Memorandum, circulated internally to all DOI Bureau and Office Heads, the Deputy Chief of Staff directed all decisions, actions, consultations, and other undertakings related to wind and solar energy facilities to be submitted to the Office of the Executive Secretariat and Regulatory Affairs, subsequent review by the Office of the Deputy Secretary, and final review by the Office of the Secretary. Referred to as the three-layer review process, the memo effectively stalled all permitting actions, such as environmental reviews, right of way grants, and lease assignments for solar and wind projects that have a federal nexus. Projects located in Nevada are disproportionately impacted by this memo, as over 80 percent of total land in the state is under federal control. The vast majority of solar and wind projects located in the state have at least some part of land, generation tie-line, access road, or other aspect that requires review and authorization by an agency under the DOI. The memo removes the authority from State, District, and Field offices of agencies such as the BLM and others to issue final actions for solar or wind projects and adds additional reviews and final authorization from the highest levels of the DOI. With the added uncertainty on permitting timelines, solar projects' ability to achieve planned CODs is jeopardized, increasing risks to schedule, tax-credit eligibility and project economics, translating to increased non-deliverability risk and resulting in additional forecasted costs due to delays and contingencies.

Taken together, the U.S. Administration EO 14315, the resulting guidance from the U.S. Treasury and the DOI Review Policy Memorandum introduce a significant amount of uncertainty in tax credit eligibility for solar and wind as well as the ability to develop a renewable project with a federal nexus. To illustrate, if a solar project undertakes efforts to safe harbor the tax credits by starting construction prior to July 4, 2026, per the Notice 2025-42 guidance, but is later delayed in its continuous construction efforts due to non-receipt of a requisite permit authorization from the DOI such that it can no longer be placed in service before the end of the fourth calendar year, then the tax credits may not be realized. Hence, the uncertainty adds risk, which in turn adds cost to the pricing outlook for solar and wind.

[70] *See supra* note 10, citing United States Department of the Interior, *Memorandum*, July 15, 2025, available at https://www.doi.gov/media/document/departmental-review-procedures-decisions-actions-consultations-and-other.

The third primary factor contributing to the renewable and storage candidate resource pricing outlook expected to increase, is tariffs. Tariffs are taxes on imported products or raw materials. Beginning on February 1, 2025, the U.S. Administration has issued several EOs and taken actions to enact tariffs, and retaliatory tariffs, with both sweeping applicability to all countries as well as targeted to specific countries to varying degrees for specific products. Relevant tariffs include those placed on China,[71] the world's largest supplier of both solar and battery components such as polysilicon, solar cells, and panels, as well as anodes and cathodes for lithium-ion batteries used in utility-scale BESS. Additionally, tariffs on raw materials such as aluminum and steel[72] have been placed on all countries with few exceptions, as well as tariffs on certain copper imports. While there have been recent developments related to tariffs such as the February 20, 2026 U.S. Supreme Court ruling that the International Emergency Economic Powers Act ("IEEPA") does not give the President authority to impose tariffs,[73] other measures continue to apply[74] and the uncertain impact due to tariffs remains. The combined effect of these tariffs has resulted in increased pricing outlook for solar and storage resources, as developers look to remove exposure to Chinese tariffs and shift suppliers, sacrificing lower prices for increased certainty.

The end result of the three primary factors currently impacting renewable and storage candidate resources discussed above is an increased price outlook for all future resources. Therefore, the pricing for each placeholder candidate resource utilized the "conservative" forecast[75] as published by the National Renewable Energy Laboratory ("NREL").[76] In regard to tax-credit assumptions, the current expectation for solar and wind resources in general is that tax-credit eligibility is viable through the end of 2030, after which it will not be possible. [77] However, as these causative changes are very recent, the tax-equity market's risk tolerance has yet to be tested to finance projects with a COD near a 2029 or 2030 safe-harbor eligibility cutoff. Therefore, while candidate pricing

[71] The Federal Register, *Modifying Reciprocal Tariff Rates To Reflect Trading Partner Retaliation and Alignment*, April 15, 2025, available at https://www.federalregister.gov/documents/2025/04/15/2025-06462/modifying-reciprocal-tariff-rates-to-reflect-trading-partner-retaliation-and-alignment.
[72] The Federal Register, *Addressing Certain Tariffs on Imported Articles*, April 29, 2025, available at https://www.federalregister.gov/documents/2025/05/02/2025-07835/addressing-certain-tariffs-on-imported-articles.
[73] United States Library of Congress, *Supreme Court Rules Against Tariffs Imposed Under the International Emergency Economic Powers Act (IEEPA)*, February 20, 2026, available at https://www.congress.gov/crs-product/LSB11398
[74] Directly following the termination of the tariffs under IEEPA, the U.S. Administration implemented a 10 percent additional global tariff under Section 122 of the Trade Act of 1974. See U.S. Federal Register, *Imposing a Temporary Import Surcharge To Address Fundamental International Payments Problems*, February 20, 2026, available at https://www.federalregister.gov/documents/2026/02/25/2026-03824/imposing-a-temporary-import-surcharge-to-address-fundamental-international-payments-problems
[75] NREL publishes data using three assumption levels to project technological advancement: Conservative, Moderate, and Advanced, with the Conservative assumption representing the slowest rate of investment and technological advancement leading to costs and performance lagging behind the Moderate and Advanced cases.
[76] National Renewable Energy Laboratory, *Annual Technology Baseline*, April 12, 2026, available at https://atb.nrel.gov/electricity/2024b/definitions
[77] Exceptions include the implementation of safe harbor strategies prior to the passage of the OBBBA, such as those implemented for and applicable to the Sleepy Orange project discussed in this section's Part E above, that may allow for tax credit eligibility after 2030 under limited and project-specific circumstances.

assumes tax credit eligibility for wind and solar through 2030, this outlook may change in future filings as the market continues to digest the risks. The outlook for ITC tax-credit eligibility for other candidate resource types such as BESS and pumped storage hydropower extends through 2033 and phases out completely in 2036 and beyond per the OBBBA.

F. Named Placeholders

Historically, the Companies have sought approval of generation and storage projects in IRPs only for those projects that can start construction during the three-year action plan. As further discussed in other parts of this Renewables Section,[78] the Companies are taking a longer-term and more detailed integrated planning approach, through more efficient planning and project execution, to meet the RPS, load growth, and customer needs for renewable energy at the best value to customers.

The various plans considered in the 2026 Joint IRP primarily rely on PPAs for additional supply of low-cost renewable energy, which are projected to continue to be a component of supplying low-cost renewable energy in the future. However, to add planning clarity and comply with the Commission's guidance for the use of placeholders,[79] the Companies are identifying "named placeholder" projects under the alternative plans.[80] All alternative plans include "named placeholders" that address Directive 6 of the Commission's April 9, 2024, Modified Final Order in the Fifth Amendment to the Companies' Triennial 2021 Joint Integrated Resource Plan ("2021 Joint IRP 5A"), Docket No. 23-08015.[81] Named placeholders are provided to represent reasonably

[78] *See, e.g.*, Parts A, D, H and I.

[79] *See* 2026 Joint IRP's Supply Plan, Economic Analysis, Part C. Key Modeling Assumptions, "Placeholder Resources," starting at 14, for a detailed explanation of the way the Companies have defined and used "placeholders" in this and other IRPs. Aside from the draft regulations currently pending before the Commission in Docket No. 23-07026, the term "placeholder" is not currently defined in either the Nevada Revised Statutes or the Nevada Administrative Code. The Commission has addressed how the Companies should use placeholders in IRP proceedings through findings and directives in various IRP decisions, including the Companies' Triennial 2018 Joint Integrated Resource Plan, Docket No. 18-06003, Final Order (February 15, 2019), where the Commission stated the following in Paragraph 55: "…. Although NV Energy is not seeking approval for any of these resources in this Docket and generally keeps placeholders identical among various Plans to provide a fair and more accurate comparison, the Commission encourages NV Energy to select placeholders in future resource filings that more accurately reflect the general policy of this State toward more renewable generation and energy efficiency as well as NV Energy's own aspirational goals of supplying an ever-greater percentage of energy from renewable sources."

[80] *See* 2026 Joint IRP Supply Plan, Economic Analysis, Part E. Plan Development, "Alternative Plans," starting at 56, for a detailed explanation of the alternative plans in this IRP.

[81] *See* 2021 Joint IRP 5A Modified Final Order, Par. 331 ("…[Commission] orders NV Energy to include reasonably known projects as placeholders and to reflect more accurate pricing/cost structures for its renewable placeholders…."), Par. 333 ("The Commission finds that, at a minimum, a project for which an agreement, such as an APA, is in place, a land acquisition and/or permitting has been completed, and any project that NV Energy plans on seeking approval in the three-year action plan period should be considered a reasonably known project and included as a placeholder in the economic analysis."), and Par. 334 ("….The Commission finds that is not appropriate for NV Energy to use renewable PPA pricing for all renewable placeholders given that NV Energy has been requesting more

known projects in progress or requested, and to reflect anticipated company-owned projects. These are presented with estimated cost/pricing data, including anticipated associated transmission infrastructure costs, and are described further in this Renewables Section. The Companies are not requesting approval of any of the named placeholders, and placeholders are subject to change as needs and circumstances change.

The Companies are naming placeholder resources for three distinct new utility-scale projects: one that is not located on company-owned or controlled land, and two that are located on company-owned or controlled land. The Companies present these resources with the intent of growing its portfolio of renewable energy resources to meet several business and policy objectives including the following: 1) Support closing the Companies' open capacity positions, 2) Comply with the Nevada RPS, 3) Meet customers' sustainability business goals to be carbon-free, 4) reduced exposure to market price volatility, and 5) Progressing towards the State of Nevada's 2050 clean energy goal,[82] as described in the ECON narrative. The timing of these projects was driven by the Companies' open position and RPS needs.

Table REN-3 Named Placeholder Summary

Technology	Project Description	Type	Generation Capacity (MW)	Storage Capacity (MW)	Expected Commercial Operation	Term (years)	NREL Cost[77]	
							Generation[79]	Storage[80]
Solar BESS	Sierra Solar II BESS	PPA	NA	591	1/1/2031	20	NA	$179.95
Solar PV	Sierra Solar II PV	PPA	600	NA	1/1/2033	30	$57.17	NA
Wind	Idaho Wind	PPA	747	NA	1/1/2034	25	$73.17	NA
	Idaho Wind	PPA	184	NA	1/1/2035	25	$72.80	NA
	Idaho Wind	PPA	21	NA	1/1/2036	25	$72.33	NA

As discussed in the Economic Analysis, the Companies modeled both future candidate resources and the named placeholder costs based on NREL published cost data that was adjusted based on recent RFP proposal pricing as applicable. Idaho Wind, the project not located on company-owned or controlled land, is included due to the Companies' allocation of 952 MW of transmission rights on the Southwest Intertie Transmission Project ("SWIP North"), which is currently under development and expected to become operational in

NV Energy-owned projects in recent IRPs and IRP amendments. The price for PPA resources is known and fixed at the time of Commission approval, whereas, NV Energy-owned projects may be subject to cost overruns and are recovered through the BTGR for which NV Energy earns a return on its investment….").

[82] *See* NRS § 704.7820(2), codifying 2019 Nev.Stat., ch. 3, § 8(2) (S.B.358) (setting Nevada's 2050 clean energy goal), which declares Nevada's policy goal of achieving by 2050 an amount of energy production from zero carbon dioxide emission resources equal to the total amount of electricity sold by providers of electric service in the State.

2028. Idaho wind projects are anticipated to have high capacity factors that are complementary to the Companies' existing resource mix. The Companies anticipate bringing projects forward in the next IRP to satisfy the SWIP North allocation. Sierra Solar Phase II's BESS resource and Sierra Solar Phase II's solar PV resource are included due to land rights owned by the Companies for these phases.

The Companies could submit these named placeholders for regulatory approval in future IRP filings. Additionally, the request for approval of named placeholders in future IRP filings will accommodate the evolving needs of the Companies, such as updated load forecasts and other changes that impact the Companies' resource needs.

The historical practice of identifying projects only within the three-year action period limits the Companies' ability to achieve key project development milestones that de-risk schedule and cost. The identification of named place holders past the three-year action period provides regulators, stakeholders, and customers transparency into the Companies' renewables project plans.

G. Renewable Energy Planning: RPS Compliance

The alternative plans presented in this filing include the Obsidian, Ward, Wildhorse, Low Carbon and No Open Position Plans as described in the Economic Analysis.[83]

The Companies vigilantly plan for their ongoing RPS PC requirements, recognizing there are still uncertainties and risks inherent in renewable energy production and renewable project development. The planning strategy incorporates all rules, regulations, and requirements codified in NRS §§ 704.7801 through 704.7828. In determining future PC needs, the Companies carefully consider the following overarching objectives:

- Full compliance with an escalating and compressed RPS schedule: 34 percent through 2026, 42 percent in years 2027-2029, and 50 percent in 2030 and beyond;

- Ensuring enough renewable capacity to satisfy a strong and growing demand from the Nevada business community to meet their energy needs from carbon-free, sustainable energy; and

- Developing a long-term strategy to build a generating portfolio that is capable of progressing towards the Nevada policy goal "of achieving by 2050 an amount of energy production from zero carbon dioxide emission resources equal to the total amount of electricity sold by providers of electric service in this State."[84]

[83] *See* Economic Analysis, Part E. Plan Development, for a detailed explanation of the alternative plans presented in this filing.
[84] NRS § 704.7820(2).

The annual RPS PC requirements were calculated in compliance with NRS § 704.7821, which sets forth the annual PC requirement for the Companies based on a percentage of total electricity sold to their respective retail customers during a calendar year. The expected PC supply was determined starting with the current portfolio of approved projects, both operating and under development or contemplated by the Companies. The following assumptions are built into the PC supply forecast:

- Existing PPAs expire in accordance with the contract terms and are not automatically renewed. The Companies reached out to all geothermal supplier counterparties whose contracts will be expiring in the next five years to commence discussions related to future renewals or extensions;[85] the Beowawe, Burdett, Desert Peak 2, and Galena 3 contracts have been renegotiated in the Ormat Geothermal Portfolio, Docket No. 22-11032. A contract extension for the Stillwater Geothermal project is under evaluation.

- The Companies adjusted the expected amount of energy and PCs from renewable facilities for the period of 2027-2028 in cases where the historic generation, based on two or more years of data, consistently varied from that of the contractual or expected supply table. This is consistent with the methodology that the Companies used for the past several years in developing their IRPs and Energy Supply Plans ("ESPs"). This adjustment recognizes that options to address underperformance within a shorter planning window are limited. It also aligns the short-term and long-term plans. Adjustments for 2029 were not identified, as actual resource performance from 2025 that would inform a 2029 adjustment was unavailable at the time of the analysis.

- The projected number of PCs derived from the Renewable Generations incentive programs plateaued in 2020, with the last of the incentivized solar systems installed. Thus, the expected number of PCs from incentivized rooftop solar is forecasted to continue to decrease by 0.5 percent per year as these systems age and their output slowly begins to decline.[86]

- Solar systems placed into service before December 31, 2015, qualify for the solar multiplier; systems placed into service after do not qualify.

- Surplus/Deficit PCs are not being carried forward.

[85] This does not imply that the Companies would rule out renewing or extending existing agreements. Rather, it recognizes the uncertainty as to whether the resource could continue to support ongoing generation and whether the Companies and the counterparties can come to terms on renewing the agreement to address changes in expected output or other necessary contract revisions, or simply extending the term of the agreement under a materially similar contract.

[86] Annual degradation is based on the median degradation rate published by National Renewable Energy Laboratory, available at https://www.nrel.gov/solar/market-research-analysis/blog/posts/stat-faqs-part2-lifetime-of-pv-panels.

- The RPS outlook assumes that generation from both company-owned solar PV systems and PPA projects would degrade starting the year following the first full year of operation. Annual degradation is based on project specific data provided by the solar panel suppliers or project developers.

- Geothermal generation would continue to qualify for station usage credits, while all other technologies would no longer qualify.

- The RPS outlook accounts for all pending and existing NGR and ESAs as of December 31, 2025, where PCs associated with all or a portion of the output from a renewable facility(ies) has been assigned to a customer under the NGR, the MPE or LCMPE tariffs, or other customer energy agreements, and therefore, cannot be used by the Companies in meeting their RPS credit requirements.[87] As of April 2026, the NGR forecast, incorporated into the assessment of need discussed in the Economic Analysis, reflects existing commitments through 2027. Beginning in 2030, the forecast assumes the annual limits established in Docket No. 25-03025, with reduced limits for Sierra during the 2028-2029 period as established in Docket No. 26-04021;

- The RPS outlook adjusts the retail sales total that is used to calculate the RPS requirement to exclude sales to bundled NGR or ESA customers, and other customers participating in a program of optional pricing that includes the transfer of PCs above that required for RPS compliance in an amount that is equal to the number of credits transferred to or retired on behalf of the participating customers.

- The RPS outlook assumes that the net energy produced by Hoover and allocated to Nevada Power counts towards meeting the RPS.

- The RPS outlook assumes no changes to the existing statutory and regulatory RPS regime.

- The base plan RPS outlook has been adjusted to account for recent cancellations and delays associated with the 120-MW Ormat Western Geothermal Portfolio (OWGP), originally consisting of eight geothermal plants with staggered COD dates.[88] Ormat Technologies has provided notice to the Companies that two of its portfolio projects, North Valley 2 and Gerlach, have been cancelled, and the Lone Mountain project COD has been delayed from January 2026 to October 2028. Sierra will be the sole offtaker

[87] The PCs associated with output assigned to a customer under a customer agreement are not counted towards the Companies' total PCs used to determine RPS compliance.
[88] Ormat Western Geothermal Portfolio (OWGP) was approved in the Fourth Amendment to the 2021 Joint IRP, Docket No. 22-11032.

of the energy and PCs from the Ormat Western Geothermal Portfolio (OWGP). The total number of PCs for the portfolio includes estimated station usage PCs. Certain geothermal station usage, the energy for the extraction and transportation of geothermal brine or used to pump or compress geothermal brine, is eligible for certification under the NRS § 704.78215(3)(b). Station usage PCs for these facilities were estimated at 15 percent of net.

- The plan RPS outlook has been adjusted to account for recent cancellations and delays associated with the 127.9-MW solar and 127.9-MW BESS Boulder Solar III facility approved in Docket No. 24-05041. As discussed above, the agreement for the project that was intended to reach COD on June 1, 2027, has been terminated. Nevada Power was the sole offtaker of the energy and PCs from the terminated agreement. A new PPA with a planned COD of June 1, 2028, is being sought for approval in this filing.

- The annual amount of energy produced by solar PV systems paired with BESS has been reduced to account for battery losses which are site-specific but typically further degrade by less than one percent annually. The adjustment recognized that not all of the energy produced by solar PV arrays paired with energy storage will be delivered real-time to the grid. Some of the energy will be stored and dispatched at a later time when needed. The process of charging and discharging the batteries will result in energy losses.

- An adjustment has been added to the model to capture the generation and PCs lost due to curtailment. The curtailed amount is estimated by the PLEXOS ST model as an annual amount and varies year to year. This adjustment recognizes that as renewable energy becomes the dominant source of generation, there may be times when the transmission system cannot accommodate all of the energy being produced making generation curtailment necessary to maintain grid integrity.

- The plan assumes an extension of the Liberty Utilities ("Liberty") contract through December 31, 2027, reflecting potential delays with Greenlink West that would enable Liberty's transition to Network Integration Transmission Service.

- In the absence of a Commission-approved allocation,[89] the Libra Solar & Storage Project is allocated 100 percent to Sierra for purposes of projecting RPS compliance in this Part H, in contrast to the proposed allocation of 100 percent to Nevada Power as assumed in analyses conducted in Part E above[90] and as proposed in the 2024 Joint IRP (Docket No. 24-05041);).[91]

- The plan excludes the Libra Solar & Storage Project Third Amendment as the project was not evaluated in the economic analysis due to its 2048 in-service date;

- The plan includes a modified load forecast that is detailed in Section 3, the Load Forecast Section of the Supply Plan Narrative.

- The plan assumes a reduction in previously forecasted PCs due to the Community Solar Program proposed by the Companies in the 2024 Joint IRP (Docket No. 24-05041) not receiving approval in the Commission's Order.

Technical Appendices REN-1 and REN-2 provide the annual supply tables of proposed renewable energy projects requested in this filing, and the RPS buildout scenarios, respectively. The following sets of chart-related figures illustrate the RPS compliance projections for Nevada Power, Sierra, and the combined Companies.

The first set of figures assumes that no action is taken to add new renewable or storage resources – neither the ones requested for approval in this filing nor placeholders. All figures are based on the Companies' current renewable portfolio, viable pipeline projects, and above planning protocol under a base load.

[89] *See* Docket No. 24-05041, Dec. 20, 2024, Order at 252, Par. 680 ("The Commission approves the Libra PPA without allocating its energy, capacity, and PCs to either NPC or SPPC at this time…").
[90] *See supra* note 57.
[91] *See* Docket No. 24-05041, 2024 Joint IRP, Supply Plan, Renewables, Volume 8 at 82-84 of 393.

FIGURE REN-31

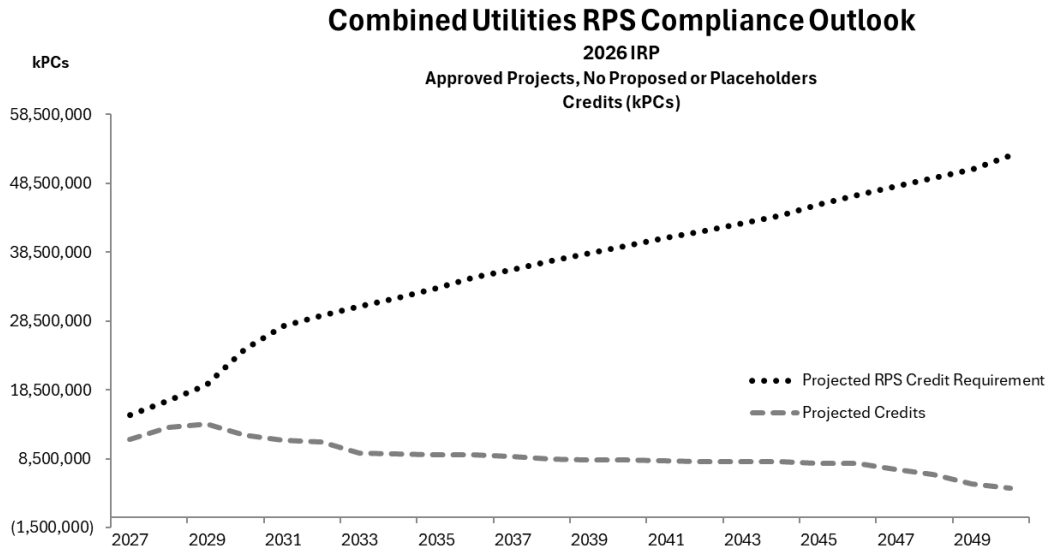

Assuming no actions to add new renewable or storage resources are taken, the Companies are projected to be non-compliant starting in 2027.

FIGURE REN-32

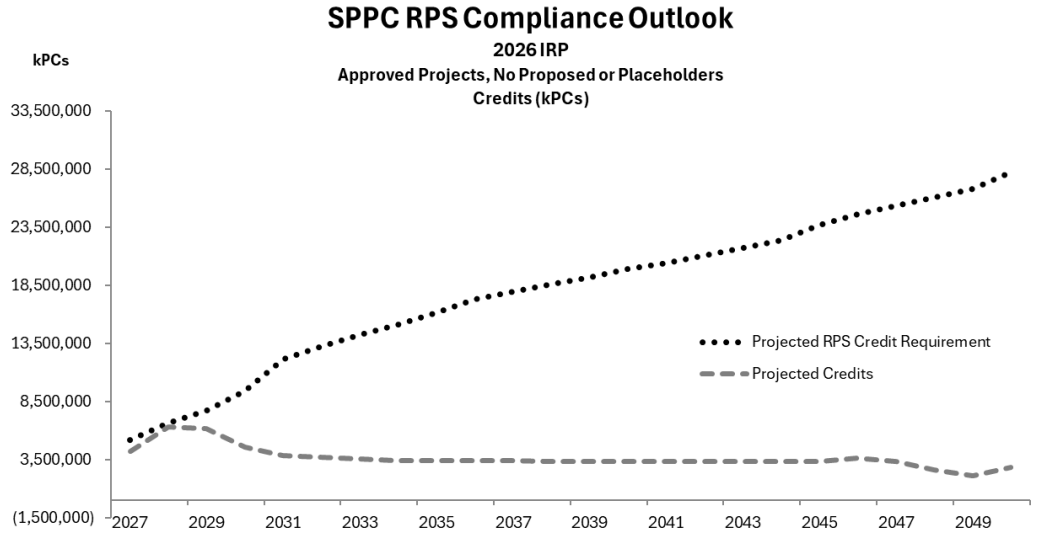

Assuming that no actions to add new renewable or storage resources are taken and no PC sharing occurs, Sierra is projected to be non-compliant starting in 2027.

FIGURE REN-33

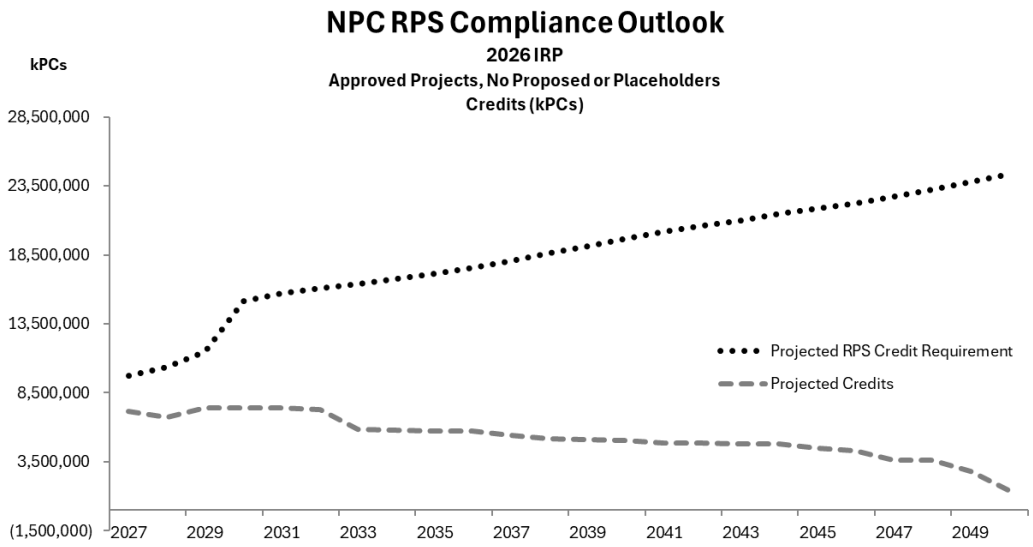

Assuming that no actions to add new renewable or storage resources are taken, Nevada Power is projected to be non-compliant starting in 2027.

The next set of figures shows Nevada Power, Sierra, and the combined Companies' projected compliance under the Obsidian Plan. This plan includes future placeholder resources, including the named placeholders described in Part G above.

FIGURE REN-34

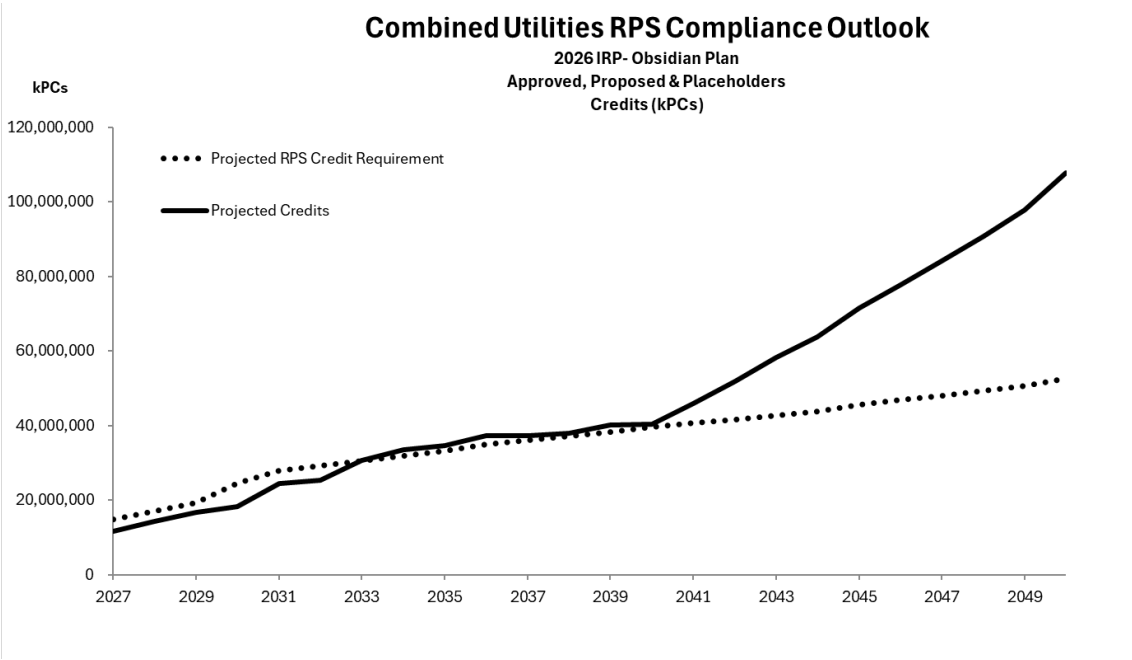

FIGURE REN-35

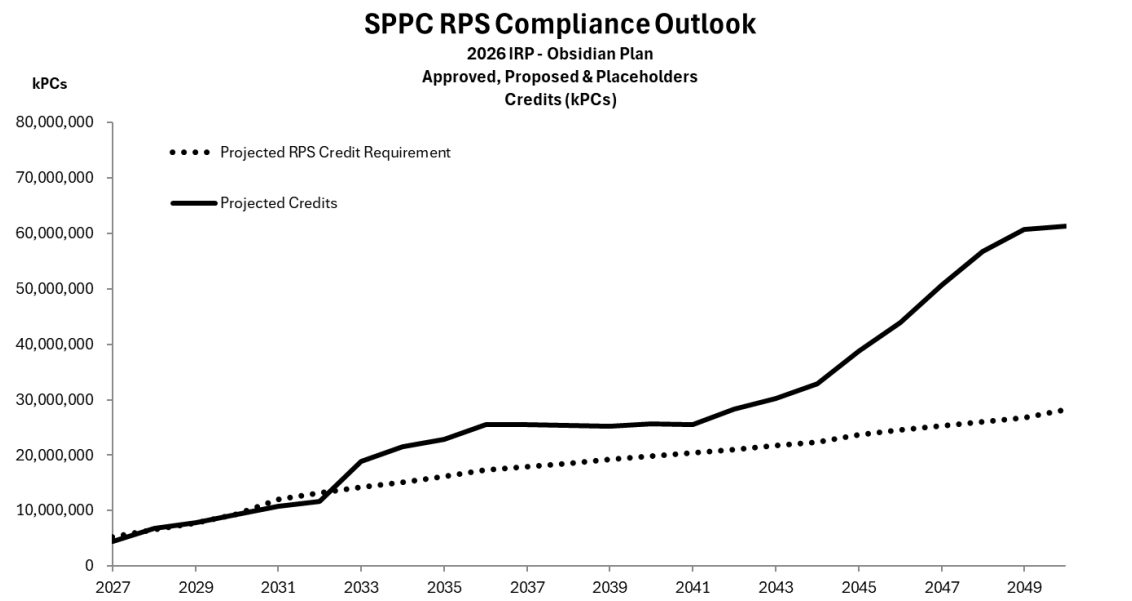

FIGURE REN-36

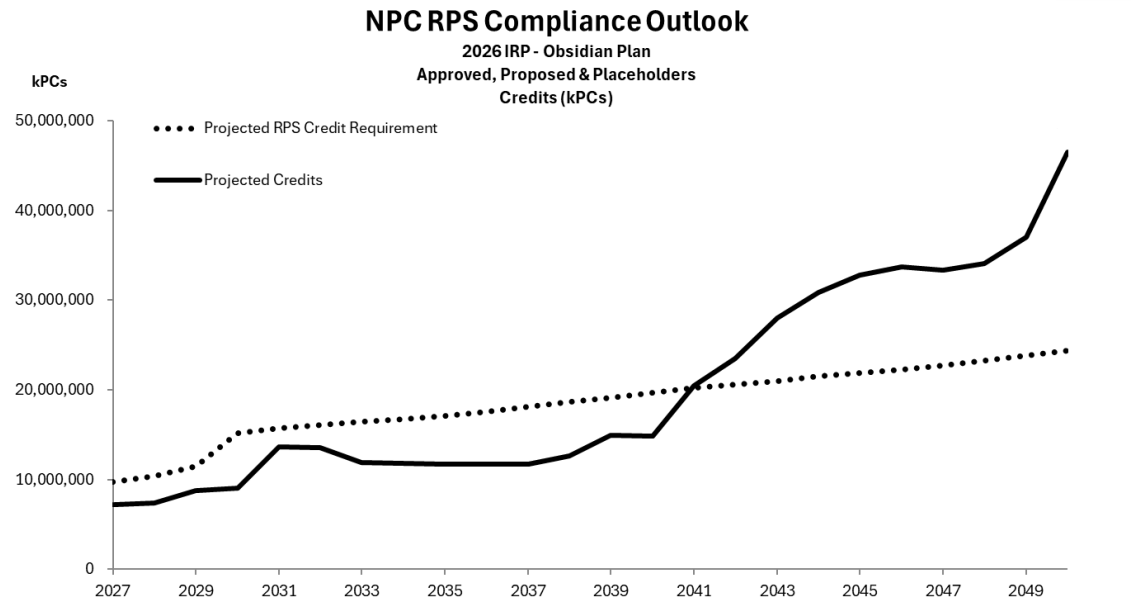

Under the 2026 Joint IRP Obsidian Plan, Sierra is projected to be non-compliant in 2027, return to compliance in 2028 through 2030, become non-compliant in 2031 through 2032, and return to compliance in 2033 through the end of the 24-year study period (2027-2050).[92] Nevada Power is projected to be non-compliant in 2027 through the end of the study period. The Companies combined are projected to be non-compliant in 2027 through 2032. Table REN-4 shows the projected compliance status for each utility and the Companies combined for the period 2027 through 2047. The table also shows the projected surplus/(deficit) for both utilities and for the Companies combined. The Companies will pursue all viable plans including inter-company PC transfer and/or procurement of additional generating resources as needed to avoid a non-compliance outcome.

[92] Resource plan regulations, including NAC § 704.9152 and 704.923, specify a 20-year resource plan period. For this 2026 Joint IRP, the Companies have extended the economic analyses to cover the study period from 2027 to 2050. A 20-year and a 24-year PWRR for relevant cases and plans has been calculated. *See* Economic Analysis for a definition of "study period" (C. Key Modeling Assumptions) and how the economic analysis was conducted.

TABLE REN-4

2026 IRP - Obsidian Plan						
	RPS STATUS			Projected Credit Surplus/(Deficit)		
	NPC	SPPC	NVE	NPC	SPPC	NVE
2027	Non-Compliant	Non-Compliant	Non-Compliant	(2,574,221)	(799,023)	(3,373,244)
2028	Non-Compliant	Compliant	Non-Compliant	(2,958,725)	207,772	(2,750,952)
2029	Non-Compliant	Compliant	Non-Compliant	(2,673,785)	119,297	(2,554,488)
2030	Non-Compliant	Compliant	Non-Compliant	(6,133,384)	816	(6,132,569)
2031	Non-Compliant	Non-Compliant	Non-Compliant	(2,017,168)	(1,267,556)	(3,284,724)
2032	Non-Compliant	Non-Compliant	Non-Compliant	(2,543,474)	(1,520,216)	(4,063,690)
2033	Non-Compliant	Compliant	Compliant	(4,535,585)	4,652,937	117,352
2034	Non-Compliant	Compliant	Compliant	(4,926,142)	6,479,797	1,553,654
2035	Non-Compliant	Compliant	Compliant	(5,379,434)	6,710,359	1,330,925
2036	Non-Compliant	Compliant	Compliant	(5,912,461)	8,276,513	2,364,052
2037	Non-Compliant	Compliant	Compliant	(6,347,982)	7,550,146	1,202,163
2038	Non-Compliant	Compliant	Compliant	(6,026,673)	6,746,752	720,079
2039	Non-Compliant	Compliant	Compliant	(4,208,256)	6,082,117	1,873,861
2040	Non-Compliant	Compliant	Compliant	(4,853,074)	5,797,961	944,887
2041	Compliant	Compliant	Compliant	267,739	5,088,497	5,356,236
2042	Compliant	Compliant	Compliant	2,910,700	7,210,609	10,121,310
2043	Compliant	Compliant	Compliant	7,029,710	8,542,442	15,572,152
2044	Compliant	Compliant	Compliant	9,339,573	10,533,757	19,873,331
2045	Compliant	Compliant	Compliant	10,965,213	15,062,924	26,028,137
2046	Compliant	Compliant	Compliant	11,465,205	19,359,766	30,824,971
2047	Compliant	Compliant	Compliant	10,683,124	25,349,398	36,032,522

*The Projected Credit Surplus/(Deficit) does not include the previous year carry-over

The next set of figures shows Nevada Power, Sierra, and the combined Companies' projected compliance under the Ward Plan. The Ward Plan includes all the Approved and Proposed projects that are included in the Obsidian Plan with the expansion of Thermal Generation units in the placeholder resources. A more detailed analysis is provided in the Economic Analysis.

FIGURE REN-37

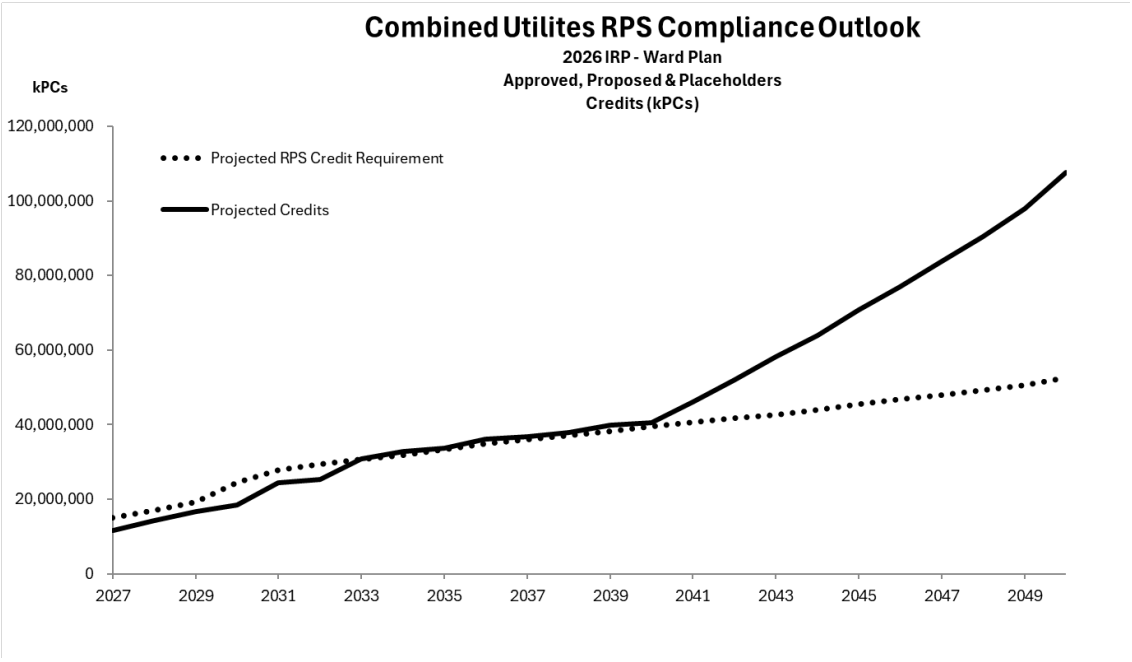

FIGURE REN-38

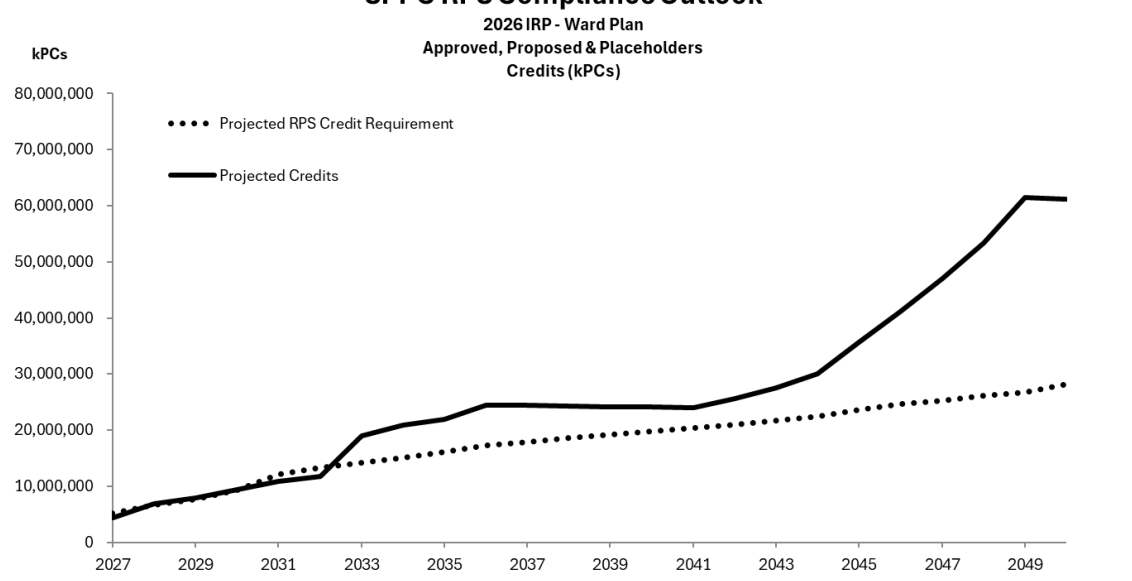

FIGURE REN-39

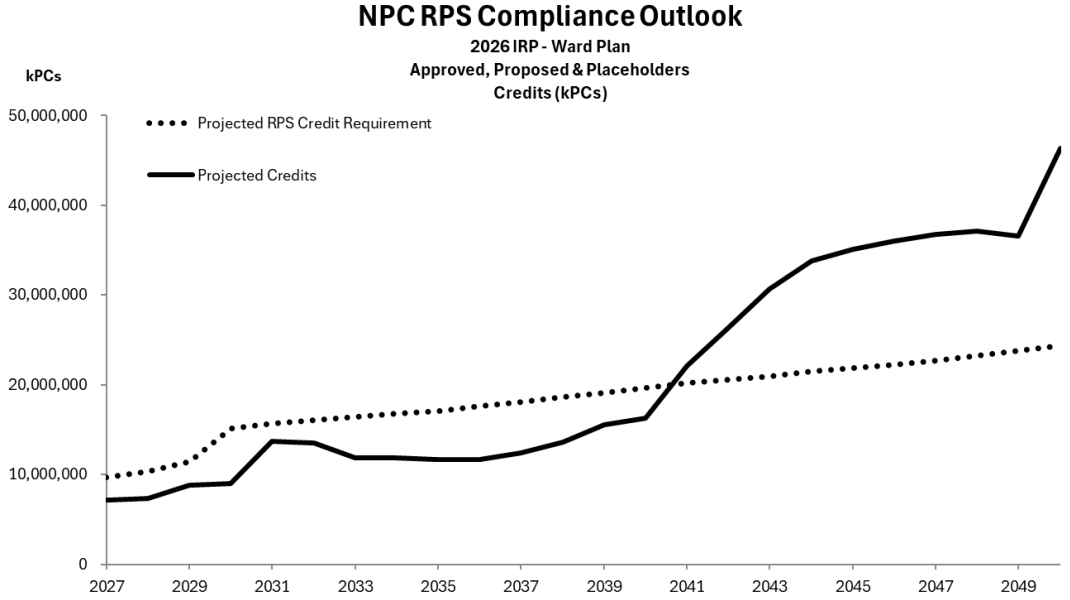

Under the 2026 Joint IRP Ward Plan, Sierra is projected to be non-compliant in 2027, return to compliance in 2028 through 2030, become non-compliant in 2031 through 2032, and return to compliance in 2033 through the end of the study period. Nevada Power is projected to be non-compliant through 2040. The Companies combined are projected to be non-compliant in 2027 through 2032. Table REN-5 below shows the projected compliance status for each utility and the Companies combined for the period 2027 through 2047. The table also shows the projected surplus/(deficit) for both utilities and for the Companies combined.

TABLE REN-5

2026 IRP-Ward Plan						
	RPS STATUS			Projected Credit Surplus/(Deficit)		
	NPC	SPPC	NVE	NPC	SPPC	NVE
2027	Non-Compliant	Non-Compliant	Non-Compliant	(2,574,277)	(799,121)	(3,373,398)
2028	Non-Compliant	Compliant	Non-Compliant	(2,959,386)	206,870	(2,752,516)
2029	Non-Compliant	Compliant	Non-Compliant	(2,674,299)	121,250	(2,553,049)
2030	Non-Compliant	Compliant	Non-Compliant	(6,132,943)	10,319	(6,122,624)
2031	Non-Compliant	Non-Compliant	Non-Compliant	(2,016,803)	(1,281,601)	(3,298,404)
2032	Non-Compliant	Non-Compliant	Non-Compliant	(2,548,542)	(1,541,588)	(4,090,130)
2033	Non-Compliant	Compliant	Compliant	(4,545,491)	4,723,500	178,010
2034	Non-Compliant	Compliant	Compliant	(4,938,918)	5,850,247	911,329
2035	Non-Compliant	Compliant	Compliant	(5,394,721)	5,811,044	416,323
2036	Non-Compliant	Compliant	Compliant	(5,924,507)	7,214,793	1,290,286
2037	Non-Compliant	Compliant	Compliant	(5,657,745)	6,483,632	825,887
2038	Non-Compliant	Compliant	Compliant	(5,022,697)	5,681,413	658,716
2039	Non-Compliant	Compliant	Compliant	(3,554,934)	5,014,732	1,459,798
2040	Non-Compliant	Compliant	Compliant	(3,359,455)	4,336,489	977,035
2041	Compliant	Compliant	Compliant	1,891,707	3,562,107	5,453,814
2042	Compliant	Compliant	Compliant	5,757,200	4,564,736	10,321,937
2043	Compliant	Compliant	Compliant	9,687,730	5,816,863	15,504,593
2044	Compliant	Compliant	Compliant	12,333,211	7,639,655	19,972,866
2045	Compliant	Compliant	Compliant	13,209,870	11,982,647	25,192,517
2046	Compliant	Compliant	Compliant	13,720,267	16,452,510	30,172,777
2047	Compliant	Compliant	Compliant	14,071,021	21,684,735	35,755,757

*The Projected Credit Surplus/(Deficit) does not include the previous year carry-over

The next set of figures shows Nevada Power, Sierra, and the combined Companies' projected compliance under the Wildhorse Plan. The Wildhorse Plan includes all the Approved and Proposed projects that are included in the Obsidian Plan with the expansion of thermal generation units and the placeholder resources. The Wildhorse Plan has fewer thermal generation units than the Ward Plan and is the least-cost option of the three expansion models. A more detailed analysis is provided in the Economic Analysis.

FIGURE REN-40

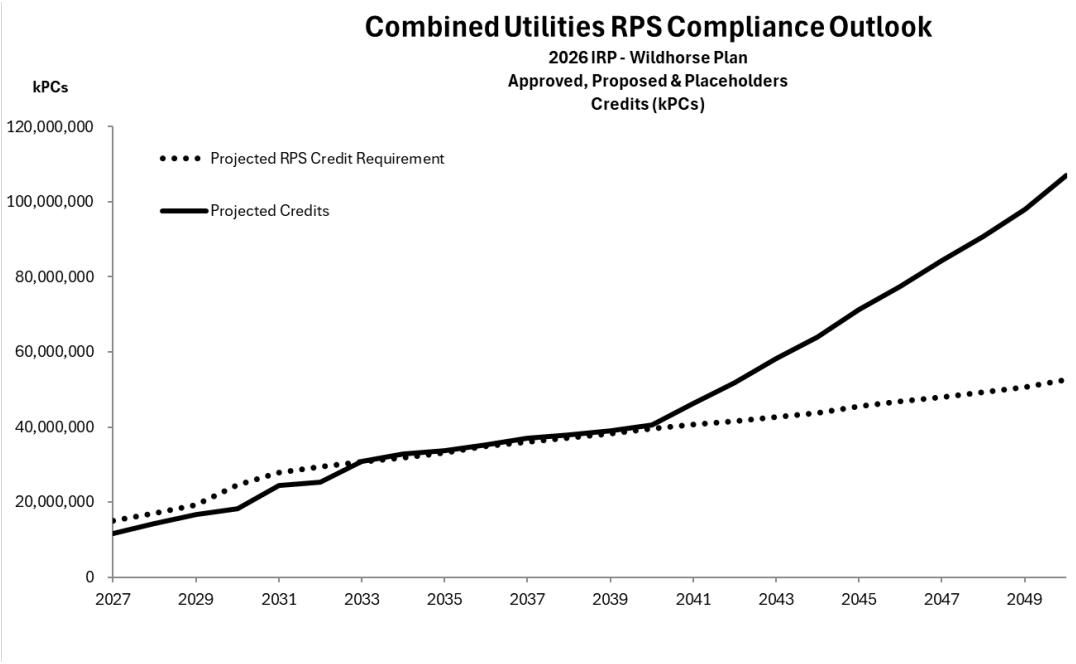

FIGURE REN-41

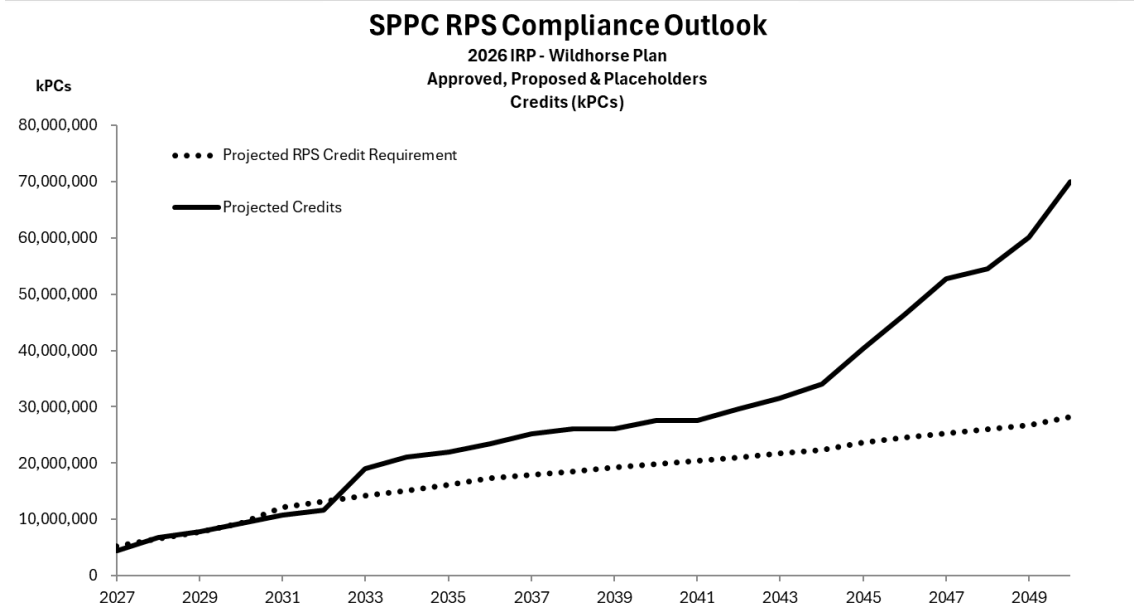

FIGURE REN-42

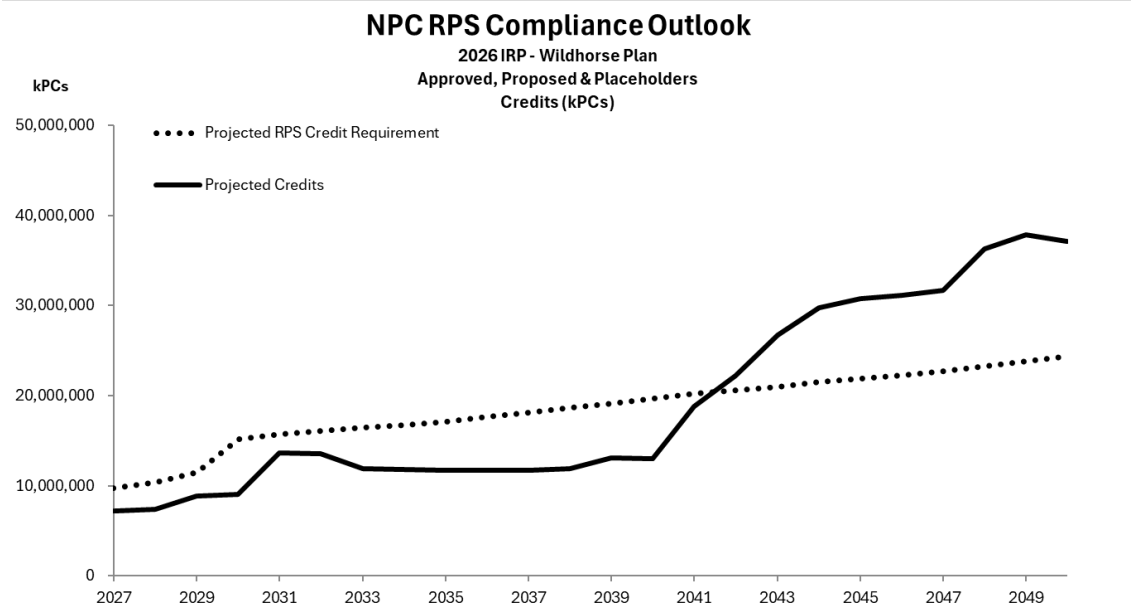

Under the Wildhorse Plan, Sierra is projected to be non-compliant in 2027, return to compliance in 2028 through 2029, become non-compliant in 2030 through 2032, and return to compliance in 2033 through the end of the study period. Nevada Power is projected to remain non-compliant in 2027 through 2041 and return to compliance in 2042 through the end of the study period. The Companies combined are projected to be non-compliant in 2027 through 2032. Table REN-6 below shows the projected compliance status for each utility and the Companies combined for the period 2027 through 2047. The table also shows the projected surplus/(deficit) for both utilities and for the Companies combined.

TABLE REN-6

2026 IRP- Wildhorse Plan						
	RPS STATUS			Projected Credit Surplus/(Deficit)		
	NPC	SPPC	NVE	NPC	SPPC	NVE
2027	Non-Compliant	Non-Compliant	Non-Compliant	(2,574,302)	(799,186)	(3,373,488)
2028	Non-Compliant	Compliant	Non-Compliant	(2,959,279)	208,319	(2,750,960)
2029	Non-Compliant	Compliant	Non-Compliant	(2,673,574)	117,352	(2,556,222)
2030	Non-Compliant	Non-Compliant	Non-Compliant	(6,133,680)	(14,612)	(6,148,292)
2031	Non-Compliant	Non-Compliant	Non-Compliant	(2,032,592)	(1,299,765)	(3,332,357)
2032	Non-Compliant	Non-Compliant	Non-Compliant	(2,558,461)	(1,557,381)	(4,115,842)
2033	Non-Compliant	Compliant	Compliant	(4,549,027)	4,799,013	249,986
2034	Non-Compliant	Compliant	Compliant	(4,951,626)	5,984,318	1,032,692
2035	Non-Compliant	Compliant	Compliant	(5,405,855)	5,876,529	470,673
2036	Non-Compliant	Compliant	Compliant	(5,931,883)	6,215,971	284,088
2037	Non-Compliant	Compliant	Compliant	(6,372,026)	7,277,251	905,225
2038	Non-Compliant	Compliant	Compliant	(6,743,205)	7,494,658	751,453
2039	Non-Compliant	Compliant	Compliant	(6,020,003)	6,832,119	812,116
2040	Non-Compliant	Compliant	Compliant	(6,666,025)	7,716,632	1,050,607
2041	Non-Compliant	Compliant	Compliant	(1,381,728)	7,105,957	5,724,229
2042	Compliant	Compliant	Compliant	1,640,494	8,615,652	10,256,146
2043	Compliant	Compliant	Compliant	5,682,710	9,869,791	15,552,501
2044	Compliant	Compliant	Compliant	8,308,741	11,699,471	20,008,212
2045	Compliant	Compliant	Compliant	8,951,019	16,798,056	25,749,075
2046	Compliant	Compliant	Compliant	8,896,499	21,756,055	30,652,554
2047	Compliant	Compliant	Compliant	8,934,177	27,433,001	36,367,178

*The Projected Credit Surplus/(Deficit) does not include the previous year carry-over

The final set of figures shows Nevada Power, Sierra, and the combined Companies' projected compliance under the Low Carbon and No Open Position Plans.

FIGURE REN-43

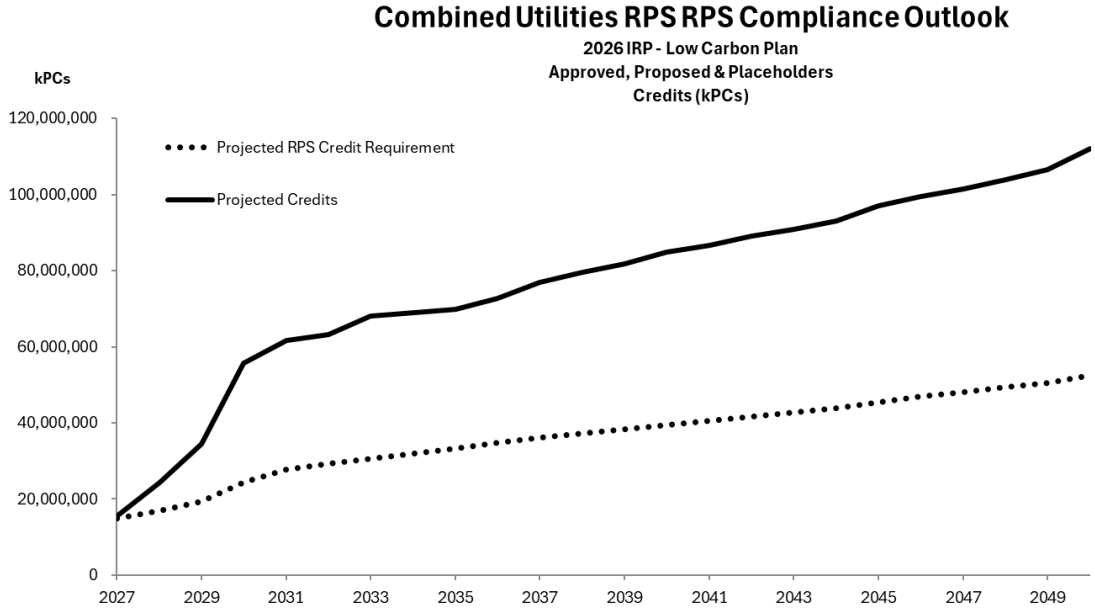

FIGURE REN-44

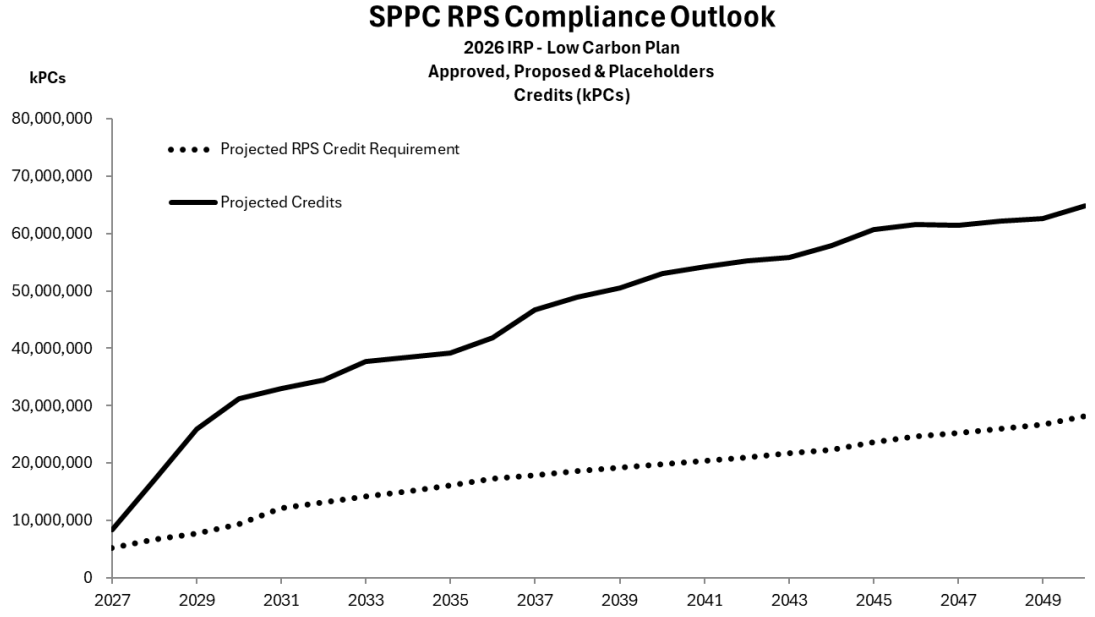

FIGURE REN-45

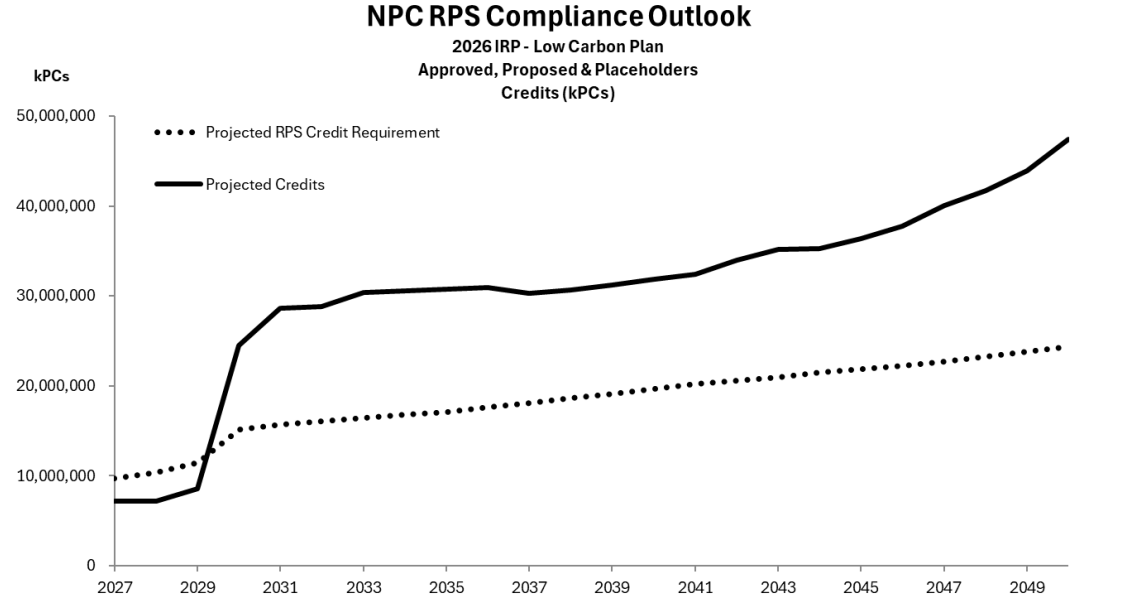

FIGURE REN-46

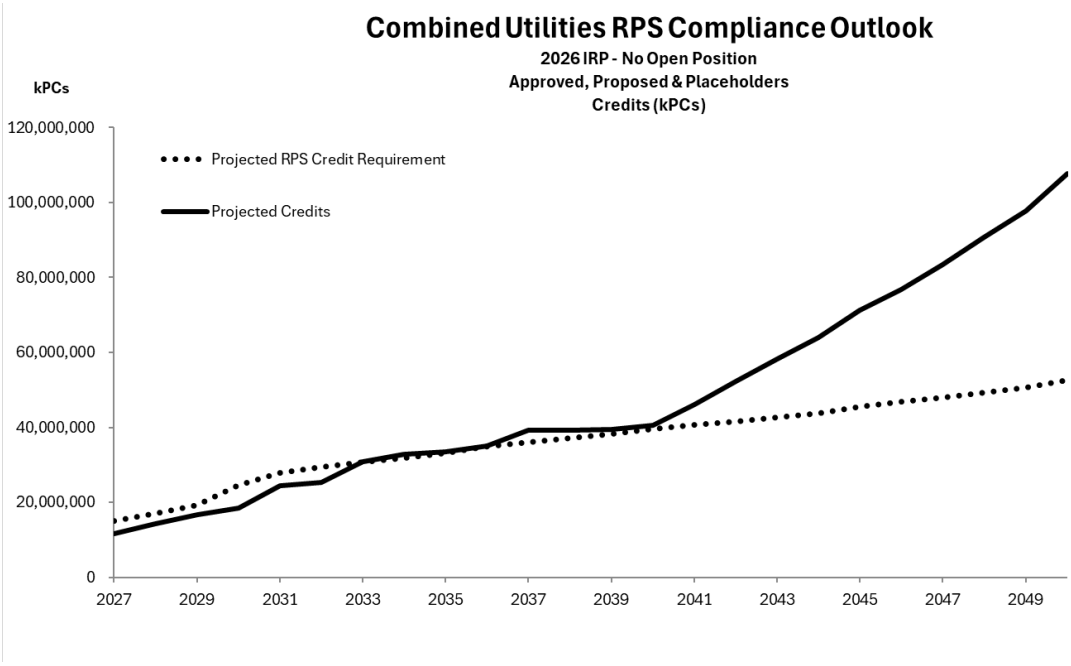

FIGURE REN-47

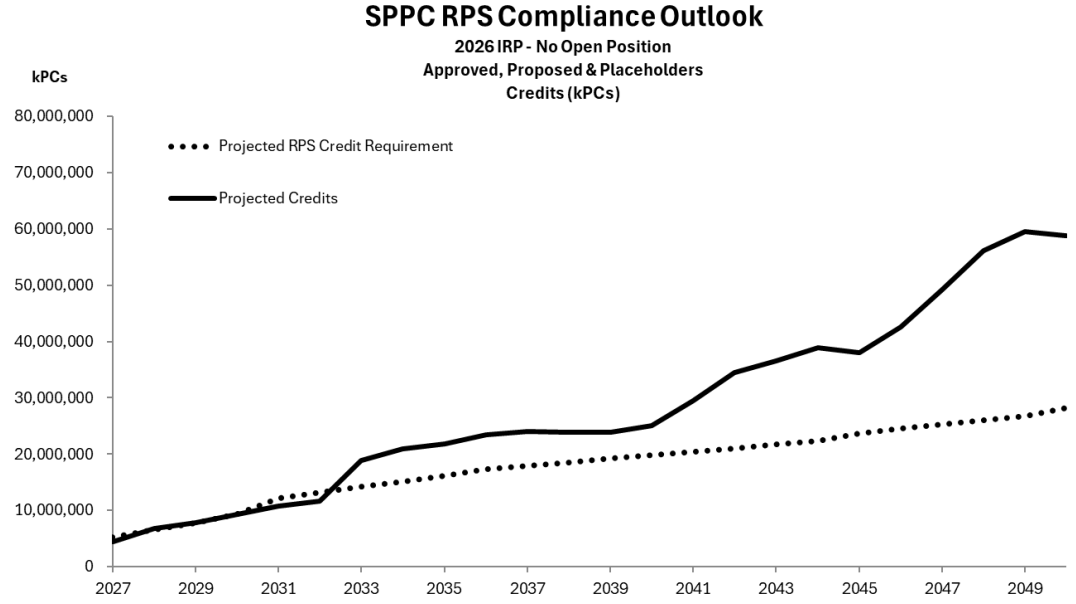

FIGURE REN-48

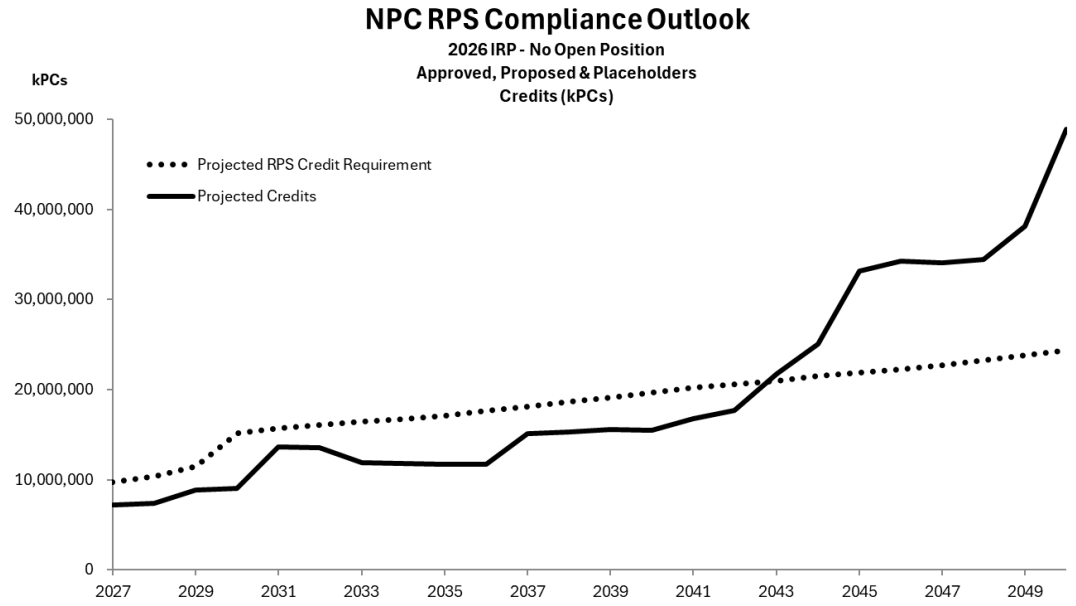

Under the Low Carbon Plan, Sierra is expected to be compliant in 2027 through the end of the study period. Nevada Power is expected to be non-compliant in 2027 through 2029 and compliant in 2030 through the end of the study period. The Companies combined are expected to be

compliant in 2027 through the end of the study period. Under the No Open Position Plan, Sierra is expected to be non-compliant in 2027, compliant in 2028 and 2029, non-compliant in 2030 through 2032, and return to compliance in 2033 through the end of the study period. Nevada Power is projected to be non-compliant in 2027 through 2042 and return to compliance in 2043 through the end of the study period. The Companies combined are expected to be non-compliant in 2027 through 2032 and return to compliance for the remainder of the study period. Table REN-7 and Table REN-8 below shows the projected compliance status for each utility and the Companies combined for the period 2027 through 2047.

TABLE REN-7

2026 IRP- Low Carbon Plan						
	RPS STATUS			**Projected Credit Surplus/(Deficit)***		
	NPC	SPPC	NVE	NPC	SPPC	NVE
2027	Non-Compliant	Compliant	Compliant	(2,593,264)	3,186,511	593,247
2028	Non-Compliant	Compliant	Compliant	(3,115,075)	10,450,301	7,335,226
2029	Non-Compliant	Compliant	Compliant	(2,878,713)	18,214,518	15,335,805
2030	Compliant	Compliant	Compliant	9,311,041	21,805,471	31,116,511
2031	Compliant	Compliant	Compliant	12,960,111	20,872,742	33,832,853
2032	Compliant	Compliant	Compliant	12,760,533	21,158,075	33,918,608
2033	Compliant	Compliant	Compliant	13,924,812	23,531,136	37,455,948
2034	Compliant	Compliant	Compliant	13,809,851	23,328,582	37,138,433
2035	Compliant	Compliant	Compliant	13,618,202	23,089,038	36,707,240
2036	Compliant	Compliant	Compliant	13,302,569	24,519,695	37,822,264
2037	Compliant	Compliant	Compliant	12,229,763	28,713,008	40,942,770
2038	Compliant	Compliant	Compliant	12,000,940	30,285,312	42,286,252
2039	Compliant	Compliant	Compliant	12,089,893	31,364,937	43,454,830
2040	Compliant	Compliant	Compliant	12,156,222	33,101,005	45,257,227
2041	Compliant	Compliant	Compliant	12,230,018	33,797,745	46,027,763
2042	Compliant	Compliant	Compliant	13,342,590	34,155,393	47,497,983
2043	Compliant	Compliant	Compliant	14,142,534	34,073,044	48,215,578
2044	Compliant	Compliant	Compliant	13,790,999	35,459,925	49,250,924
2045	Compliant	Compliant	Compliant	14,518,156	37,016,463	51,534,618
2046	Compliant	Compliant	Compliant	15,467,638	37,031,462	52,499,101
2047	Compliant	Compliant	Compliant	17,365,381	36,158,873	53,524,254

*The Projected Credit Surplus/(Deficity) does not include the previous year carry-over

TABLE REN-8

2026 IRP- No Open Position						
	RPS STATUS			Projected Credit Surplus/(Deficit)*		
	NPC	SPPC	NVE	NPC	SPPC	NVE
2027	Non-Compliant	Non-Compliant	Non-Compliant	(2,574,222)	(798,994)	(3,373,216)
2028	Non-Compliant	Compliant	Non-Compliant	(2,959,088)	206,735	(2,752,354)
2029	Non-Compliant	Compliant	Non-Compliant	(2,673,343)	121,004	(2,552,339)
2030	Non-Compliant	Non-Compliant	Non-Compliant	(6,135,154)	(7,903)	(6,143,057)
2031	Non-Compliant	Non-Compliant	Non-Compliant	(2,028,971)	(1,301,384)	(3,330,355)
2032	Non-Compliant	Non-Compliant	Non-Compliant	(2,554,950)	(1,552,539)	(4,107,489)
2033	Non-Compliant	Compliant	Compliant	(4,547,147)	4,699,606	152,459
2034	Non-Compliant	Compliant	Compliant	(4,944,379)	5,831,065	886,686
2035	Non-Compliant	Compliant	Compliant	(5,401,075)	5,745,235	344,160
2036	Non-Compliant	Compliant	Compliant	(5,925,163)	6,113,599	188,436
2037	Non-Compliant	Compliant	Compliant	(2,969,879)	6,100,186	3,130,307
2038	Non-Compliant	Compliant	Compliant	(3,333,752)	5,311,839	1,978,087
2039	Non-Compliant	Compliant	Compliant	(3,560,577)	4,655,212	1,094,635
2040	Non-Compliant	Compliant	Compliant	(4,205,199)	5,187,957	982,757
2041	Non-Compliant	Compliant	Compliant	(3,460,656)	9,003,546	5,542,890
2042	Non-Compliant	Compliant	Compliant	(2,902,602)	13,451,994	10,549,392
2043	Compliant	Compliant	Compliant	708,531	14,810,086	15,518,617
2044	Compliant	Compliant	Compliant	3,548,418	16,505,953	20,054,371
2045	Compliant	Compliant	Compliant	11,344,742	14,351,675	25,696,417
2046	Compliant	Compliant	Compliant	11,960,291	17,963,888	29,924,179
2047	Compliant	Compliant	Compliant	11,341,192	23,973,033	35,314,226

*The Projected Credit Surplus/(Deficit) does not include the previous year carry-over

Compliance Outlook

NEVADA POWER

With the approval of the proposed projects in this filing, Nevada Power's RPS compliance outlook is forecasted to be non-compliant in 2027 through the end of the study period. For several reasons, this Nevada Power RPS compliance outlook is different from those stated in the 2024 Joint IRP and the Portfolio Standard Annual Report for Compliance Year 2025 filed on April 15, 2026, in Docket No. 26-04023. First, the projected high retail load growth[93] coupled with the large RPS compliance tier increase in 2027 to 42 percent,[94] magnify the goal and compound the challenge to

[93] For the 2026 Joint IRP's three-year Action Plan period (2027 through 2029), the CAGR of the annual retail energy for the Companies is 11.3 percent (7.4 percent at Nevada Power and 17.6 percent at Sierra). High retail load growth is also projected for the 20-year period. See the Load Forecast Section within the Load Forecast, Market Fundamentals, Fuel and Purchase Power Price Forecasts Narrative in this 2026 Joint IRP filing, for load forecasting explanations.
[94] The statutory RPS compliance tier increases from 34 percent for the period 2024-2026 to 42 percent for the period 2027-2029 and then to 50 percent for 2030 and each year thereafter. See NRS § 704.7821.

meet RPS compliance.[95] Referring to Table REN-10 below, Nevada Power's current retail load outlook in this IRP filing is higher than that of the previously approved plan from the 2024 Joint IRP and in the year when the RPS increases to 42 percent. Because the RPS credit requirement is tied directly to retail sales, the combined change increases Nevada Power's forecasted RPS credit requirement. Second, the limited available land for development, multiyear project permitting timelines, and lack of available transmission capacity are key constraints in the renewable project pipeline. Third, the completion of costly requisite network upgrades, procurement of long-lead critical equipment, such as breakers and transformers, as well as project permit issuance and transmission interconnectivity capability, are interdependent project milestones that are subject to various independent external forces, exogenous to the project, that may not be knowable or cannot be easily mitigated, even with diligent planning. For example, the Boulder Solar III project approved in Docket No. 24-05041 has experienced challenges in its development due to increased costs, driven primarily by external factors and permitting delays. The developer missed a critical project milestone and subsequently, on March 20, 2026, terminated the PPA. Table REN-9 below shows the PCs Nevada Power has recently lost due to canceled PPAs.

TABLE REN-9
NEVADA POWER LOST PROJECTS, LOST GENERATIONS

Lost Projects, Lost Generation

Projects [a.]	Docket No.	Original COD	Date Terminated	MW AC
Iron Point (56% NPC)	21-06001	12/31/2023	6/22/2023	250
Hot Pot (56% NPC)	21-06001	12/31/2024	6/22/2023	350
Southern Bighorn (60% NPC)	19-06039	9/1/2023	11/13/2023	300
Chuckwalla	20-07023	12/1/2023	11/17/2023	200
Boulder Solar III	20-07023	12/31/2023	4/29/2024	128
Boulder Solar III	24-05041	6/1/2027	3/20/2026	128
				2,411

Table Notes:
a. The energy/credits of the project as allocated between Nevada Power and Sierra per the order.

SIERRA

With the approval of the proposed projects in this filing, Sierra is projected to be non-compliant in 2027, return to compliance in 2028 through 2030, become non-compliant in 2031 through 2032, and return to compliance in 2033 through the end of the 24-year study period (2027-2050). Compliance in 2028 and 2029 is partly attributable to accounting for the output from Libra in

[95] Because Nevada's RPS is calculated as a percentage of total retail sales, projected retail load growth increases the absolute quantity of qualifying portfolio energy needed for compliance.

Sierra's outlook as opposed to Nevada Power's outlook.[96] This is different from the 2024 IRP's outlook in Docket No. 24-05041 as well as the Portfolio Standard Annual Report for Compliance Year 2025 filed on April 15, 2026, in Docket No. 26-04023, for several reasons. First, the projected high retail load growth coupled with the large RPS compliance tier increase in 2027 to 42 percent, magnify the goal and compound the challenge to meet RPS compliance.[97] Referring to Table REN-10 below, under the current load forecast, Sierra's current retail load outlook is higher than that of the previously approved plan from the 2024 Joint IRP and in the year when the RPS increases to 42 percent. Because the RPS credit requirement is tied directly to retail sales, the combined change increases Sierra's forecasted RPS credit requirement. Included in the increased forecast of Sierra's load is the planned extension of the Liberty contract through December 31, 2027, which also provides PCs to the utility.[98] Finally, the Sierra's Utility Owned Community Solar ("UOCS") and Solar for All ("S4A") projects proposed in Docket No. 24-05041 were not approved, resulting in the loss of a planned 6,312 PCs.

TABLE REN-10
RPS CURRENT FORECAST

	Sierra (MW hours)			NPC (MW hours)		
	2024 IRP 1st Amendment*	2026 IRP	Difference	2024 IRP 1st Amendment*	2026 IRP	Difference
2026	12,010,964	10,518,365	-12.43%	22,237,202	22,324,526	0.39%
2027	12,843,346	13,307,060	3.61%	22,237,202	24,363,756	9.56%
2028	13,988,213	16,743,503	19.70%	22,516,659	25,921,375	15.12%
2029	15,022,507	19,529,588	30.00%	22,875,648	28,127,361	22.96%
2030	16,788,241	22,203,847	32.26%	23,166,115	30,637,482	32.25%

	Increase/ (Decrease)	RPS%	Credit Impact	Increase/ (Decrease)	RPS%	Credit Impact
2026	-1,492,599	34%	(507,484)	87,324	34%	29,690
2027	463,714	42%	194,760	2,126,554	42%	893,153
2028	2,755,290	42%	1,157,222	3,404,716	42%	1,429,981
2029	4,507,081	42%	1,892,974	5,251,713	42%	2,205,719
2030	5,415,606	50%	2,707,803	7,471,367	50%	3,735,684

*Docket No. 25-10028

[96] Approximately two percent of Libra's PCs were assumed to be allocated to a customer pursuant to a customer agreement, and the balance was assumed to be allocated to Sierra.
[97] *See supra* notes 99-101.
[98] On December 29, 2025, Sierra and Liberty Utilities executed the Third Amended and Restated Service Agreement that requires Sierra to provide Liberty Utilities with renewable energy credits to equal to twenty-four percent of the annual energy delivered each year for the remainder of the term.

Second, Sierra's RPS compliance challenges are also a result of PPA cancellations by developers. Table REN-11 below shows the PCs Sierra has recently lost due to canceled PPAs. As discussed in the First Amendment to the 2024 Joint IRP,[99] Ormat has provided notice to the Companies that two of its portfolio PPAs, North Valley 2 and Gerlach, have been cancelled, and the Lone Mountain PPA COD has been delayed from January 2026 to October 2028. Additionally, Liberty has notified the Companies that it has placed its Luning Expansion Project[100] on hold indefinitely, which would have provided Liberty with PCs and therefore reduced Sierra's PC transfer obligation to Liberty under the requirements of the service agreement associated with Liberty's Luning Expansion Project. The energy and credits from the various facilities were to be assigned to Sierra as described above and in Table REN-11; thus, the cancellation of those PPAs impacts Sierra's RPS compliance and capacity. While every PPA is entered into with the expectation of success, events can and do happen that make once-viable PPAs unviable. Similar to the external forces impacting Nevada Power's PPA projects explained above, Sierra's PPA projects are also subject to various independent external forces, exogenous to the project, that may not be knowable or cannot be easily mitigated, even with diligent planning. The primary driver for the latest wave of cancelations was cost. Supply chain disruptions, fluctuating tariffs, and related increases in component and labor costs made the PPAs too costly to move forward.

[99] Docket No. 25-10028, Volume 1 at 55 and 56 of 259.
[100] Liberty Utilities has notified the Companies that the Luning Expansion Project, that was under development by Liberty Utilities as a 60-MW solar and 240-MW storage project intended to reach commercial operation in the fourth quarter of 2023, has been delayed indefinitely.

TABLE REN-11
SIERRA LOST PROJECTS, LOST GENERATION

Lost Projects, Lost Generation

Projects [a.]	Docket No.	Original COD	Date Terminated	MW AC
Iron Point (44% SPPC)	21-06001	12/31/2023	6/22/2023	250
Hot Pot (44% SPPC)	21-06001	12/1/2024	6/22/2023	350
Southern Bighorn (40% SPPC)	19-06039	9/1/2023	11/13/2023	300
North Valmy Eavor Loop	22-11032	12/31/2026	6/22/2024	20
North Valley II (OWGP)	22-11032	1/1/2026	4/25/2025	15
Gerlach (OWGP)	22-11032	1/1/2028	4/25/2025	15
Lone Mountain (OWGP)[b.]	22-11032	1/1/2026	04/29/25 [b.]	15
				965

Table Notes:
a. The energy/credits of the projects as allocated between Nevada Power and Sierra per the order

b. The Lone Mountain project has been delayed until 10/01/2028, not cancelled. The date shown reflects when NV Energy was notified of the delay. The Companies are still in discussions with the counterparty to explore all remedial options.

Third, Sierra's compliance outlook is challenged by transmission constraints for Sierra. Currently there is limited ability to move energy from generation to load in Sierra's service territory in the near term, requiring completion of contingent facilities and significant additional transmission infrastructure to remedy. The completion of Greenlink West and Greenlink North will allow for a significant addition of renewable energy capacity in Sierra's territory when it goes into service.

To mitigate risks resulting in RPS non-compliance, Nevada Power and Sierra will continue to explore near-term options, including evaluating available proposals received from renewable energy RFPs, self-developing projects, discussions with counterparties to amend existing PPAs to facilitate acquisition of additional PCs, conducting bilateral asset purchase and other commercial transactions and exploring short-term purchase agreements that benefit customers, so that it can procure the renewable generation and BESS resources needed to continue meeting their RPS requirements.

Nevada Power and Sierra will continue to closely monitor their RPS compliance outlooks, recognizing that there are many factors, some outside of the Companies' control or exogenous to the projects, which will ultimately determine whether the Companies will have a sufficient number of PCs to satisfy their respective RPS credit obligations.

H. Renewable Energy Plan Overview

Nevada is fortunate to have significant renewable resources throughout the state, including some of the greatest solar and geothermal generation potential in the country. The Companies' efforts to incorporate renewable energy into their generating fleet have grown substantially over the past decade, and the Companies have built a diverse and robust portfolio of renewable projects.

In their most recent annual RPS compliance filing, Docket No. 26-04023, Nevada Power and Sierra both exceeded their respective 2025 RPS credit requirements of 34 percent. Nevada Power ended 2025 at 44.6 percent and Sierra at 54.7 percent. The Companies have been continuously compliant with RPS requirements every year since 2010.

As of April 30, 2026, Nevada Power had approximately 2,723 MW of contracted and 165 MW of owned renewable generating resources operating and delivering renewable energy to meet the energy needs of its customers. In addition, Nevada Power ended March 2026 with the following three solar PV and BESS projects under development: Sierra Solar, Dry Lake East, and Libra – pending final allocation of the Libra project between Nevada Power and Sierra. Sierra had approximately 945 MW of renewable contracted generating resources and approximately 20 MW of Company-owned generating resources operating and delivering renewable energy to meet the energy needs of its customers. In addition to the aforementioned Sierra Solar PV and BESS project, Sierra ended March 2026 with seven geothermal projects in various stages of development.

The following is a summary of Nevada Power's and Sierra's portfolios of renewable facilities that contributed to Nevada Power and Sierra meeting the RPS requirements as of March 31, 2026, which includes many resources also depicted in the Long-Term Power Purchase Agreements Section of the Supply Plan.[101] The list below does not include the community-based solar projects, short-term agreements, Nevada Power's allocation of Hoover, or projects that are dedicated to supporting commitments to meet customer-specific requirements for renewable energy under a Commission-approved NGR Option 2 tariff.[102] The Companies made a separate compliance filing required by Schedule No. NGR in Docket No. 25-03025.

Nevada Power

1. Desert Peak 2 Geothermal Power

[101] *See* Figure CON-1 and Figure CON-2 in the Long-Term Power Purchase Agreements Section of the Supply Plan.
[102] Nevada Power entered into a short-term purchase agreement with Tonopah Solar Energy for the output of the Crescent Dunes Solar Thermal Plant for the period December 21, 2021, through September 30, 2024, which is not expected to impact the Companies' RPS compliance outlook. The contribution of the community based solar resources (i.e., Mojave Solar, Freedom Park Solar and Moana Solar) to the RPS compliance outlook is negligible. Facilities entirely dedicated to NGR customers are Boulder Solar II, Fort Churchill Solar, Switch Station 1, Switch Station 2, Techren Solar 2 and Turquoise Nevada.

The Desert Peak 2 facility is a 25 MW geothermal project located in Churchill County, Nevada. The project was approved by the Commission in 2003. The plant began producing energy in 2007 and the PPA terminates on December 31, 2027.

2. Faulkner 1
   Faulkner 1, a/k/a NGP Blue Mountain, is a 49.5 MW geothermal project located in Humboldt County near Blue Mountain, Nevada. The project was approved by the Commission in 2007. The plant began producing energy in 2009 and the PPA terminates on December 31, 2029.

3. Jersey Valley Geothermal Project
   The Jersey Valley facility is a 22.5 MW geothermal project located in a remote area between Lander and Pershing counties in Nevada. The project was approved by the Commission in 2007. The plant began producing energy in 2011 and the PPA terminates on December 31, 2031.

4. McGinness Hills Geothermal Project
   The McGinness Hills facility is a 96 MW geothermal project located in Lander County, Nevada. The project was approved by the Commission in 2010. The plant began producing energy in 2012. As part of the existing 20-year PPA between Nevada Power and ORNI 39, LLC (owned by Ormat Technologies), the McGinness Hills geothermal facility was expanded to include a second 48 MW geothermal unit (included in 96 MW total). The second unit declared contractual commercial operation on February 4, 2015. The Commission approved the expansion on December 23, 2013 (Docket No. 13-11007). The PPA terminates on December 31, 2032.

5. Salt Wells Geothermal Plant
   The Salt Wells facility is a 23.6 MW geothermal project located in Churchill County east of Fallon, Nevada. The project was approved by the Commission in 2007. The plant began producing energy in 2009. The PPA terminates on December 31, 2029.

6. Stillwater 2 Geothermal Plant
   The Stillwater 2 facility, a/k/a Stillwater Geothermal, is a 47.2 MW geothermal project located in Churchill County, Nevada. The project was approved by the Commission in 2007. The plant began producing energy in 2009. The PPA terminates on December 31, 2029.

7. Tuscarora Geothermal Plant
   The Tuscarora facility is a 32 MW geothermal project located in Elko County, Nevada. The capacity of the facility was expanded from 25 MW to 32 MW in Docket No. 12-06053,

and the PPA was amended to allow for further capacity increases to up to 50 MW. The plant began producing energy in 2012. The PPA terminates on December 31, 2032.

8. ACE Searchlight Solar
   ACE Searchlight, now Searchlight Solar, is a 17.5 MW solar PV project near Searchlight, Nevada. The project was approved by the Commission in 2009. The solar farm began producing energy in 2014. The PPA terminates on December 31, 2034.

9. RV Apex
   RV Apex Solar facility is a 20 MW solar PV project located in Clark County north of Las Vegas, Nevada. The project was approved by the Commission in 2009. The solar facility began producing energy in 2012. The PPA terminates on December 31, 2037.

10. Boulder Solar I
    Boulder Solar I is a 100 MW solar PV project located in Boulder City, Nevada. The project was approved by the Commission in 2015. The solar project declared commercial operation in December 2016. The 20-year PPA terminates on December 31, 2036.

11. Las Vegas Valley Water District ("LVVWD")
    The LVVWD project, a/k/a SunPower, is comprised of six Las Vegas-area small PV arrays collectively totaling 3 MW. The project was approved by the Commission in 2006. These installations began producing electricity in 2006 and 2007. LVVWD provides PCs only to Nevada Power. The agreement terminates on December 31, 2026.

12. Mountain View Solar
    The Mountain View solar facility is a 20 MW solar PV plant located north of Las Vegas in Clark County, Nevada. The project was approved by the Commission in 2012. The solar project began producing energy in 2014. The PPA terminates on December 31, 2039.

13. Nellis Air Force Base ("AFB"), Solar Star
    The Nellis AFB Solar Star project, a/k/a Nellis I, is a 13.2 MW solar PV project that produces energy for Nellis Air Force Base, located north of Las Vegas, Nevada. The project was approved by the Commission in 2007. The array began producing electricity in 2007, since then Nellis AFB sells only PCs to Nevada Power. The agreement terminates on December 31, 2027.

14. Nellis Solar Array II

Nellis Solar Array II is a 15 MW (nameplate AC) solar PV project located on Nellis AFB in Las Vegas, Nevada. The project was approved by the Commission in Docket No. 14-05003. The solar array began producing energy in 2015. The project is owned by Nevada Power.

15. Nevada Solar One

Nevada Solar One is a 69 MW concentrated solar thermal plant that is located in the Eldorado Valley near Boulder City, Nevada. Approximately 46.9 MW of the capacity and generation is contracted to Nevada Power. The balance of the capacity and generation is contracted to Sierra. The project was approved by the Commission in 2003. The solar thermal plant began producing energy in 2007 and the PPA terminates on December 31, 2027.

16. Silver State Solar

The Silver State Solar facility is a 52 MW solar PV project located in Clark County near Primm, Nevada. The project was approved by the Commission in 2010. The solar project began producing energy in 2012. The PPA terminates on December 31, 2037.

17. FRV Spectrum Solar

The FRV Spectrum facility is a 30 MW solar PV plant located north of Las Vegas in Clark County, Nevada. The project was approved by the Commission in 2012. The solar array began producing energy in 2013. The PPA terminates on December 31, 2038.

18. Stillwater 2 Solar

The Stillwater 2 Solar facility, a/k/a Stillwater PV, is a 22 MW solar PV project located in Churchill County, Nevada. The project was approved by the Commission in 2011. The solar array began producing energy in 2012. The PPA terminates on December 31, 2029.

19. Eagle Shadow Mountain Solar Farm

Eagle Shadow Mountain Solar Farm is a 300 MW solar PV facility located on the Moapa River Indian Reservation north of Las Vegas, Nevada. The solar array is online, capable of generating approximately 265 MW and declared commercial operations on May 10, 2023. The project was approved by the Commission in Docket No. 18-06003. The PPA is for 25 years.

20. Copper Mountain Solar 5

Copper Mountain Solar 5 is a 250 MW solar PV facility located in Boulder City, Nevada. The solar array declared commercial operations on July 23, 2021. The project was approved by the Commission in Docket No. 18-06003. The PPA is for 25 years.

21. Arrow Canyon Solar

Arrow Canyon Solar, formerly known as Moapa Solar, is a 200 MW solar PV facility with 75 MW of BESS capacity that is located on the Moapa River Indian Reservation north of Las Vegas, Nevada. The project, including the BESS, achieved commercial operation on December 8, 2023. The energy, capacity and PCs generated by the facility will be split 70 percent to Sierra, 30 percent to Nevada Power. The 25-year PPA was approved by the Commission in Docket No. 19-06039.

22. Gemini Solar

Gemini Solar is a 690 MW solar PV facility with 380 MW of BESS capacity that is located in Clark County, approximately 25 miles northeast of Las Vegas, Nevada. The project declared commercial operation on March 25, 2024. While 100 percent of the energy and capacity generated by the facility will go to Nevada Power, only 60 percent of the associated PCs will be assigned to Nevada Power, with the balance assigned to Sierra. The 25-year PPA was approved by the Commission in Docket No. 19-06039.

23. Techren Solar I

Techren Solar I is a 100 MW solar PV facility located in Boulder City, Nevada. The solar array declared commercial operations on March 11, 2019. The project was approved by the Commission in Docket No. 16-08026. The PPA is for 25 years.

24. Techren Solar III

Techren Solar III is a 25 MW solar PV facility located in Boulder City, Nevada. The solar array achieved commercial operation on October 7, 2020. The project was approved by the Commission in Docket No. 17-11004. The PPA is for 25 years.

25. Techren Solar V

Techren Solar V is a 50 MW solar PV facility located in Boulder City, Nevada. The solar farm achieved commercial operation on December 31, 2020. The project was approved by the Commission in Docket No. 18-06003. The PPA is for 25 years.

26. Spring Valley Wind

The Spring Valley Wind facility is a 151.8 MW wind project located in Spring Valley near Ely, Nevada. The project was approved by the Commission in 2010. The wind farm began delivering energy in 2012. The PPA terminates on December 31, 2032.

27. Apex Landfill Facility

The Apex Landfill facility is a 12 MW landfill gas-to-energy project located in Clark County, Nevada. The project was approved by the Commission in 2009. The plant began producing energy in 2012. The PPA terminates on December 31, 2032.

28. Lockwood Renewable Energy Facility
The Lockwood facility, a/k/a WM Renewable Energy-Lockwood, is a 3.2 MW landfill gas-to-energy project located at the Lockwood Landfill near Reno, Nevada. The project was approved by the Commission in 2010. The plant began producing energy in 2012. The PPA terminates on December 31, 2032.

29. Goodsprings Recovered Energy Generation Station
The Goodsprings Recovered Energy Generation Station is located 35 miles south of Las Vegas, Nevada. It is a 5 MW generating plant that converts waste heat from a natural gas pipeline compressor station to electric energy. The project was approved by the Commission in 2008 and it started producing energy in 2010. The project is owned by Nevada Power.

30. Dry Lake Solar
The Dry Lake Solar project is 150 MW solar PV facility with 100 MW of BESS capacity located 20 miles northeast of Las Vegas adjacent to the Harry Allen combined cycle station and is owned by Nevada Power. The project declared commercial operations on May 2, 2024. The 25-year pricing was approved by the Commission in Docket No. 20-07023.

Sierra

1. Beowawe Geothermal Power Plant
The Beowawe facility, a/k/a OWGP Beowawe, is a 20 MW geothermal facility located in Eureka County and is owned by Terra-Gen Power. The plant was placed into service in 1985 and was originally under contract with Southern California Edison. However, in 2006, Sierra entered into a contract for renewable energy that expires on December 31, 2024. Beowawe is included in Ormat's geothermal portfolio that was approved in Docket No. 22-11032 with an expiration date of December 31, 2053.

2. Burdette Geothermal Power Plant
The Burdette facility is a 26 MW geothermal project located in Washoe County near Steamboat, Nevada. The plant went into service in 2006. Sierra has a 20-year PPA with the facility that expires on December 31, 2026. Burdette is also included in Ormat's geothermal portfolio that was approved in Docket No. 22-11032 with an expiration date of December 31, 2053.

3. Galena 3 Geothermal Power Plant
The Galena 3 facility is a 26.5 MW geothermal project located in Washoe County south of Reno near Steamboat, Nevada. The plant went into service in 2008. Sierra has a 20-year PPA with the facility that expires on December 31, 2028. Galena 3 is also included in

Ormat's geothermal portfolio that was approved in Docket No. 22-11032 with an expiration date of December 31, 2053.

4. North Valley Geothermal
North Valley Geothermal is a 25 MW geothermal plant located in the San Emidio Desert in Washoe County, Nevada. Sierra has a 25-year PPA with Ormat to purchase the energy and associated portfolio energy credits generated by the plant. The PPA was approved by the Commission in Docket 22-03024. The plant achieved commercial operation on April 26, 2023.

5. USG San Emidio Geothermal Power Plant
The USG San Emidio facility is an 11.75 MW geothermal project located just inside the eastern border of Washoe County, Nevada. Sierra originally entered into a 30-year long-term PPA in 1986 for a 3.8 MW geothermal power plant. Sierra received Commission approval for an amended and restated PPA in Docket No. 11-08010, which increased the capacity under the contract. Sierra has a 25-year contract with the facility that expires on December 31, 2037.

6. Battle Mountain Solar
Battle Mountain Solar is a 101 MW solar PV facility located near Battle Mountain, Nevada. The project incorporates 25 MW of BESS. The solar array declared commercial operation on June 23, 2021. The project was approved by the Commission in Docket No. 18-06003. The PPA is for 25 years.

7. Dodge Flat Solar
Dodge Flat Solar is a 200 MW solar PV facility located in Washoe County, Nevada. The project incorporates 50 MW of BESS. The solar farm declared commercial operation on March 2, 2022. The project was approved by the Commission in Docket No. 18-06003. The PPA is for 25 years.

8. Fish Springs Ranch Solar
Fish Springs Ranch is a 100 MW solar PV facility located in Washoe County, Nevada. The project incorporates 25 MW of BESS. The solar farm declared commercial operation on March 15, 2022. The project was approved by the Commission in Docket No. 18-06003. The PPA is for 25 years.

9. Nevada Solar One
The Nevada Solar One facility is a 69 MW concentrated solar thermal plant located in Eldorado Valley near Boulder City, Nevada. The solar thermal plant came online in 2007. Sierra purchases 22.1 MW from the facility, with the balance purchased by Nevada Power. Nevada Power's and Sierra's PPA with the facility expires on December 31, 2027.

10. Techren Solar IV

Techren Solar IV is a 25 MW solar PV facility located in Boulder City, Nevada and declared commercial operation on October 7, 2020. The project was approved by the Commission in Docket No. 17-11004. The PPA is for 25 years.

14 Fleish Hydro Power Plant

The Fleish facility, a/k/a TMWA Fleish, is a 2.4 MW hydro-electric project located on the California/Nevada border southwest of Reno, Nevada. The hydro facility is owned by Truckee Meadows Water Authority ("TMWA") and went into commercial operation in 2008. Sierra has a 20-year PPA with the facility that expires on June 1, 2028. The Companies provided a response to TMWA's Request for Offers concerning this hydroelectric facility on February 2nd, 2024. TMWA completed their reviews and informed the Companies of their decision to select a different counterparty for future offtake agreements following the expiration of the current agreement with Sierra.

15 Verdi Hydro Power Plant

The Verdi facility, a/k/a TMWA Verdi, is a 2.4 MW hydro-electric project located in Washoe County, Nevada. The hydro facility is owned by the Truckee Meadows Water Authority ("TMWA") and went into service in 2009. Sierra has a 20-year PPA with the facility that expires on June 1, 2029. Sierra provided a response to TMWA's Request for Offers concerning this hydroelectric facility on February 2nd, 2024. TMWA completed their reviews and informed the Companies of their decision to select a different counterparty for future offtake agreements following the expiration of the current agreement with Sierra..

16 Washoe Hydro Power Plant

The Washoe facility, a/k/a TMWA Washoe, is a 2.5 MW hydro-electric project located in Washoe County, Nevada. The hydro facility is owned by TMWA and went into service in 2008. Sierra has a 20-year PPA with the facility that expires on June 1, 2028. Sierra provided a response to TMWA's Request for Offers concerning this hydroelectric facility on February 2nd, 2024. TMWA completed their reviews and informed the Companies of their decision to select a different counterparty for future offtake agreements following the expiration of the current agreement with Sierra.

17 Truckee Meadows Waste Water Facility ("TMWWF")

The TMWWF is 0.8 MW biogas facility with which Sierra has a PC-only purchase agreement. The agreement was approved by the Commission in 2006. The contract expires on September 1, 2026.

18 Kingston Hydro

Kingston Hydro is a small, 0.175 MW, hydro facility located in Lander County, Nevada. It is owned by Young Brothers. The facility received a rebate under Sierra's Hydro Demonstration Program. Under the demonstration program, the rights to the PCs are assigned to Sierra. The PCs from this facility are included in the "RENGEN" non-solar credit total designation reported in the RPS Annual Compliance filing.

19 Mill Creek Hydro

Mill Creek Hydro is a small, 0.037 MW, hydro facility located in Elko County, Nevada. It is owned by Van Norman Ranches, LLC. The facility received a rebate under Sierra's Hydro Demonstration Program. Under the demonstration program the rights to the PCs are assigned to Sierra. The PCs from this facility are included in the "RENGEN" non-solar credit total designation reported in the RPS Annual Compliance filing.

20 RO Ranch Hydro

RO Ranch Hydro is a small, 0.225 MW, hydro facility located in Churchill County, Nevada. It is owned by BTAZ Nevada, LLC. The facility received a rebate under Sierra's Hydro Demonstration Program. Under the demonstration program the rights to the PCs are assigned to Sierra. The facility was shut down indefinitely, however, the PPA is still active. If the facility is re-powered, the PCs would be included in the "RENGEN" non-solar credit total designation reported in the RPS Annual Compliance filing.

Figure REN-49 below is a map showing all renewable facilities owned by or contracted to Nevada Power and Sierra. The map includes Hoover Dam, which can now be used towards RPS compliance, as well as renewable facilities where the Companies are the counterparty to a PPA under which the PCs from the facilities are assigned to customers under an NGR agreement and cannot be used by the Companies to meet the RPS. Nevada Power is currently forecasting that the projected RPS credits generated from these resources will be 2.54 percent lower for Nevada Power and 0.55 percent lower at Sierra for the 2026 Joint IRP's 2027-2029 action plan ("Action Plan") period based on historical trends reflecting the most recent operating data.

FIGURE REN-49
RENEWABLE ENERGY MAP

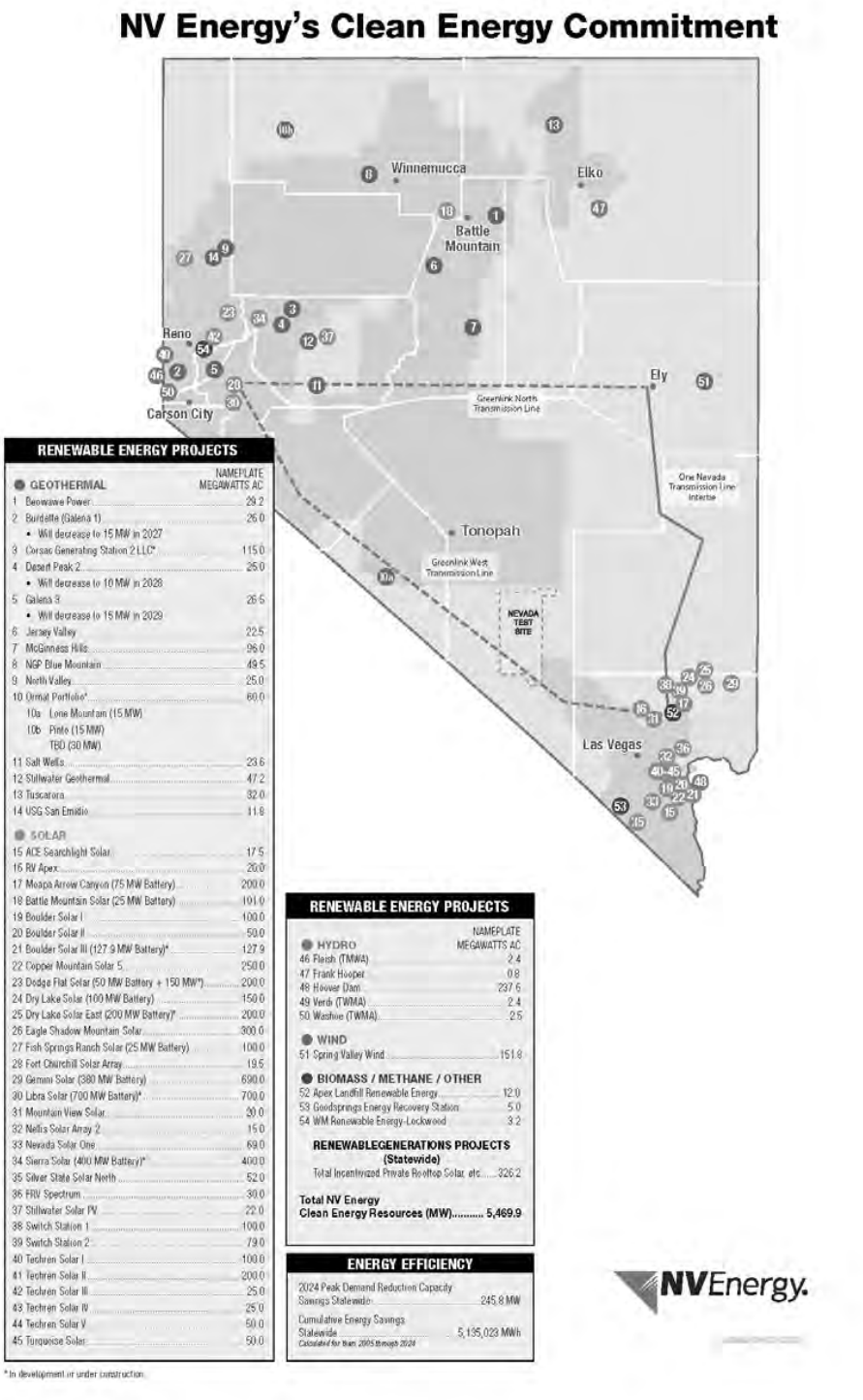

I. Informational Updates

Valmy Geothermal Resources Update

As of the date of this filing, the Companies have received the following two bilateral proposals: the Nevada Geothermal Portfolio, and the North Nevada Geothermal Portfolio, each consisting of a portfolio of geothermal resources that include one or more proposed geothermal project sites that are located near the Valmy region. Both bilateral proposals were brought to the Companies in conjunction with a sleeved PPAs for offtake dedicated to specific customers, and are discussed in detail in this Renewables Section's Part E above.

The Companies will continue to pursue any bilateral opportunities as well as continue to solicit RFPs for renewable energy, including geothermal resources, in areas including, but not limited to, the Valmy region.

E. TRANSMISSION PLAN

A. INTRODUCTION

The regulations governing integrated resource planning require that the Companies include in their triennial IRPs (Integrated Resource Plan) a 20-year plan to meet the transmission needs of native load customers[1] and service requests from third parties.[2] This transmission plan is built upon the load forecasts, system characteristics, existing and future transmission facilities and obligations as described in this section. Based in part on these key system characteristics, the transmission plan examines the capabilities of the existing transmission system to determine the need for and timing of any additional transmission facilities.

In order to meet increasing large customer needs, the transmission plan includes several new projects. Transmission projects driven by customers have controls in place at each phase, meant to reduce the financial risk to both the Companies and native load customers. These project controls include the customer providing an advance subject to potential refund (ASTPR), security, construction deposits, reduction in service charges, and customer construction milestones. These controls are defined in each customer's Rule 9 agreement.

The transmission plan includes projects that will positively impact reliability and future load growth capabilities. These have been identified during the annually recurring North American Electric Reliability Corporation (NERC) TPL-001-5.1 transmission planning reliability requirements standard annual study assessment's corrective action plan (CAP). Some violations and the associated mitigation may not meet the definition of Bulk Electric System (BES) because they are under 100 kV but are consistent with the intent and requirements of NERC transmission reliability standards. These include projects that are of particular concern to the affected rural communities because they reduce outage durations, increase overall reliability and improve power quality issues such as voltage stability.

In section C, the Companies request approval of the various transmission projects, explain the need for each project and the project estimates. The projects are required to serve customer load growth, new generation resources[3], transmission service requests, transmission interconnection requests and reliability improvements.

[1] The term "Native Load Customer" comes from regulations established by the Federal Energy Regulatory Commission ("FERC") creating and maintain their open access transmission policies. Nevada Power and Sierra operate a single Balancing Area Authority or ("BAA"), which is responsible for serving both native load and transmission-only customers. Native load customers are the bundled retail customers of both Nevada Power and Sierra. Native load customers do not plan for and purchase transmission access directly from the BAA. Instead, Nevada Power and Sierra plan for and reserve transmission access on their behalf, consistent with the FERC's open access transmission policies, and pursuant to the Companies' Open Access Transmission Tariff or "OATT".

[2] *See* NAC § 704.9385(3).

[3] At the time of the 2026 IRP filing, the cost estimates provided for the generation resources transmission service requests are based on system impact study results which are a rough order of magnitude estimate. When the facilities studies are completed a more refined cost estimate and construction forecasts will be available.

B. OVERVIEW OF THE COMPANIES' TRANSMISSION SYSTEM

Section 704.9321(3)(e) of the NAC requires the Companies to provide maps depicting facilities required for the transmission of electric energy. This information is set forth in the map marked as Figure TP-2 below. This map shows the transmission system in both the northern and southern parts of Nevada, at each voltage.

The consolidated Nevada Power and Sierra transmission balancing authority area ("BAA") encompasses approximately 45,000 square miles. The Nevada Power service area covers approximately 4,500 square miles, with approximately 1,071,000 electric customers and 1,969 miles of FERC-jurisdictional transmission lines with voltages ranging from 69 kV to 525 kV. The Sierra transmission service area encompasses more than 40,000 square miles, with approximately 386,000 electric customers and 3,036 miles of FERC-jurisdictional transmission lines ranging from 55 kV to 525 kV.[4]

[4] Total Sierra transmission line mileage for both FERC-jurisdictional and Nevada-jurisdictional facilities is 4,157 miles with voltages ranging from 55 kV to 345 kV. This excludes the 235-mile, 500 kV One Nevada Transmission Line ("ON Line"). ON Line is included as part of Nevada Power's overall transmission system.

FIGURE TP-1
NV ENERGY TRANSMISSION SYSTEM DIAGRAM

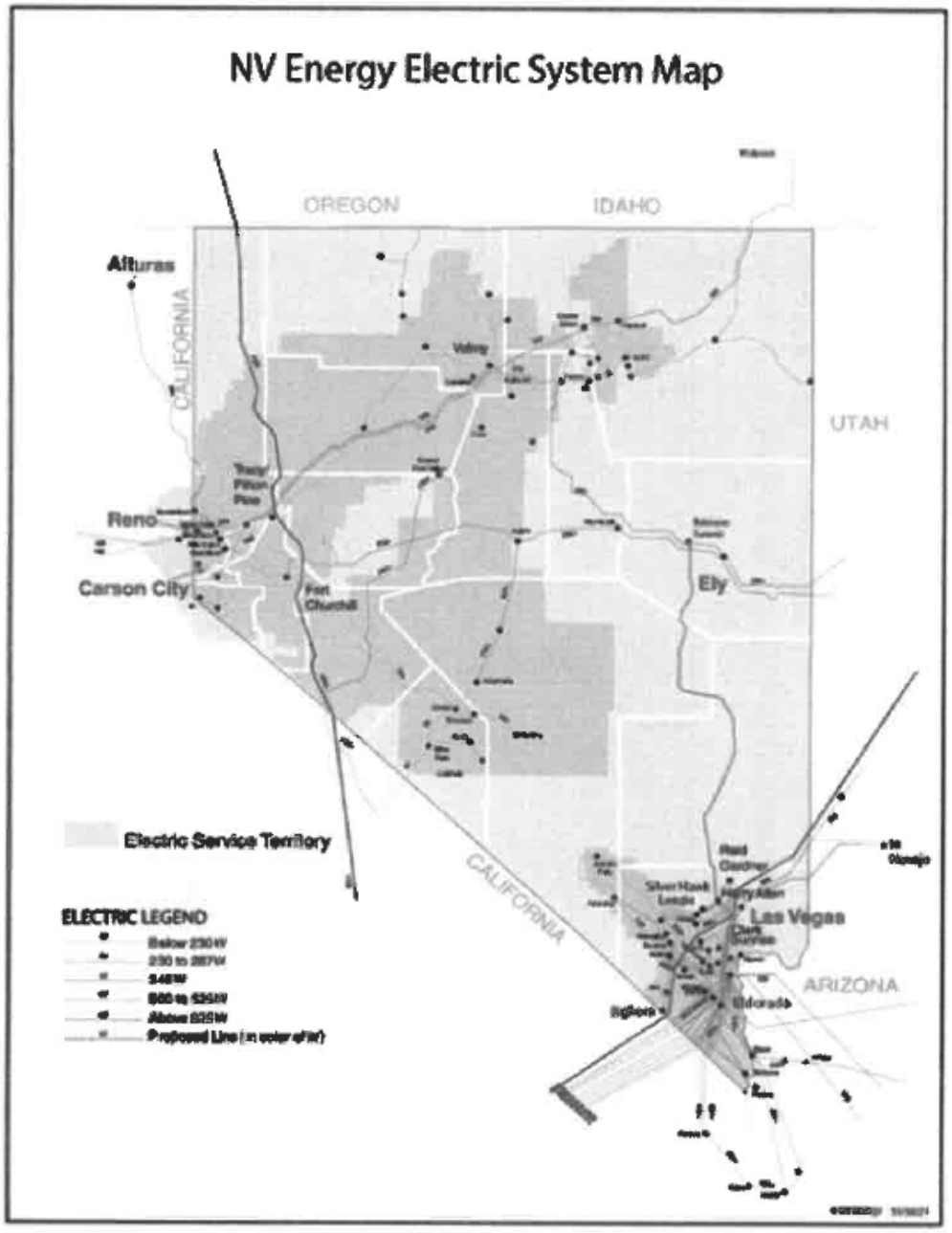

a. NEVADA POWER TRANSMISSION SYSTEM

The Nevada Power transmission system can be described in three sections, each shown in Figure TP-2, TP-3, and TP-4. The first section, generally referred to as the Nevada Power internal system, is designated by the "#1," and is shown as the area between the cut plane lines (the heavy dashed lines). A cut plane is a reference to a combination of lines, either internal or external to a transmission system, which due to loading capabilities are collectively monitored or examined for limitations. The Nevada Power internal system is located within the Las Vegas Valley where the majority of Nevada Power's customers reside.

The second section, designated with a "#2," is identified by the dashed line on the bottom-right of Figure TP-2. This transmission path is known as the Southern Cut Plane ("SCP") and shows the transmission lines Nevada Power uses to transfer power through major substations on the southern interface of its transmission system – namely Mead, McCullough, and Eldorado – located south of Las Vegas in the Eldorado Valley. As detailed later under the Transmission Path Ratings portion of this plan, the SCP has been replaced by the formally accepted Western Electricity Coordinating Council ("WECC") path known as the Southern Nevada Transmission Interface ("SNTI"). The SNTI is composed of numerous transmission lines electrically situated in parallel with each other. These lines are connected to the Mead, McCullough, and Eldorado Substations, which are prominent trading hubs south of Nevada Power's transmission system and are used to import and export energy that is scheduled across this rated path.

The third section is represented by the dashed line on the top-right of Figure TP-2, designated with a "#3," is referred to as the Northern Cut Plane ("NCP"), and comprises the Red Butte-Harry Allen 345 kV interconnection with PacifiCorp, and the Crystal interconnection with the Navajo-Crystal-McCullough 525 kV line.

FIGURE TP-2
NEVADA POWER TRANSMISSION SYSTEM DIAGRAM

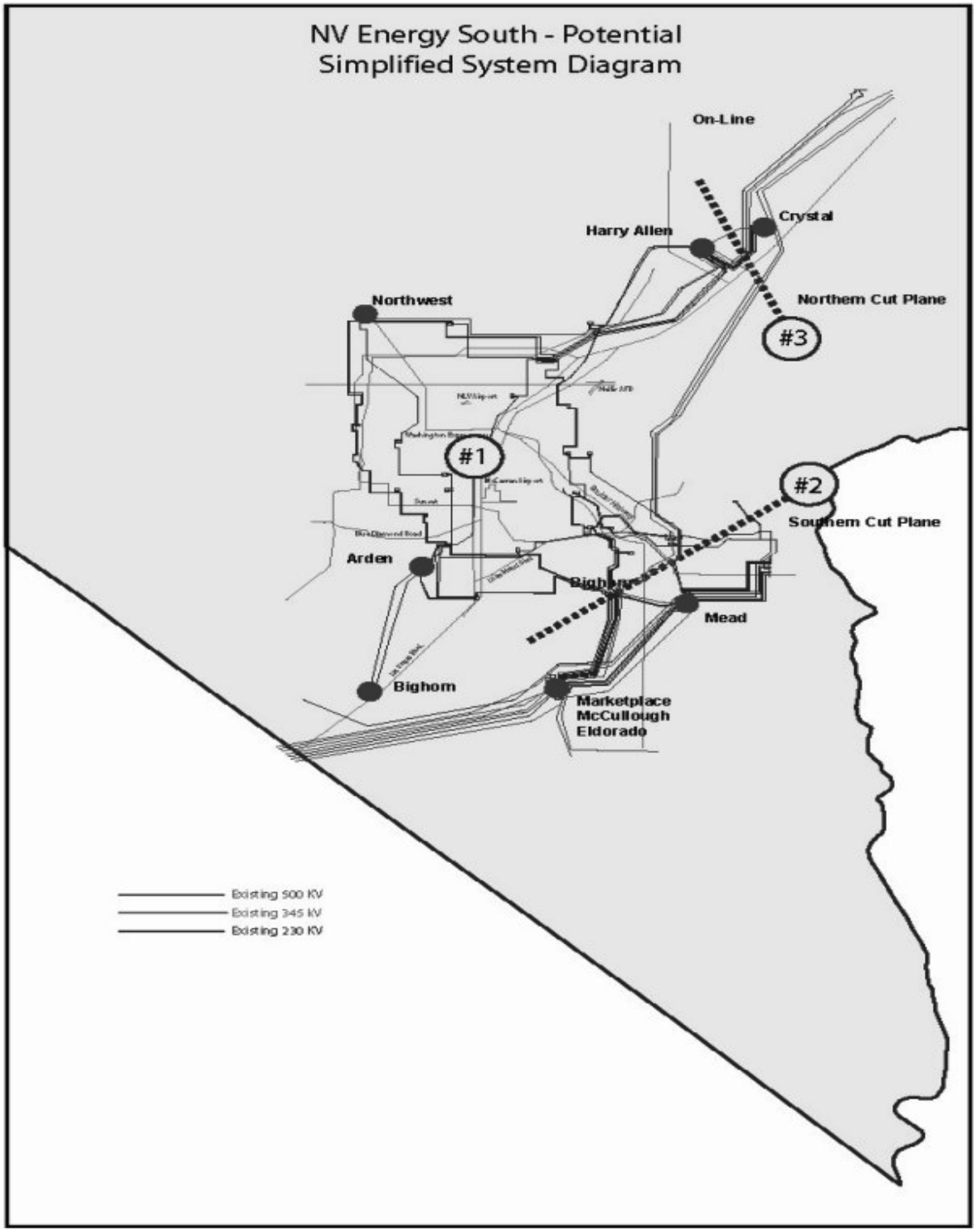

b. SIERRA TRANSMISSION SYSTEM

The Sierra system is best described as two sections as shown in the map in Figure TP-3. The first section, depicted as the area within the circle, encompasses the Reno, Tracy, and Carson City areas. Designated with a "1", this section represents the majority of the Sierra system load and is where the majority of Sierra's customers reside. The second section of the Sierra service area is the area outside the inner circle, designated with the "2", in the northern portion of the state. This section is characterized by long transmission lines serving heavy industrial (i.e., mining) and rural load widely dispersed throughout the northern portion of the state.

FIGURE TP-3
SIERRA TRANSMISSION SYSTEM DIAGRAM

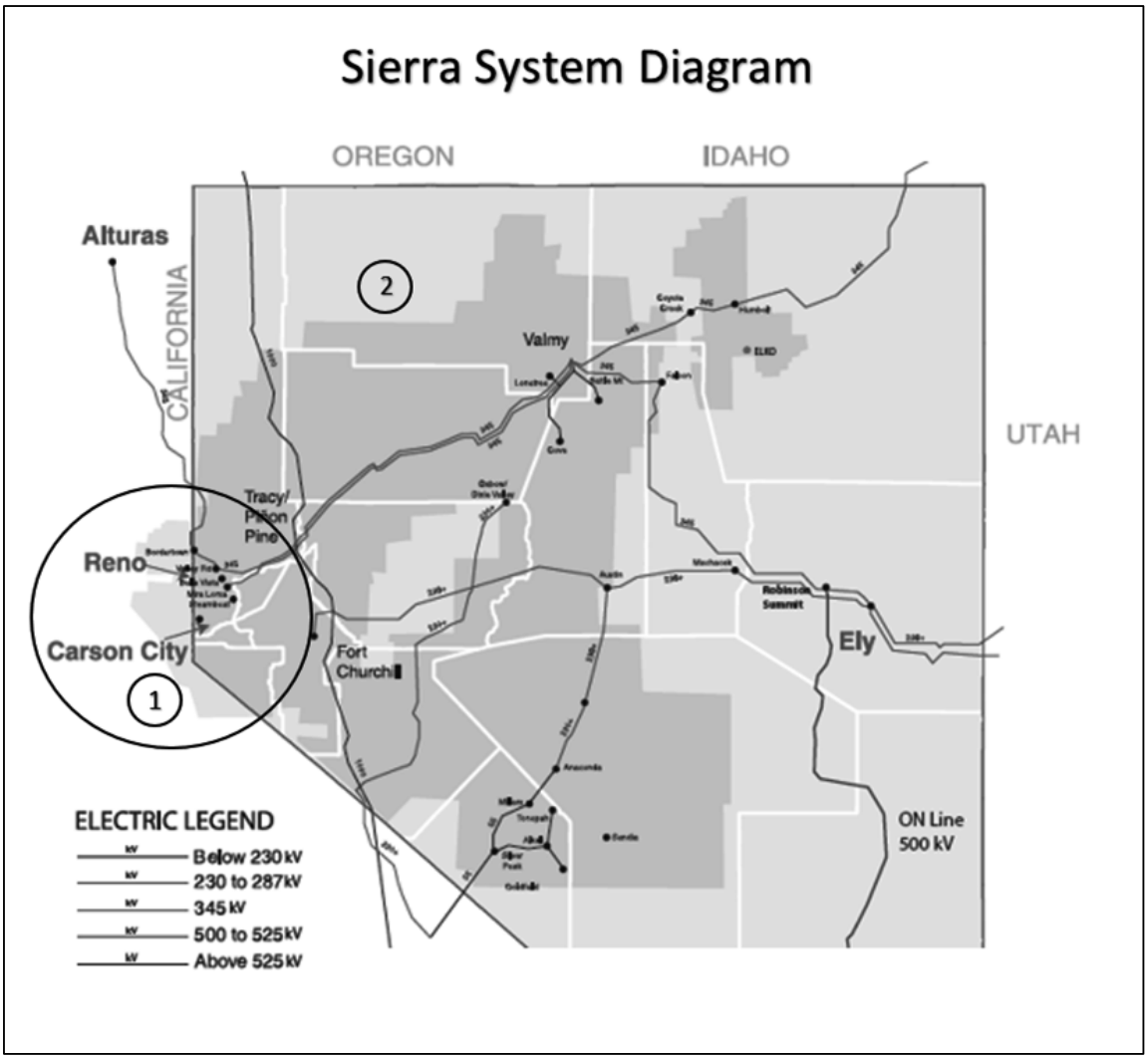

TRANSMISSION PATH RATINGS

Per NAC §704.9385(3)(a), the Transmission Plan must provide a summary of the capabilities of the transmission system, including import and export capabilities and the rating of significant transmission paths. NAC §704.9321(3)(d) requires the Companies to provide information regarding interconnections with other utilities and independent power producers. Nevada Power owns five significant rated transmission paths, as shown below in Figure TP-4 and TP-5, each consisting of one or more transmission lines that are granted a rating by the WECC. Nevada Power is a partial owner of one additional WECC-rated transmission path, that being the WECC East of River ("EOR") Path 49.

FIGURE TP-4
DIAGRAM OF NEVADA POWER TIE LINES, EXISTING COMPANY-OWNED GENERATION, AND EXISTING INDEPENDENT GENERATION

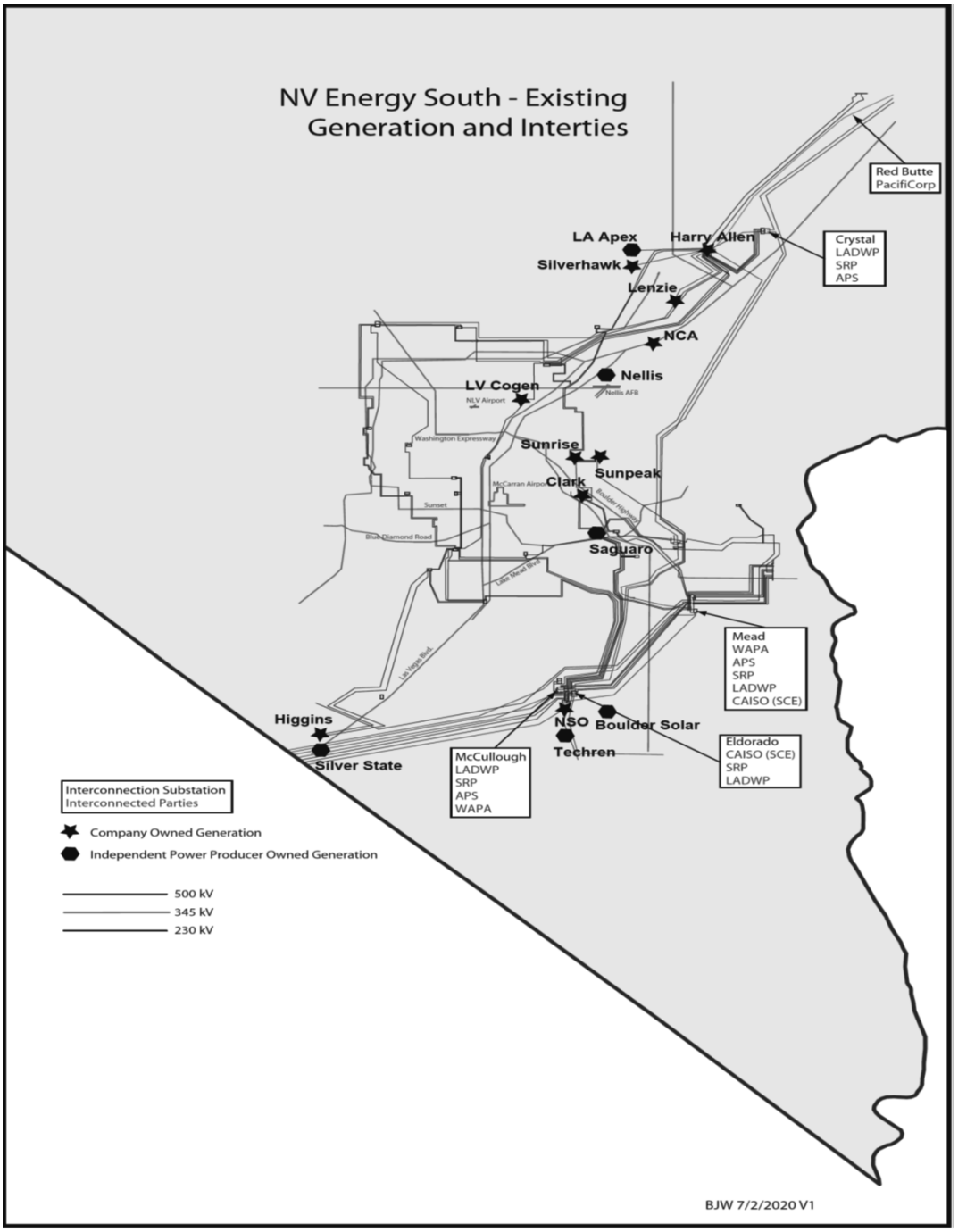

Crystal 525 / 230 kV Path (WECC Path # 77). The Crystal 525/230 kV path allows energy to be moved from the Navajo-Crystal-McCullough 525 kV transmission line into the northeast boundary of the Nevada Power system via its Crystal Substation. This path is rated for 950 MW of inbound flow measured at the Crystal Substation. This is a 230 kV phase shifter-controlled path.

Harry Allen – Red Butte 345 kV Path (WECC Path # 35 – TOT2C). The Harry Allen to Red Butte 345 kV path allows energy to be moved to and from Utah (PacifiCorp – East) and the northeast corner of the Nevada Power system at the Harry Allen switching station. The two phase shifters at Harry Allen control the flow on this path and they are occasionally used to mitigate unscheduled flow in the WECC interconnection. This path has a north to south rating of 600 MW and a south to north rating of 580 MW

Southern Nevada Transmission Interface (WECC Path #81). Nevada Power owns and operates the Southern Nevada Transmission Interface, or SNTI, shown below in Figure TP-5. SNTI is comprised of 21 transmission tie-lines between the Nevada Power/Sierra combined BAA and the neighboring BAAs in southern Nevada (Western Area Power Administration, Lower Colorado, Los Angeles Department of Water and Power or "LADWP", and the California Independent System Operator Corporation ("CAISO"). This can be seen in Figure TP-5. The SNTI represents existing lines, and the path is routinely evaluated and annually updated as a part of the NV Energy seasonal operating studies. The accepted SNTI rating as approved by WECC is 4,533 MW North-to-South and 3,970 MW South-to-North.

Harry Allen – Eldorado 525 kV Path (WECC Path #84). The Harry Allen to Eldorado 525 kV path connects Nevada Power and Southern California Edison. It represents a connection between Nevada Power and CAISO Balancing Authorities. This path is represented in Figure TP-5 below. The path has a North-to-South rating of 3,496 MW and a South-to-North rating of 1,390 MW.

Southern Nevada Transmission Interface+ (WECC Path #89). Nevada Power owns and operates the Southern Nevada Transmission Interface+, or SNTI+, which is SNTI (WECC Path #81) and Harry Allen to Eldorado 525 kV (WECC Path #84) combined. The SNTI represents existing lines, and the path is routinely evaluated and annually updated as a part of the NV Energy seasonal operating studies. The accepted SNTI+ rating as approved by WECC is 6,257 MW North-to-South and 4,681 MW South-to-North.

FIGURE TP-5
SOUTHERN NEVADA TRANSMISSION INTERFACES

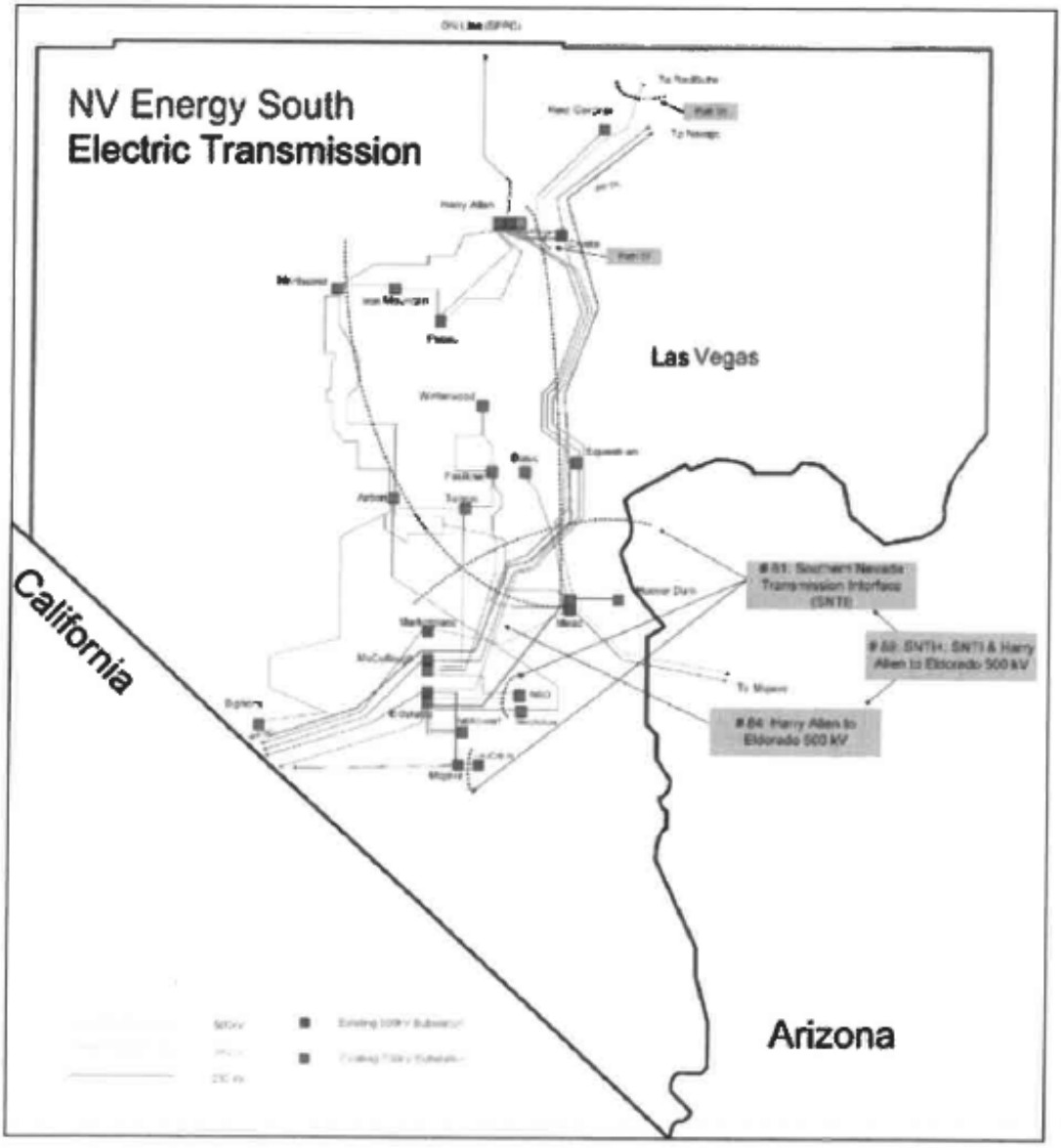

Sierra owns five WECC rated transmission paths, each consisting of one or more transmission lines. Rated transmission paths are identified in Figure TP-6 below. Ratings are established through the WECC process on a non-simultaneous basis. These transmission path ratings may be subject to change over the twenty-year planning period, depending on changes to the system configuration. Operation of the paths are based on simultaneous limits described as Operational Transfer Capabilities and are posted on Sierra's Open Access Same-time Information System ("OASIS").

FIGURE TP-6
SIERRA RATED TRANSMISSION PATHS

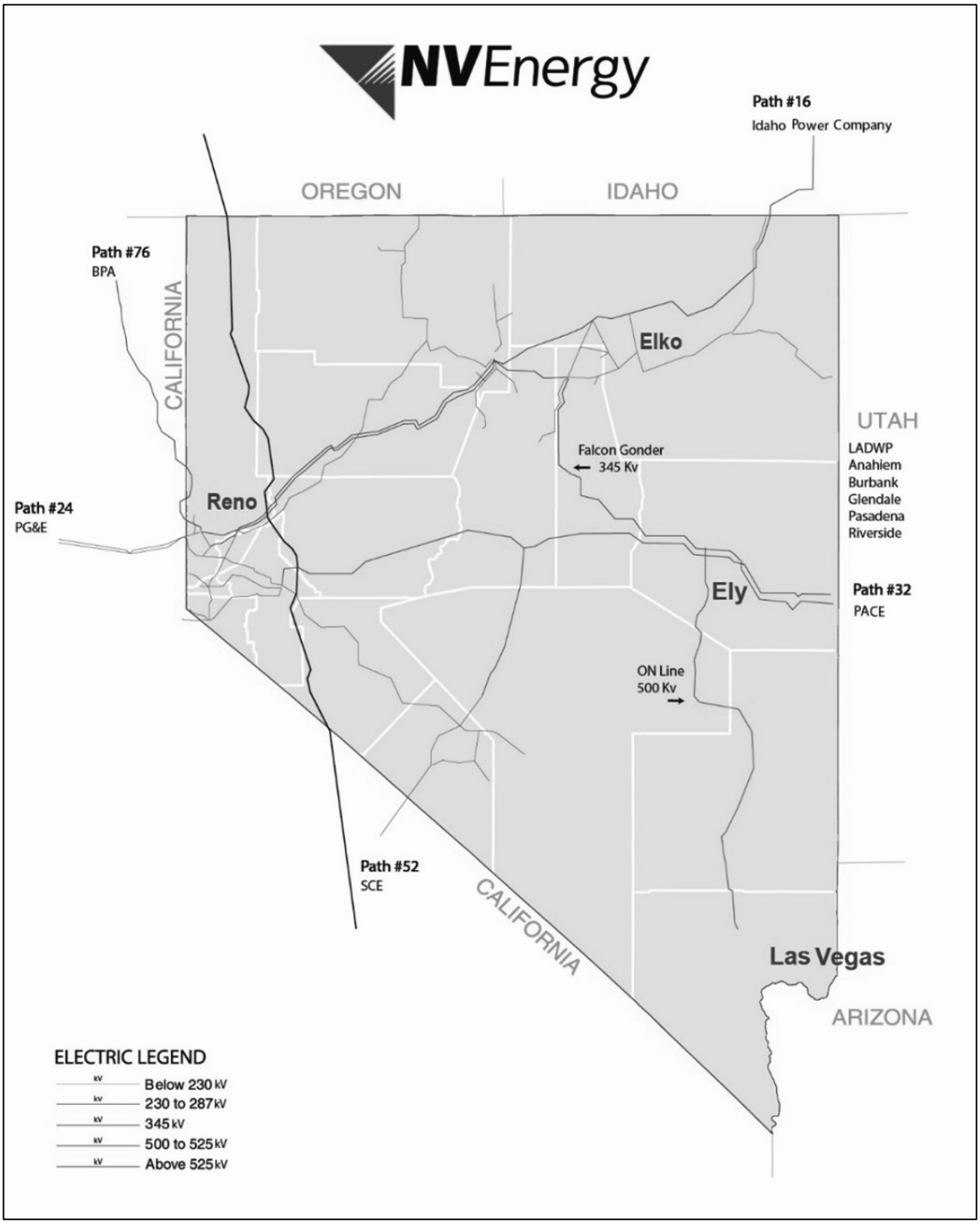

Idaho – Sierra (WECC Path # 16). This path is rated for 525 MW of inbound flow and 360 MW of outbound flow. The path is a 345 kV line from Idaho Power's Midpoint Substation, near Twin Falls, Idaho that connects to Sierra's Humboldt Substation in the northeast corner of Sierra's transmission system.

Pacific Gas and Electric – Sierra (WECC Path # 24). This path has two 120 kV lines and one 60 kV line and is rated for a total flow of 160 MW in-bound and 150 MW out-bound. The path connects Pacific Gas and Electric's 115 kV system near Donner Summit, California, to Sierra's 120 kV and 60 kV transmission near Truckee, California. This path has a 150 MVA phase shifter at California Substation near Verdi, Nevada, to control the path flow.

Pavant – Gonder 230 kV and Intermountain – Gonder 230 kV (WECC Path #32). This path has two 230 kV tie lines. Total flow is rated 440 MW in-bound and 235 MW out-bound. PacifiCorp's Pavant and Los Angeles Department of Water and Power's Intermountain substations are both in Utah and each has a 230 kV line that connects to the Gonder Substation near Ely, Nevada. A 150 MVA 120 kV phase shifter at the Ft. Churchill Substation near Yerington, Nevada, has some control of the line flows on this rated path.

Silver Peak – Control 55 kV (WECC Path #52). This path is rated 17 MW bi-directionally. The path starts at Silver Peak, Nevada and ends at SCE's Control Substation, which is located near Bishop, California. This path includes two 60 kV lines and two 17 MVA phase shifters in series to control the path flows.

Alturas Project (WECC Path # 76). This path is rated at 300 MW bi-directionally. The Alturas path is connected to Bonneville Power Authority's 230 kV transmission at Hilltop 230 kV Substation near Alturas, California. Voltage is stepped up to 345 kV at Hilltop with a 300 MVA transformer. From Hilltop, the path continues south where it interconnects with Ft. Sage Substation. This path has a 300 MVA phase shifter at Bordertown Substation to control the path flows.

IMPORT CAPABILITY

Section §704.9385(3)(a) of the NAC requires that the Transmission Plan describe the import capability of the transmission system. The term "import capability" is defined as the energy that can be transferred into a BAA. Import capability is determined in accordance with WECC, and North American Electric Reliability Corporation ("NERC") reliability criteria. Accordingly, the system must be capable of meeting all performance criteria for steady state and single contingency outage conditions at the stated import level. The Companies' system import capability is dependent on transmission line flows, generation dispatch patterns, and system loads.

Figure TP-7 below shows the individual system import capabilities using the FERC's prescribed methods. These values reflect the system import limit using balanced line flows with internal generation adjusted to allow maximum system import capability. This figure does not provide a complete representation of each system's real-time import capabilities, as imports are dependent on load and the generation used to meet such load. Imports equal the load plus losses minus internal generation, or:

Imports = load + losses – internal generation

In real time, when all available generating units are being used to serve system load, imports will be equal to the difference between load, losses and generation. Whether the system has the capacity to perform a system wheel (*i.e.*, an import at one location in the system with a corresponding export at a different location in the system) under these circumstances is determined through studies, which the Companies routinely complete in response to transmission service requests.

FIGURE TP-7
SUMMARY OF SYSTEM IMPORT CAPABILITY

Summary of Import Capability (MW)					
	2026	**2027**	**2028**	**2029**	**2030**
Nevada Power	5200	5200	6200	6200	6200
Sierra	1275	2000	2000	2800	2800

Maximum import capability should not be confused with long-term, firm transmission capability under the OATT. Maximum import capability is measured using maximum load and minimum generation, where actual imports are highly dependent on load, generation, and available voltage support. Long-term, firm transmission service under the OATT must be available without limits imposed by load variations or other transmission customers' actions.

EXPORT CAPABILITY

Section 704.9385(3)(a) of the NAC also requires that the Transmission Plan describe the export capability of the transmission system. Nevada Power's and Sierra's system export capability are set forth in Figure TP-8 below. Export capability is limited by the capability of the transmission system, including load and generation. Export capability of the system is limited by the loss of the highest rated intertie.

Maximum export capability should not be confused with the Companies' long-term, firm transmission capability under the OATT. Each system's maximum export capability is determined by using minimum load and maximum generation resources within the system. Actual exports are highly dependent on load and generation. Long-term, Firm Transmission Service under the OATT must be deliverable without limits imposed by load variations or other transmission customers' actions.

FIGURE TP-8
SUMMARY OF EXPORT CAPABILITY

Summary of Export Capability (MW)					
	2026	**2027**	**2028**	**2029**	**2030**
Nevada Power	4120	4120	7090	7090	7090
Sierra	1125	1125	2000	2800	2800

TRANSMISSION SERVICE OBLIGATIONS

Per NAC §704.9385(3)(c) and NAC §704.9385(3)(d), the Transmission Plan must identify the transmission capacity required to serve bundled and unbundled retail transmission customers, and wholesale transmission customers the Companies are obligated to serve, as well as all existing and proposed transmission service agreements ("TSAs"), with transmission customers, the expiration dates of those obligations and their impacts on the transmission capacity available for use by bundled retail customers. Nevada Power and Sierra are obligated to provide transmission-only service to several transmission-only customers under TSAs. Existing Nevada Power TSAs are listed in Figures TP-9, TP-10 (not confirmed), TP-11 (not confirmed) and TP-12. Figure TP-9 lists Nevada Power's long-term transmission obligations for import into the BAA. TP-12 lists Nevada Power's long-term transmission obligations for exports out of the BAA. Existing Sierra TSAs are listed in Figures TP-13 and TP-14. Figure TP-13 shows Sierra's long-term transmission obligations for import into the BAA, and Figure TP-14 shows Sierra's long-term transmission obligations for exports out of the BAA. The impact of these combined TSAs on the amount of import transmission capacity available for use by bundled retail customers is reflected in the Transmission portion of the Load & Resource tables in Figures TP-15 and TP-16.

FIGURE TP-9
NEVADA POWER'S LONG-TERM BAA TRANSMISSION IMPORT OBLIGATIONS
(NETWORK CUSTOMERS)

Agreement	Delivery Interface	MW	Term
SNWA	SouthSys	30	6/1/2013 - 5/31/2028
LVVWD	SouthSys	60	6/1/2013 - 5/31/2028
City of Las Vegas	SouthSys	8	6/1/2013 - 5/31/2028
City of Henderson	SouthSys	12	6/1/2013 - 5/31/2028
City of North Las Vegas	SouthSys	4	6/1/2013 - 5/31/2028
Clark County Water Reclamation District	SouthSys	13	6/1/2013 - 5/31/2028
Wynn Las Vegas	SouthSys	31	10/1/2021 - 10/1/2032
MGM Resorts Inc.	SouthSys	161	10/1/2021 - 10/1/2026
Switch Ltd.	SouthSys	360	6/1/2017 - 6/1/2047
Caesar's Enterprises	SouthSys	83*	11/1/2023 - 9/1/2027
Sahara Las Vegas	SouthSys	5	1/1/2020 – 1/1/2025
Georgia Pacific Gypsum	SouthSys	4	2/1/2020 – 2/1/2025
Rio Las Vegas	SouthSys	9*	11/1/2023 - 11/1/2028
Hard Rock	SouthSys	14	1/1/2023 - 1/1/2028
Air Liquide	SouthSys	14	6/1/2021 - 4/1/2025
Overton Power District	SouthSys	221	7/1/2025 – 1/1/2035
Circus Circus LV	SouthSys	13	10/1/2020 – 10/1/2031

FIGURE TP-10
TRANSMISSION SERVICE REQUESTS, NOT CONFIRMED

Customer	POR	POD	MW	Start Date	Stop Date
LAWM	Gonder IPP	HA500	83	1/1/2028	1/1/2030

FIGURE TP-11
DESIGNATED NETWORK RESOURCE REQUESTS, NOT CONFIRMED

Customer	POR	POD	MW	Start Date	Stop Date
Truckee Donner PUD	Gonder Pavant	NorthSys	48	12/1/2027	8 years
Switch - Firm Power 2030	Mead 230 kV	SouthSys	500	4/1/2030	7 years
Switch	Midpoint	NorthSys	176	1/1/2028	8 years
Switch - Fulcrum	NorthSys	NorthSys	400	1/1/2029	6 years
Switch - Naniwa	NorthSys	NorthSys	600	10/1/2028	5 years
NVPM - Dodge Flats - BESS Charging	NorthSys	NorthSys	200	7/1/2027	20 years
NVPM - Blue Mountain Geo	NorthSys	NorthSys	30	1/1/1930	18 years
NVPM – Fish Springs Battery Charge	NorthSys	NorthSys	100	12/1/2027	21 years
NVPM - LUX Solar with Battery)	NorthSys	NorthSys	125	7/1/2028	25 years
NVPM - Trego Grid	NorthSys	NorthSys	200	6/1/2028	20 years
NVPM - Trego Grid - BESS Charging	NorthSys	NorthSys	200	6/1/2028	20 years
NVPM - Jersey Valley PV+BESS	NorthSys	NorthSys	67	11/1/2027	25 years
NVPM - White Pine Solar & Battery	NorthSys	NorthSys	350	12/1/2028	26 years
NVPM - Winston Solar	NorthSys	NorthSys	400	10/1/2029	25 years
NVPM - Winston Solar Grid Charge BESS	NorthSys	NorthSys	400	10/1/2029	25 years
NVPM - Sleepy Orange	NorthSys	NorthSys	500	5/1/1930	26 years
NVPM - Rose of Snowville	NorthSys	NorthSys	20	10/1/1930	21 years
NVPM - Stony Point	NorthSys	NorthSys	20	10/1/2029	22 years
NVPM - Pumpernickel	NorthSys	NorthSys	20	12/1/1930	21 years
NVPM - Trexler	NorthSys	NorthSys	20	12/1/1930	21 years
NVPM - Big Smoky	NorthSys	NorthSys	20	12/1/1930	21 years
NVPM - Baltazor	NorthSys	NorthSys	25	12/1/2029	17 years
NVPM - Whirlwind	NorthSys	NorthSys	30	12/1/2029	17 years

Customer	POR	POD	MW	Start Date	Stop Date
NVPM - Dixie Valley West	NorthSys	NorthSys	35	12/1/2028	18 years
NVPM - McGee	NorthSys	NorthSys	25	12/1/2028	18 years
NVPM - Excelsior	NorthSys	NorthSys	25	12/1/1930	16 years
NVPM - Mason	NorthSys	NorthSys	25	12/1/1930	16 years
NVPM - Hot Pot Solar & Storage	NorthSys	NorthSys	350	10/1/2029	21 years
NVPM - Iron Point Solar & Storage	NorthSys	NorthSys	250	12/1/2029	21 years
NVPM - Dry Lake East II Grid Charging BESS	SouthSys	SouthSys	150	12/1/2027	20 years
NVPM - Southern Bighorn 1 and 2	SouthSys	SouthSys	400	7/1/2028	25 years
NVPM - Coyote Springs Solar and Storage	Harry Allen 500 kV	SouthSys	600	12/1/1930	26 years
NVPM - Commerce Station Energy Storage	SouthSys	SouthSys	100	5/1/2028	20 years
NVPM - Commerce Station Energy Storage BESS Charging	SouthSys	SouthSys	100	5/1/2028	20 years
NVPM - Dry Lake East Energy Storage II	SouthSys	SouthSys	150	12/1/2027	20 years
Fort Churchill 11 and 12	NorthSys	NorthSys	440	2/1/2031	30 years
Fort Churchill 3 thru 10	NorthSys	NorthSys	400	2/1/2030	30 years
Fort Churchill 15 and 16	NorthSys	NorthSys	440	2/1/2032	30 years
Fort Churchill 13 and 14	NorthSys	NorthSys	440	2/1/2031	30 years
Harry Allen 8 and 9	SouthSys	SouthSys	440	2/1/2032	30 years
Silverhawk Units 7 thru 9	Harry Allen 500 kV	SouthSys	1266	2/1/2032	30 years
Silverhawk Units 5 and 6	Harry Allen 500 kV	SouthSys	440	2/1/2031	30 years
Silverhawk Units 10 thru 12	Harry Allen 500 kV	SouthSys	700	6/1/2032	30 years

FIGURE TP-12
NEVADA POWER POINT OF DELIVERY LONG-TERM BAA TRANSMISSION EXPORT OBLIGATIONS

TSA	MW	POD	Term
Energy Keepers	25	MEAD230	12/01/2025-12/01/2026
Morgan Stanley	50	ELDORADO230	03/01/2021-03/01/2031
OME - Whitegrass No. 1	3	MCCULLOUG230	01/01/2027-01/01/2032
OME - Fish Lake	13	ELDORADO230	01/01/2028-01/01/2033
OME - Humboldt House 1	20	ELDORADO230	06/01/2027-06/01/2032
ONGP	2	CRYSTAL500	12/01/2023-02/01/2028
ONGP	3	CRYSTAL500	01/01/2026-01/01/2031
ONGP	3	MEAD230	10/01/2016-01/01/2034
ONGP	6	CRYSTAL500	01/01/2025-01/01/2030
ONGP	8	CRYSTAL500	01/01/2025-01/01/2030
ONGP	10	CRYSTAL500	01/01/2027-01/01/2032
ONGP	12	CRYSTAL500	02/01/2023-02/01/2028
ONGP	16	CRYSTAL500	08/01/2022-08/01/2027
ONGP	16	CRYSTAL500	01/01/2025-01/01/2030
ONGP	18	MEAD230	01/01/2026-01/01/2031
ONGP	24	MEAD230	01/01/2014-01/01/2034
ONGP	24	CRYSTAL500	12/01/2022-12/01/2027
ONGP	24	CRYSTAL500	09/01/2022-09/01/2027
ONGP	24	CRYSTAL500	01/01/2024-01/01/2029
ONGP	24	CRYSTAL500	01/01/2025-01/01/2030
ONGP	24	CRYSTAL500	01/01/2026-01/01/2031
ONGP	25	CRYSTAL500	12/01/2026-12/01/2031
ONGP	25	CRYSTAL500	01/01/2027-01/01/2032
ONGP	30	CRYSTAL500	12/01/2023-12/01/2028
SCAPPA	500	MCCULLOUG500	08/01/2023-08/01/2030
Salt River Project	25	NAVAJO500	12/01/2023-12/01/2028
STPK - Star Peak	6	MCCULLOUG500	12/01/2022-12/01/2027
STPK - Whitegrass No. 2	6	ELDORADO230	06/01/2027-06/01/2032
STPK - Star Peak	8	MCCULLOUG500	01/01/2027-01/01/2032
STPK - Humboldt House 2	25	ELDORADO230	01/01/2027-01/01/2032
Tenaska	50	MEAD230	01/01/2027-01/01/2032

FIGURE TP-13
SIERRA LONG TERM BALANCING AREA
TRANSMISSION IMPORT OBLIGATIONS

Agreement	Delivery Interface	MW	Term
Truckee Donner PUD	NorthSys	43	11/1/2016 - 12/1/2027
City of Fallon	NorthSys	22	4/1/2022 - 5/1/2029
Barrick	NorthSys	25	1/1/2014 - 1/1/2041
Barrick	NorthSys	12	1/1/2014 - 1/1/2033
Barrick	NorthSys	156	1/1/2016 - 1/1/2040
Barrick	NorthSys	55	1/1/2025 – 1/1/2041
Mt Wheeler	NorthSys	25	1/26/2017 - 1/1/2029
Mt Wheeler	NorthSys	80	6/1/2016 - 1/1/2029
BPA – Wells	NorthSys	111	10/1/2016 - 10/1/2044
BPA – Wells	NorthSys	6	1/1/2028 - 10/1/2044
BPA – Harney	NorthSys	35	10/1/2016 - 10/1/2028
BPA – Harney	NorthSys	86	5/1/2027 – 10/1/2044
BPA – Harney	NorthSys	7	10/1/2016 - 10/1/2028
Caesar’s Enterprises	NorthSys	7	9/1/2017 - 1/1/2033
Peppermill Resorts	NorthSys	9	1/1/2018 - 1/1/2028
Liberty Utilities	NorthSys	145	5/1/2027 - 1/1/2029
LMUD	NorthSys	30	10/1/2025 - 10/1/2045
Switch Ltd. - M345	NorthSys	31	1/1/2029 - 1/1/2032
Switch Ltd.	NorthSys	58	6/1/2017 - 1/1/2028
Newmont	NorthSys	100	6/1/2027 – 2/1/2062
Newmont	NorthSys	12	6/1/2027 – 1/1/2041
Newmont	NorthSys	43	6/1/2027 – 2/1/2062
Plumas Sierra	NorthSys	28	1/1/2029 – 1/1/2056

All Agreements with a term of 5 or more years are subject to roll over rights. The following clarifications are applicable to all of the above Long Term import obligations listed above: Network Customers import rights are equal to Designated Network Resources (“DNRs”) and may not have a termination date based on contract and roll-over rights. Subject to availability. Capacity reservations change by month for Network Customers; peak values provided are for the specified path.

FIGURE TP-14
NORTHERN POINT OF DELIVERY LONG TERM BAA TRANSMISSION EXPORT OBLIGATIONS

TSA	MW	POD	Term
OME-Humboldt House	20	GON.IPP	03/01/2026-03/01/2031
OME-Silverpeak	13	GON.IPP	10/01/2026-10/01/2031
OME-Whitegrass	6	GON.IPP	12/01/2028-12/01/2033
Ormat-Baltazor	20	GON.IPP	06/01/2024-06/01/2029
Ormat-Beowawe	24	GON.IPP	01/01/2027-01/01/2032
Ormat-Dixie Comstock	15	GON.IPP	06/01/2027-06/01/2032
Amor Soda Lake	13	GON.PAV	10/01/2021-10/01/2031
Amor Soda Lake	7	GON.PAV	10/01/2021-10/01/2031
Patua Project LLC	1	HILLTOP345	10/01/2021-10/01/2031
Patua Project LLC	18	HILLTOP345	01/01/2025-01/01/2030
Puget Sound	181	HILLTOP345	01/01/2028-01/01/2029
Puget Sound	181	HILLTOP345	01/01/2030-01/01/2035
Philips 66	50	MIDPOINT345	10/01/2025-10/01/2030
Puget Sound	48	MIDPOINT345	06/01/2027-01/01/2029
Puget Sound	48	MIDPOINT345	01/01/2030-01/01/2035
Amp Renew - Midpoint	2	SUMMIT120	10/01/2025-10/01/2030
Ormat-Dixie Comstock	15	SUMMIT120	01/01/2027-01/01/2032
West Point RNG	2	SUMMIT120	10/01/2021-10/01/2031
Idaho Valmy	262	MIDPOINT345	4/1/2023-termination pursuant to the Valmy Agreement with Idaho Power

All Agreements with a term of 5 or more years are subject to roll over rights.

Figure TP-15 below is a summary of the long-term transmission import and export obligations at each point of delivery in Figures TP-10 through TP-14.

FIGURE TP-15
LONG TERM BAA TRANSMISSION OBLIGATIONS SUMMARY

		Point of Delivery	MW Total
Nevada Power	**Import Obligations**	Mead 230 kV	**1042**
	Export Obligations	Crystal 525 kV	**273**
		Eldorado 230 kV	**114**
		McCullough 230/525 kV	**517**
		Mead 230 kV	**120**
		Navajo 525 kV	**25**
Sierra	**Import Obligations**	Gonder/ Pavant 230 kV	**210**
		Gonder IPP	**55**
		Hilltop 345 kV	**245**
		Midpoint 345 kV	**406**
		Mead 230 kV	**167**
		Red Butte	**43**
	Export Obligations	Hilltop 345 kV	**381**
		Gonder/ Pavant 230 kV	**20**
		Gonder IPP	**98**
		Summit 120 kV	**19**
		Midpoint 345 kV	**408**

NAC 704.9385(3)(e) requires the Companies provide “a table identifying all the transmission capacity that the utility has secured for its bundled retail transmission customers on both its transmission system and the transmission systems of other utilities.” Figure TP-16 and TP-17 below show the Companies’ long-term secured transmission capacity for bundled retail customers.
NAC 704.9385(3)(e) requires the Companies provide “a table identifying all the transmission capacity that the utility has secured for its bundled retail transmission customers on both its transmission system and the transmission systems of other utilities.” Figure TP-16 and TP-17 below show the Companies’ long-term secured transmission capacity for bundled retail customers.

FIGURE TP-16
NEVADA POWER TRANSMISSION CAPACITY SECURED FOR BUNDLED RETAIL TRANSMISSION CUSTOMERS

	Firm Capacity Reserved by Nevada Power for Native Load									
	2026	**2027**	**2028**	**2029**	**2030**	**2031**	**2032**	**2033**	**2034**	**2035**
Mead (Hoover)	375	375	375	375	375	375	375	375	375	375
Red Butte	0	0	0	0	0	0	0	0	0	0
McCullough	0	0	0	0	0	0	0	0	0	0
Crystal (Navajo)	260	260	260	260	260	260	260	260	260	260
Eldorado	0	0	0	0	0	0	0	0	0	0
Mohave (Laughlin)	54	54	54	54	54	54	54	54	54	54
ON Line (Sierra)	526	526	526	526	526	526	526	526	526	526
GL Nevada Projects	0	836	836	836	836	836	1207	1207	1207	1207
Total	1215	2051	2051	2051	2051	2051	2422	2422	2422	2422
	Firm Capacity Reserved by Nevada Power on Other Systems									
	2026	**2027**	**2028**	**2029**	**2030**	**2031**	**2032**	**2033**	**2034**	**2035**
	0	0	0	0	0	0	0	0	0	0

FIGURE TP-17
SIERRA TRANSMISSION CAPACITY SECURED FOR BUNDLED RETAIL TRANSMISSION CUSTOMERS

	Firm Capacity Reserved by Sierra for Native Load									
	2024	**2025**	**2026**	**2027**	**2028**	**2029**	**2030**	**2031**	**2032**	**2033**
Nevada Power (ON Line)	600	600	600	600	600	600	600	600	600	600
GL Nevada Projects	0	0	0	44	44	623	623	623	844	844
Total	600	600	600	644	644	1223	1223	1223	1444	1444
	Firm Capacity Reserved by Sierra on Other Systems									
	2024	**2025**	**2026**	**2027**	**2028**	**2029**	**2030**	**2031**	**2032**	**2033**
	0	0	0	0	0	0	0	0	0	0

NAC § 704.945(4) requires "a graph or table" that depicts "the allocation of the capacity of the transmission system of the utility between bundled retail transmission customers, unbundled retail transmission customers and wholesale transmission customers." This information is provided for the Companies in TP-18, below.

FIGURE TP-18
NV ENERGY TRANSMISSION SYSTEM CAPACITY ALLOCATION

	Nevada Power		**Sierra**	
Transmission Allocation	**MW**	**Percentage**	**MW**	**Percentage**
Unbundled/ Wholesale Transmission	626	11.70%	500	41.20%
Bundled Transmission	1215	23.80%	600	47.10%
Transmission Reliability Margin	200	3.40%	175	11.80%
Unallocated Transmission	3214	61.80%	0	0.00%
Total Import Capacity	**5,200**		**1,275**	

C. SPECIFIC REQUESTS FOR COMMISSION APPROVAL FOR NEW TRANSMISSION PROJECTS

NAC § 704.9385(3)(b) requires that the Transmission Plan include a description of transmission projects that the Companies are considering expanding or upgrading. NAC § 704.9355(1)(b) and (1)(c) require that the utilities develop a set of analyses of their options for supply to be considered for meeting the expected future demand on its system. These analyses must include an examination of the environmental impact of each option, considering the best available technologies and the environmental benefit of renewable resources, including construction of new transmission

facilities or upgrades to existing transmission facilities and purchase of long-term transmission rights on third-party transmission facilities.

The Companies are requesting Action Plan Approval to begin network upgrades required to support the development of the following.

SAPPHIRE 230/12 KV SUBSTATION

Sapphire substation, with two (2) 230/12 kV 37 MVA transformers, is required in 2027. Sapphire substation is a distribution area upgrade project that will provide relief to existing facilities at Gypsum substation to serve new loads in the north side of the Apex area of Las Vegas. Additionally, a Rule 9 agreement for 84 MVA has been executed with a Master Plan Developer agreement, requiring two (2) 230/12 kV 37 MVA transformers. The Sapphire substation will be connected to the existing 230 kV transmission system by folding the existing Harry Allen – Pecos 230 kV line #2. The Companies request approval to construct the Sapphire 230/12 kV substation with two transformers and to construct the line fold of existing Harry Allen – Pecos 230 kV line #2, considered Sapphire phase 1.

A Rule 9 agreement for 500 MW has been executed requiring a High Voltage Distribution (HVD) 230 kV line terminal at Sapphire and HVD line to the customer. An optional requirement may be constructed, if funded by the customer, a redundant 230 kV HVD line terminal and HVD line. The Companies request approval to construct the corresponding 230 kV line terminals and HVD lines, considered Sapphire phase 2.

A Rule 9 agreement, with the same customer described in phase 2 and for an additional 500 MW, has been executed requiring the construction of Basin 525/230 kV substation with a 525/230 kV 1,500 MVA transformer at Basin. The Basin substation is described and requested below. The agreement requires the Basin-Sapphire 230 kV line, which is to be terminated in the 230 kV HVD line terminal position which was built in phase 2. After which, the customer will be served from two (2) new HVD lines from Basin. The Companies request approval to re-terminate the HVD line terminal at Basin described in phase 2, creating the Sapphire-Basin 230 kV line, considered Sapphire phase 3.

A Rule 9 agreement for 855 MW is expected to be executed, before the PUCN issues a ruling on the 2026 IRP. The agreement requires two (2) HVD 230 kV line terminals at Sapphire and a second 525/230 kV 1,500 MVA transformer at Basin. The Companies request approval to construct the two HVD lines at Sapphire, considered Sapphire phase 4.

A Rule 9 agreement for 375 MW is expected to be executed before the PUCN issues a ruling on the 2026 IRP. The agreement requires the HGIII-Opal-Sapphire 230 kV line with a new 230 kV line terminal at Sapphire. The agreement also requires the construction of the Opal substation,

which is described and requested below. The customer will be served from new HVD lines from Opal. The Companies request approval to construct the 230 kV line terminal at Sapphire for the HGIII-Opal-Sapphire 230 kV lines, considered Sapphire phase 5.

Construction Scope: Phases 1 & 2 will **c**onstruct a line fold of the Harry Allen – Pecos 230 kV line #2, with two (2) 230/12 kV 37 MVA transformers, with associated line disconnect switches, breakers, bus work, control house protection panels, communications, HVD line and control equipment. Phases 3, 4, & 5 will construct 230 kV line terminals for HVD lines and a 230 kV line terminal for HGIII-Opal-Sapphire 230 kV line, with associated line disconnect switches, breakers, bus work, control house protection panels, communications, HVD lines and control equipment.

FIGURE TP-19
ONE LINE DIAGRAM OF SAPPHIRE PHASES 1 & 2

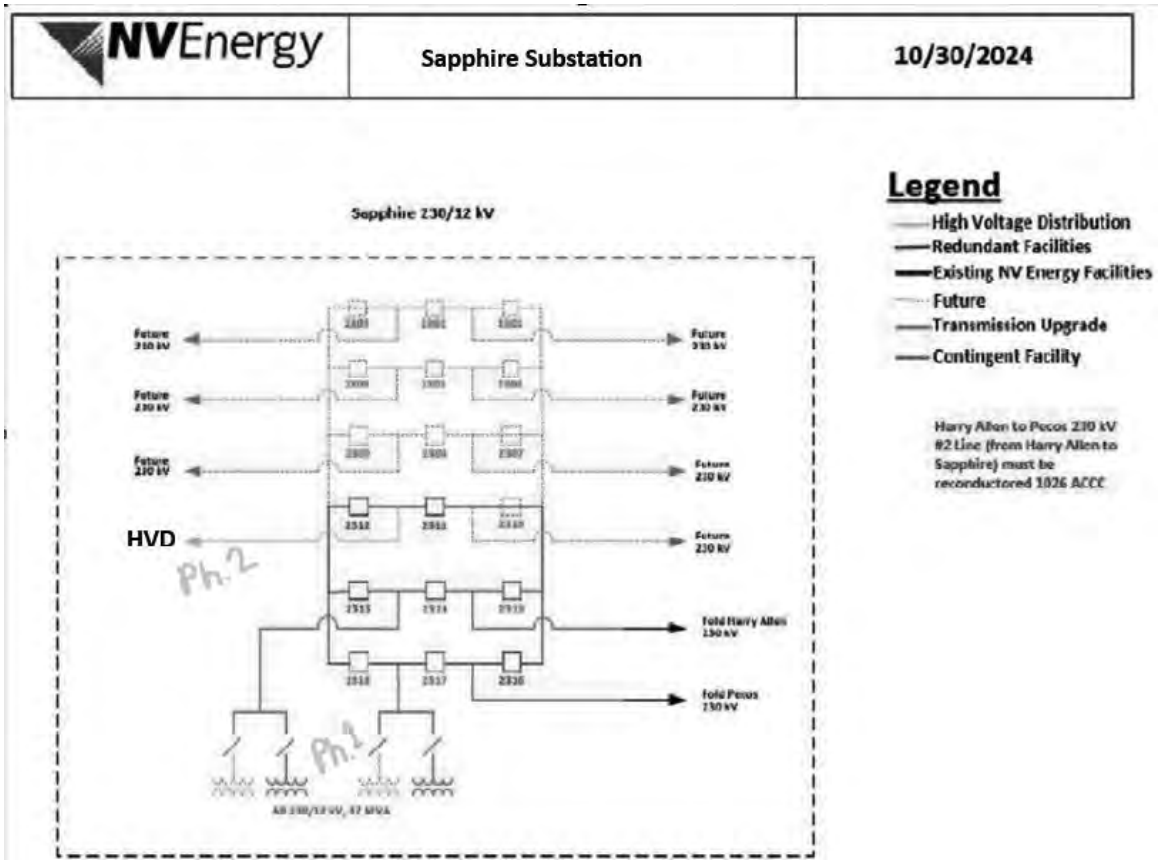

FIGURE TP-20
ONE LINE DIAGRAM OF SAPPHIRE – PHASES 3, 4, & 5

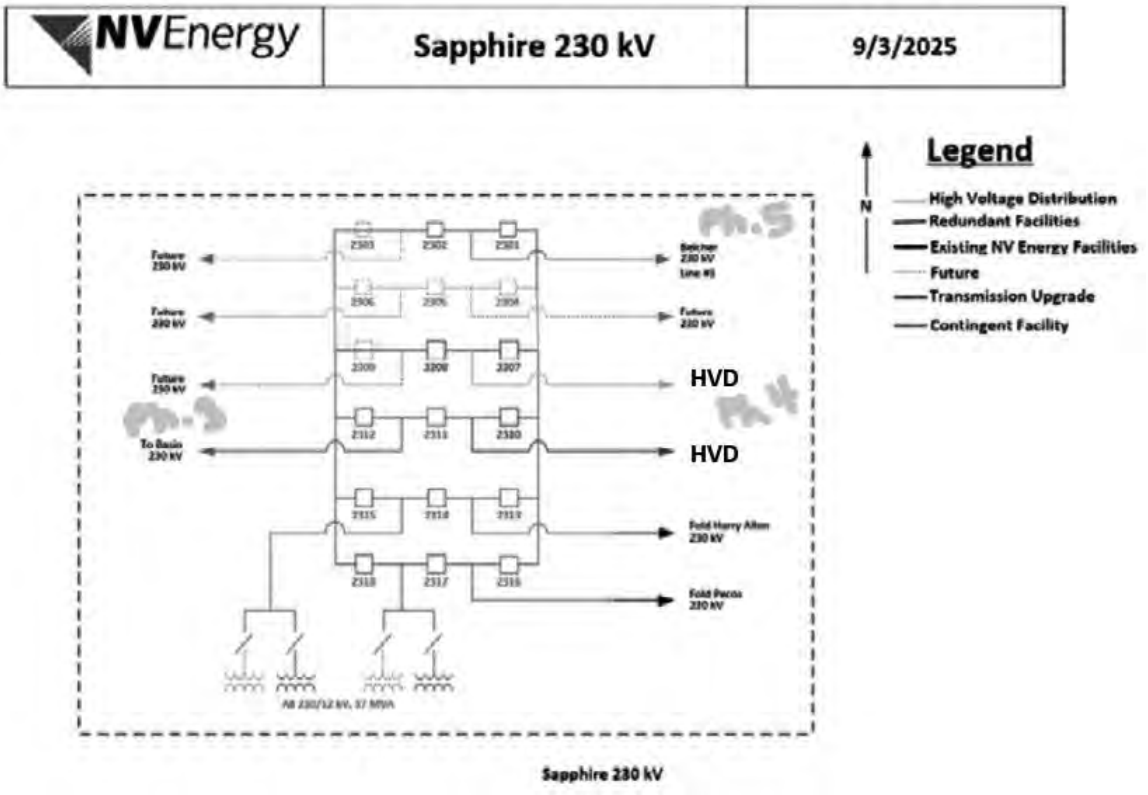

Budget and Cost Responsibility: The Master Planned Community developer (signed in 2023) has provided security for the Utility investment of the construction of Sapphire phase 1. The HVD customers will provide the funding as an ASTPR for the Utility investment for phase 2, phase 3, phase 4 and phase 5.

FIGURE TP-21
PROJECTED CASH FLOWS FOR SAPPHIRE 230/12 KV SUBSTATION

Cash Flow ($MM)						
Project Total	**Pre-2027**	2027	2028	2029	**3 Year Total**	**Post 2029**
53.51	**10.10**	26.03	1.98	2.00	**30.01**	**13.4**

BASIN 525/230 KV SUBSTATION

Basin substation is required to serve a Rule 9 customer with a signed for an additional 500 MW HVD agreement for a total of 1,000 MW, to be served from Basin substation by two (2) 230 kV HVD lines. Basin substation is located near the Sapphire substation in the Apex area. Basin will be connected to the existing transmission system by folding the Silver Hawk – Harry Allen 525 kV line, addition of 525/230 kV 1,500 MVA transformer and re-termination of the previously discussed HVD line from Sapphire into Basin, creating the new Basin – Sapphire 230 kV line. The Companies request approval to construct the Basin substation, including the line fold of the existing Silver Hawk – Harry Allen 525 kV line, 525/230 kV 1,500 MVA transformer and the two (2) HVD lines, considered Basin phase 1.

A second Rule 9 agreement for 855 MW is expected to be executed before the PUCN issues a ruling on the 2026 IRP. The agreement requires a second 525/230 kV 1,500 MVA transformer at Basin. This customer will take delivery from the two HVD lines that are described in Sapphire phase 4. The Companies request approval to construct the second 525/230 kV 1,500 MVA transformer at Basin, considered Basin phase 2.

Construction Scope: Construct new Basin substation by folding Silver Hawk – Harry Allen 525 kV line. Construct a 525 kV and 230 kV ring buses, with two (2) 525/230 kV 1,500 MVA transformer banks, and a line position for the re-termination of the 230 kV HVD line for the Basin – Sapphire 230 kV line(s), new HVD line terminals, with all the associated line disconnect switches, breakers, bus work, control house protection panels, communications, two HVD 230 kV lines and control equipment.

FIGURE TP-22
ONE LINE DIAGRAM OF BASIN PHASE 1

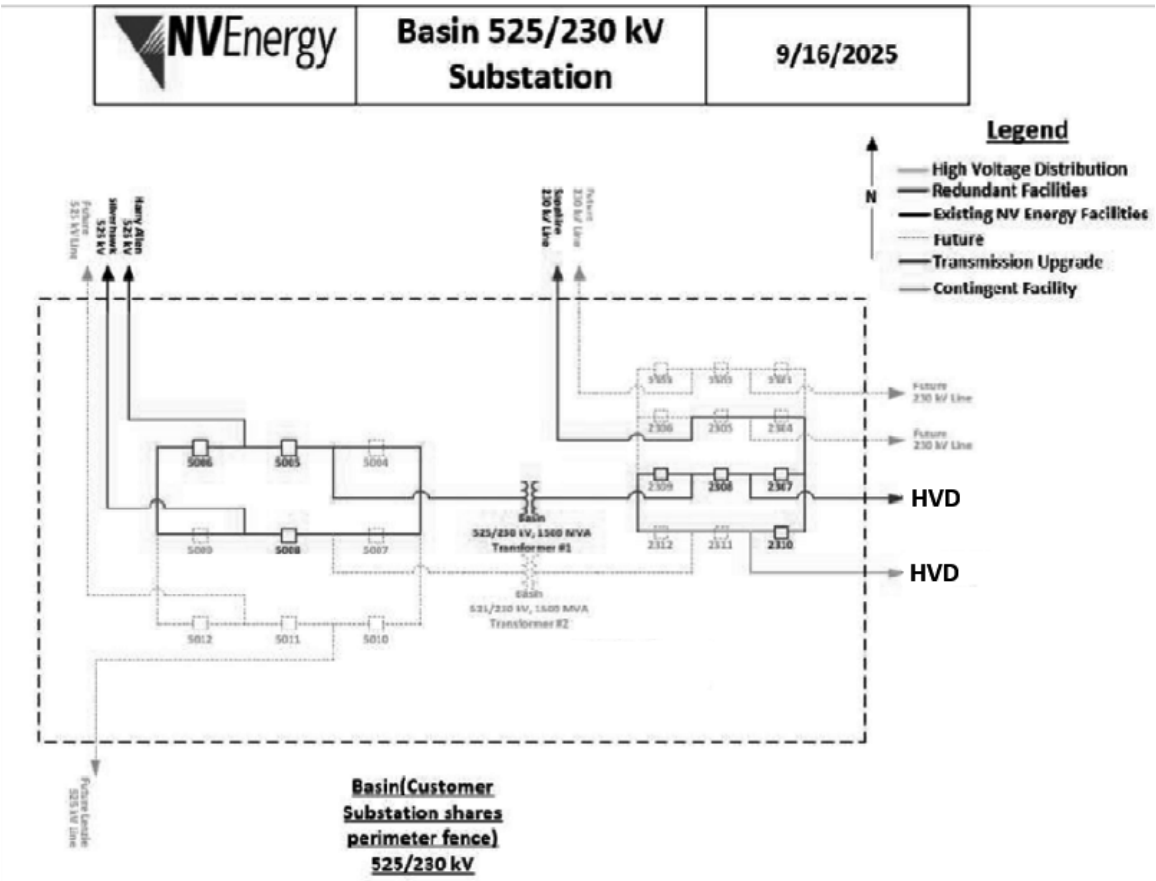

FIGURE TP-23
ONE LINE DIAGRAM OF BASIN PHASE 2

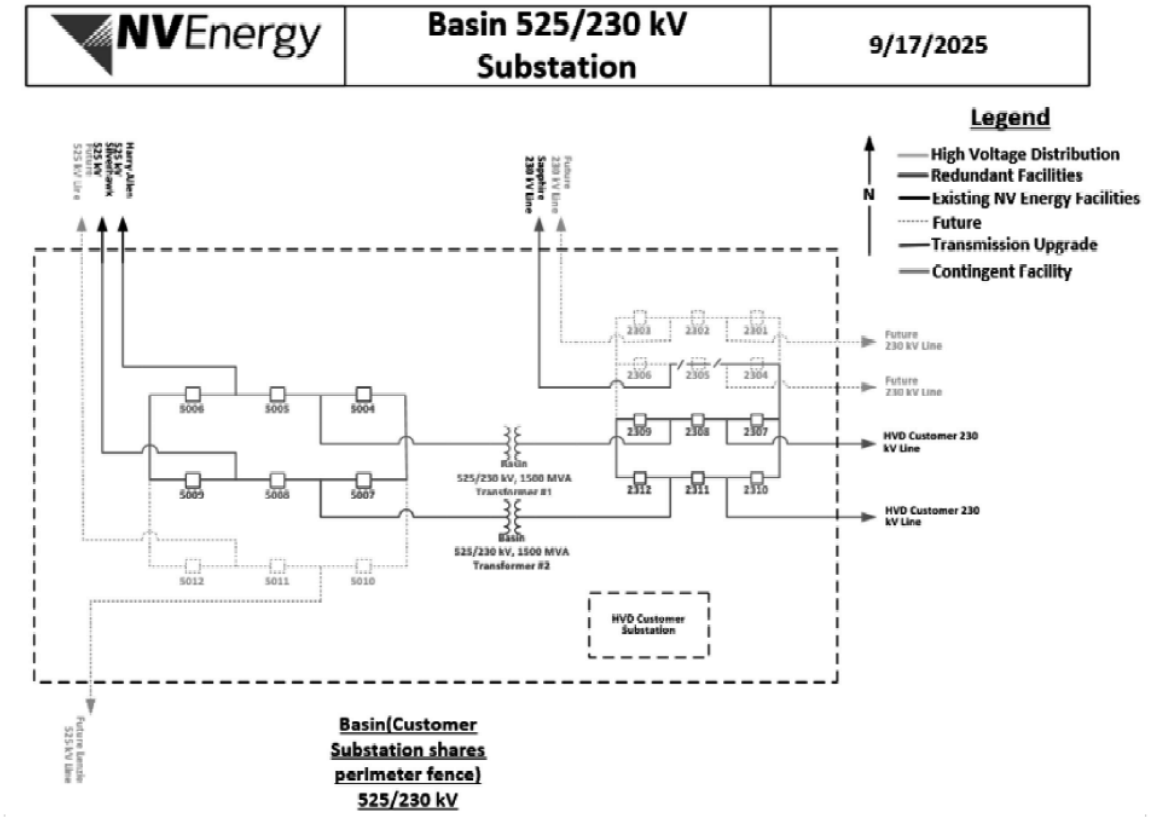

Budget and Cost Responsibility: The customers have provided funding as an ASTPR for the construction of Basin substation.

FIGURE TP-24
PROJECTED CASH FLOWS FOR BASIN SUBSTATION

Cash Flow ($MM)						
Project Total	**Pre-2027**	2027	2028	2029	**3 Year Total**	**Post 2029**
163.60	**16.00**	10.00	8.50	46.10	**64.60**	**83.00**

SAND DUNE 230 KV SWITCHING STATION

South of the Apex area, a fold of the Harry Allen – Pecos 230 kV line #2 into the new Sand Dune switching station is required to serve a Rule 9 customer with a signed 550 MW HVD agreement. The addition of this load causes overloads on the Harry Allen – Pecos #1 230 kV line so that the existing line from Harry Allen to Sand Dune must be reconductored to bundled 1026 ACCC. The

Companies request approval to construct the Sand Dune switching station and reconductor a portion of the Harry Allen – Pecos 230 kV line #1 and two HVD 230 kV lines, considered Sand Dune phase 1.

A second Rule 9 agreement for 340 MW has been executed, requiring a 230 kV terminal as well as the reconductor of a portion of the existing Harry Allen – Pecos #1 230 kV line, from Sand Dune to Pecos must be reconductored to bundled 1026 ACCC. The addition of two (2) stage voltage controlled 48 MVAR capacitors are necessary to maintain transmission system voltage. The Companies request approval to construct a 230 kV terminal at Sand Dune switching station, reconductor a portion of the Harry Allen – Pecos 230 kV line #1 and one HVD 230 kV line, considered Sand Dune phase 2.

A third customer Rule 9 agreement for 432 MW, which is anticipated to be executed before the PUCN issues a ruling on the 2026 IRP. The customer requires a 230 kV line terminal at Sand Dune to connect the 230 kV line to Navigator switching station, creating Sand Dune-Navigator-HGIII 230 kV line. Navigator is described and requested below. The customer will take delivery from two HVD lines from Navigator switching station, which is described and requested below. The Companies request approval to construct a 230 kV terminal at Sapphire for the Sand Dune – Navigator – HGIII 230 kV line, considered Sand Dune phase 3.

Construction Scope: Construct new Sand Dune switching station by folding Harry Allen-Pecos 230 kV line #1. Sand Dune switching station includes 230 kV breaker and a half bus with associated line disconnect switches, breakers, bus work, control house protection panels, communications, three HVD 230 kV lines and control equipment. Reconductor Harry Allen to Pecos 230 kV line #1 with double bundled 1026 ACCC. Install 230 kV two (2) stage voltage controlled capacitor bank. Construct Sand Dune-Navigator-HGIII 230 kV line with associated 230 kV line terminals at Navigator and HGII and Sand Dune.

FIGURE TP-25
ONE LINE DIAGRAM OF SAND DUNE SWITCHING STATION
PHASE 1 AND PHASE 2

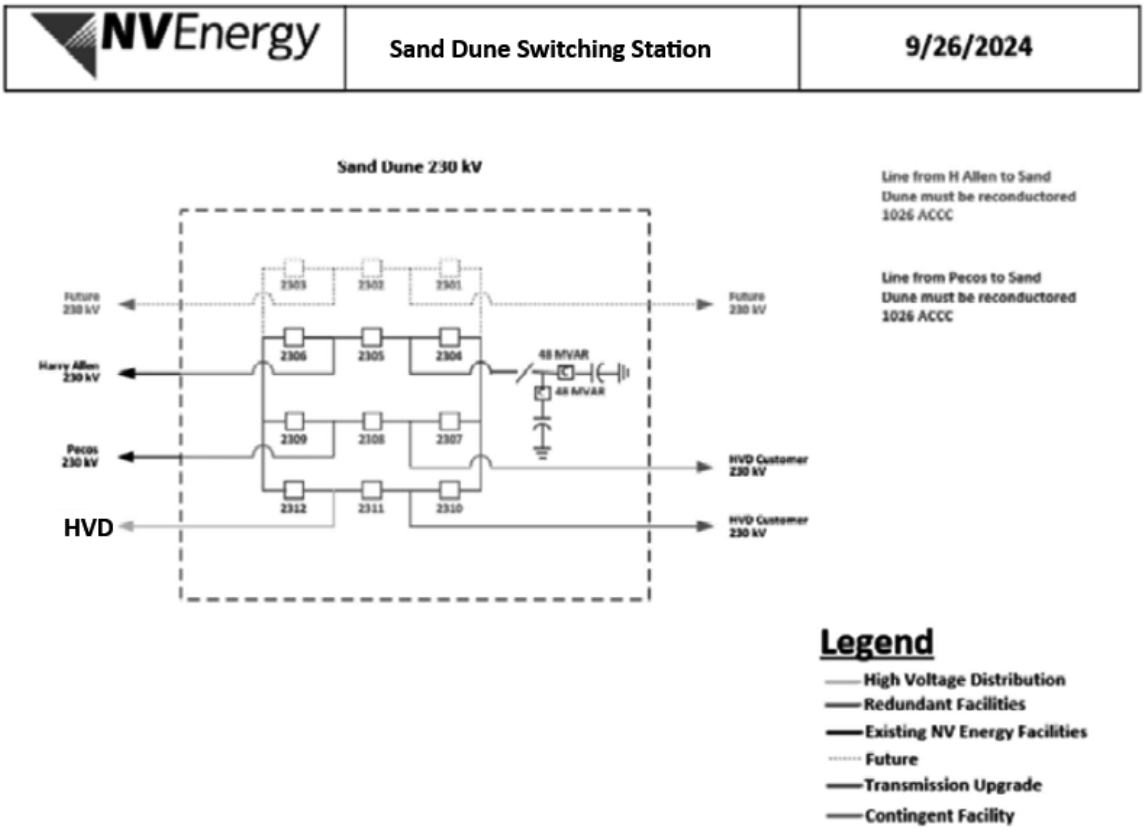

FIGURE TP-26
ONE LINE DIAGRAM SAND DUNE PHASE 3

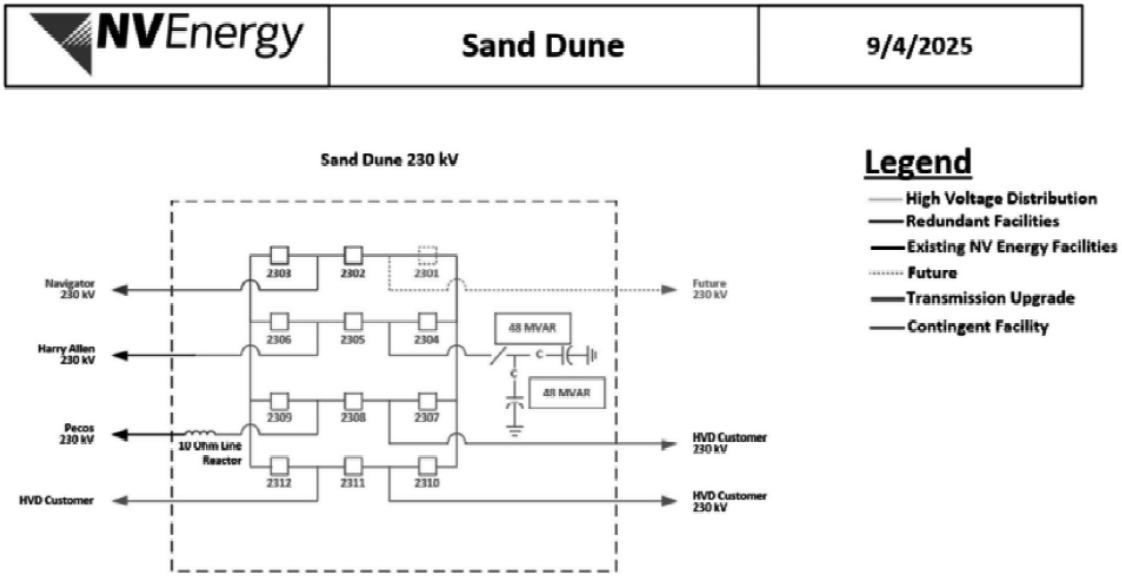

Budget and Cost Responsibility: The customers have provided funding as an ASTPR for the construction of Sand Dune switching station for Phase 1, Phase 2 and Phase 3.

FIGURE TP-27
PROJECTED CASH FLOWS FOR SAND DUNE SWITCHING STATION

Cash Flow ($MM)						
Project Total	**Pre-2027**	2027	2028	2029	**3 Year Total**	**Post 2029**
75.20	**4.00**	4.50	34.60	28.50	**67.60**	**3.60**

OPAL 230 KV SWITCHING STATION

It is now required to construct Opal (originally called Belcher) switching station near Basin substation in Apex. This new switching station is required to serve a Rule 9 customer 375 MW HVD agreement, which is anticipated to be executed before the PUCN issues a ruling on the 2026 IRP. The customer will take redundant power delivery from two (2) 230 kV HVD lines from Opal. Opal will be connected to the existing transmission system by constructing HGIII-Opal-Sapphire 230 kV line. The Companies request approval to construct the Opal switching station, HVD lines and to construct HGIII – Opal – Sapphire 230 kV line.

Construction Scope: Construct the new Opal switching station by first constructing the HGIII-Opal 230 kV line and Opal-Sapphire 230 kV line with associated line disconnect switches, breakers, metering, bus work, control house protection panels, communications, HVD lines and control equipment. This requires a new 230 kV line terminal at HGIII and Sapphire, with associated line disconnect switches, breakers, metering, bus work, control house protection panels, communications, protection and control equipment. The Sapphire 230 kV line terminal to Opal was discussed previously. The HGIII line terminal is discussed below. Opal will be built to accommodate future 230/12 kV 37 MVA transformers and 230 kV transmission needs.

FIGURE TP-28
ONE LINE DIAGRAM OF THE OPAL 230 KV SWITCHING STATION

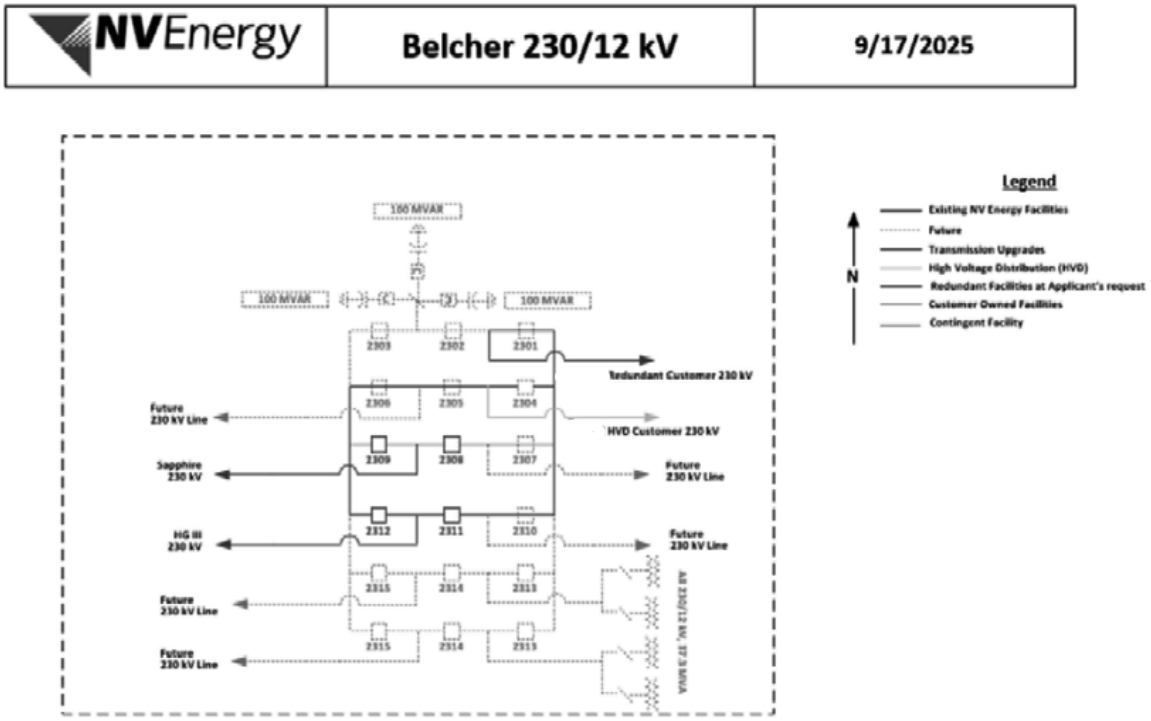

Budget and Cost Responsibility: The customer will have provided funding as an ASTPR for the construction of Opal switching station.

FIGURE TP-29
PROJECTED CASH FLOWS FOR OPAL SUBSTATION

Cash Flow ($MM)						
Project Total	**Pre-2027**	2027	2028	2029	**3 Year Total**	**Post 2029**
61.80	**0.10**	1.20	4.00	10.00	**15.20**	**46.50**

NAVIGATOR 230 KV SWITCHING STATION

The Navigator switching station is required to provide service to a customer with a Rule 9 agreement for 432 MW, which is expected to be executed before the PUCN issues a ruling on the 2026 IRP. The new Navigator 230 kV switching station is located south of HGIII and north of Sand Dune in the Apex area. Navigator will be connected to the 230 kV transmission by constructing HGIII-Navigator-Sand Dune 230 kV line. The additional 230 kV load also requires additional 230 kV transmission capacity be added by constructing the 525/230 kV 600 MVA transformer at HGIII, which also requires the Harry Allen – Chuck Lenzie 525 kV line to be folded into HGIII, which is described and requested below. The Companies request approval to construct the Navigator switching station, HGIII-Navigator-Sand Dune 230 kV line.

Construction Scope: Construct the new Navigator 230 kV switching station, with a line fold of the HGIII-Sand Dune 230 kV line. Construct line terminals with associated line disconnect switches, breakers, bus work, control house protection panels, communications, HVD lines and control equipment.

FIGURE TP-30
ONE LINE DIAGRAM NAVIGATOR 230 KV SWITCHING STATION

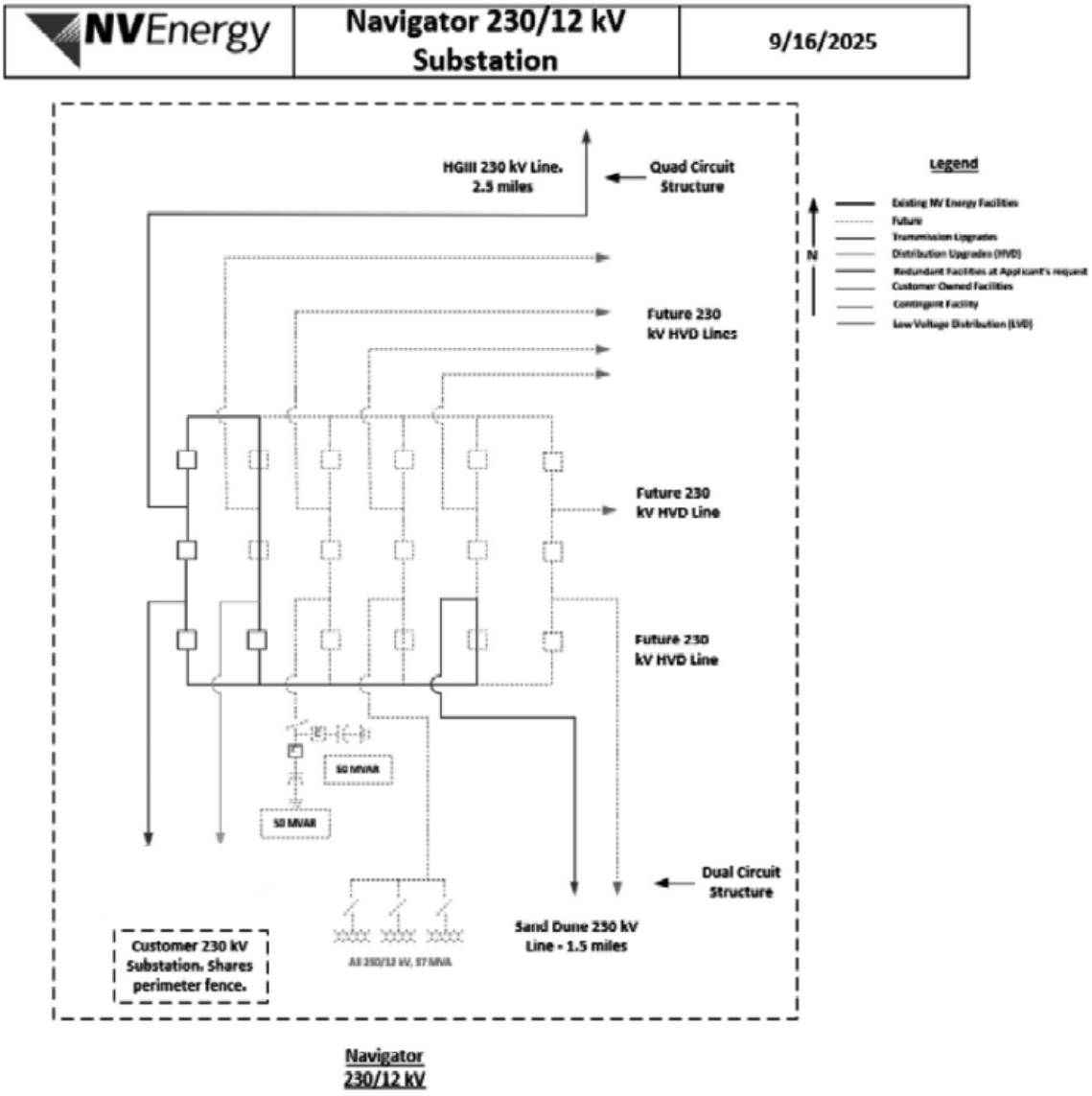

Budget and Cost Responsibility: The customer will provide funding as an ASTPR for the construction of Navigator 230 kV switching station.

FIGURE TP-31
PROJECTED CASH FLOWS FOR NAVIGATOR SWITCHING STATION

Cash Flow ($MM)						
Project Total	**Pre-2027**	2027	2028	2029	**3 Year Total**	**Post 2029**
36.50	**0.50**	5.00	1.00	10.00	**16.00**	**20.00**

HGIII SUBSTATION 525/230 KV 600 MVA TRANSFORMER

A Rule 9 agreement for 375 MW (at Opal) which is expected to be executed before the PUCN issues a ruling on the 2026 IRP, which requires the 230 kV line terminals at HGIII for line to Opal. The 230 kV line is a section of the Sapphire-Opal-HGII described in Sapphire phase 5. The Companies request approval to construct a 230 kV line terminal to Opal, considered HGIII phase 1.

A Rule 9 agreements for 432 MW (at Navigator) is expected to be executed before the PUCN issues a ruling on the 2026 IRP, requiring a 230 kV line terminals at HGIII, line fold of Harry Allen – Chuck Lenzi 525 kV line into HGIII and a new 525/230 kV 600 MVA transformer at HGIII. The 230 kV line is a section of the Sand Dune-Navigator-HGIII 230 kV line described above. The Companies request approval to construct a 230 kV line terminal to Navigator, a 230 kV line terminal to Navigator, the 525/230 kV 600 MVA transformer at HGIII and Harry Allen-Chuck Lenzi 525 kV line fold into HGIII, considered HGIII phase 2.

Construction Scope: Construct the Harry Allen-Chuck Lenzi 525 kV line fold into HGIII, with 525 kV ring bus, with 525/230 kV 600 MVA transformer, two 230 kV line terminals, the 230 kV line to Navigator and 230 kV line to Opal, with associated line disconnect switches, breakers, metering, bus work, control house protection panels, communications, HVD lines and control equipment.

FIGURE TP-32
ONE LINE DIAGRAM HGIII FOR THE NAVIGATOR 230 KV LINE TERMINALS AND 525/230 KV 600 MVA TRANSFORMER

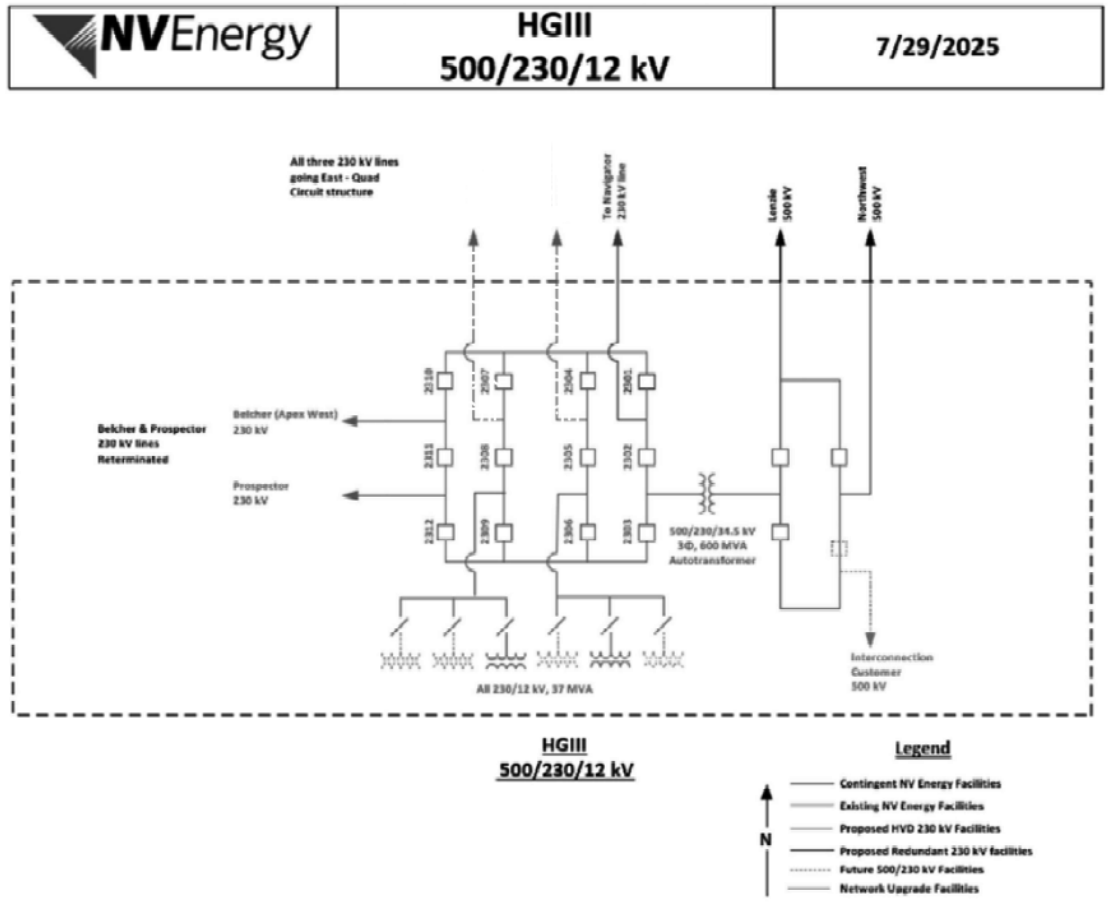

Budget and Cost Responsibility: The customers will provide funding as an ASTPR for the additions at HGIII substation.

FIGURE TP-33
PROJECTED CASH FLOWS FOR HGIII SUBSTATION
TWO (2) 230 KV LINE TERMINALS, 525/230 KV 600 MVA TRANSFORMERS

Cash Flow ($MM)						
Project Total	**Pre-2027**	2027	2028	2029	**3 Year Total**	**Post 2029**
130.00	**12.00**	8.00	6.00	36.00	**50.00**	**68.00**

CHUKAR 345/120 KV 280 MVA TRANSFORMERS #1 AND 345/120 KV 400 MVA TRANSFORMER #2

It is now required to install the previously master planned Chukar 345/120 kV 400 MVA transformers #1 and #2, which are contingent facilities for a Network Integrated Transmission Service (NITS) customer, for the Naniwa, 600 MW, Designated Network Resource (DNR), Point Of Receipt (POR) at East Tracy 345 kV. The Companies DNR request for Hot Pot and Iron Point 600 MW at North Valmy also require the Chukar 345/120 kV transformer additions which are contingent facilities. The Companies DNR request for the Ft Churchill natural gas generation DNR for 1,223 MW, at its Walker River 345 kV point of interconnection, requires the Chukar 345/120 kV 400 MVA transformer additions as contingent facilities. Chukar 345/120 kV transformers were initially required to serve the current 120 kV Rule 9 HVD agreement load forecasts in the next five years. Both of the Chukar 345/120 kV 400 MVA transformers are contingent facilities for an executed Rule 9 agreement for 315 MW. It has been identified that the previously planned 280 MVA transformers will ultimately not be sufficient, to prevent the need to replace the transformers 400 MVA transformers will be used. The 345kV transmission system will be connected to Chukar by folding Lantern – Comstock Meadows 345 kV line. The Companies request approval to construct the Chukar 345/120 kV 400 MVA transformer #1 and 345/120 kV 400 MVA transformer #2.

Construction Scope: Construct the Chukar 345/120 kV transformers #1 and #2, construct the Comstock Meadows – Chukar line section of Lantern – Comstock Meadows 345 kV line. Construct a four (4) 345 kV breaker ring bus convertible to breaker and a half, with associated line disconnect switches, breakers, bus work, control house protection panels, communications and control equipment.

FIGURE TP-34
ONE LINE DIAGRAM OF THE CHUKAR SUBSTATION

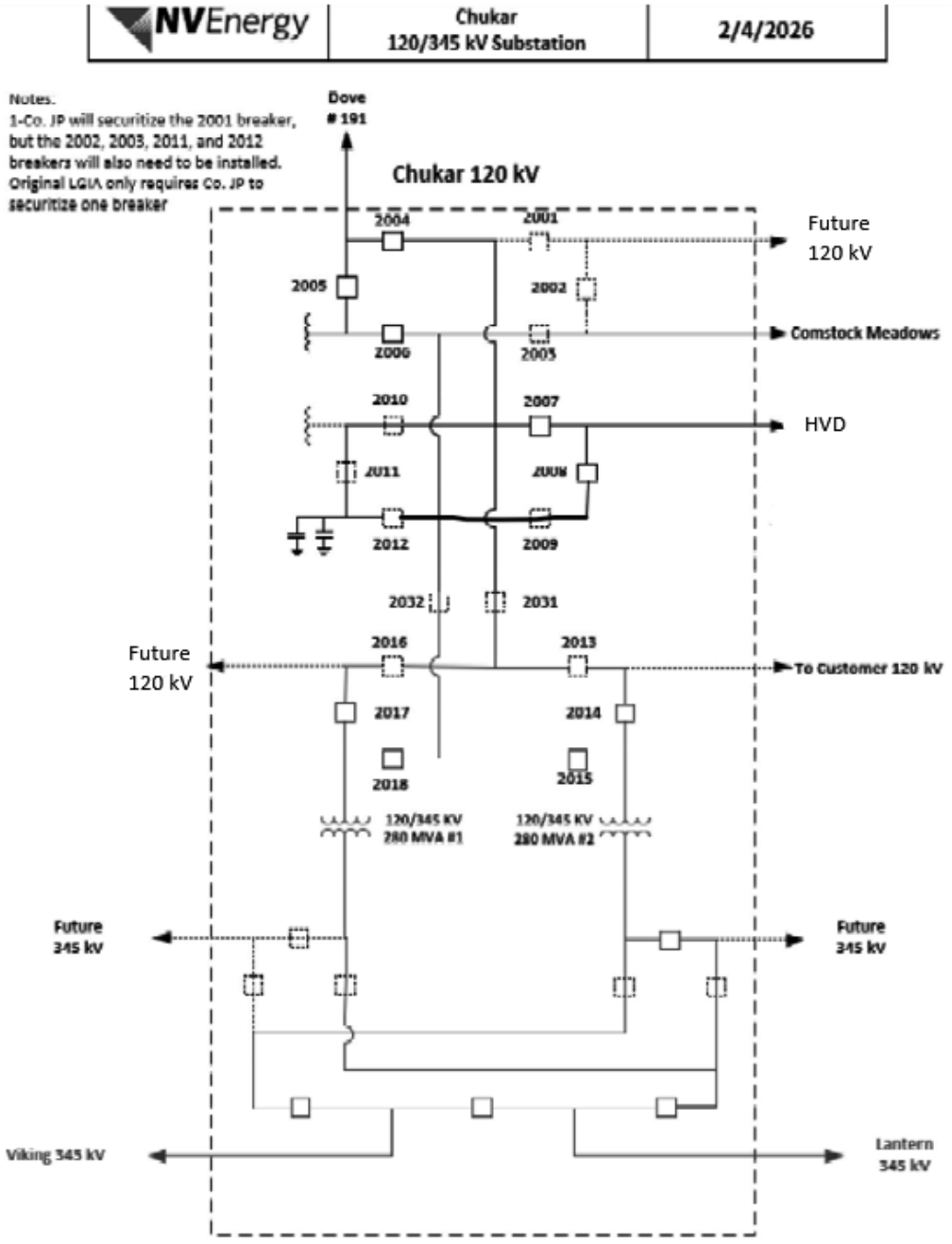

Budget and Cost Responsibility: The Companies will be responsible for the cost associated with the addition of the 345/120 kV transformer(s) at Chukar substation.

FIGURE TP-35
PROJECTED CASH FLOWS FOR
CHUKAR 345/120 KV 400 MVA TRANSFORMER #1 & #2

Cash Flow ($MM)						
Project Total	**Pre-2027**	2027	2028	2029	**3 Year Total**	**Post 2029**
83.90	**3.00**	2.80	31.80	46.10	**80.70**	**0.20**

VIKING 345 KV SWITCHING STATION

The new Viking switching station will be connected to the 345 kV system by folding the Lantern – Comstock 345 kV line and is required to serve a Rule 9 customer with a signed HVD agreement for 461 MW. The Companies request approval to construct the Viking switching station and HVD lines.

Construction Scope: Construct the new Viking switching station with a line fold of the Lantern – Comstock Meadows 345 kV line. Construct line terminals at Viking switching station with associated line disconnect switches, breakers, bus work, control house, protection panels, communications, HVD lines and control equipment.

FIGURE TP-36
FUTURE ONE LINE DIAGRAM OF THE AREA
WITH VIKING SWITCHING STATION

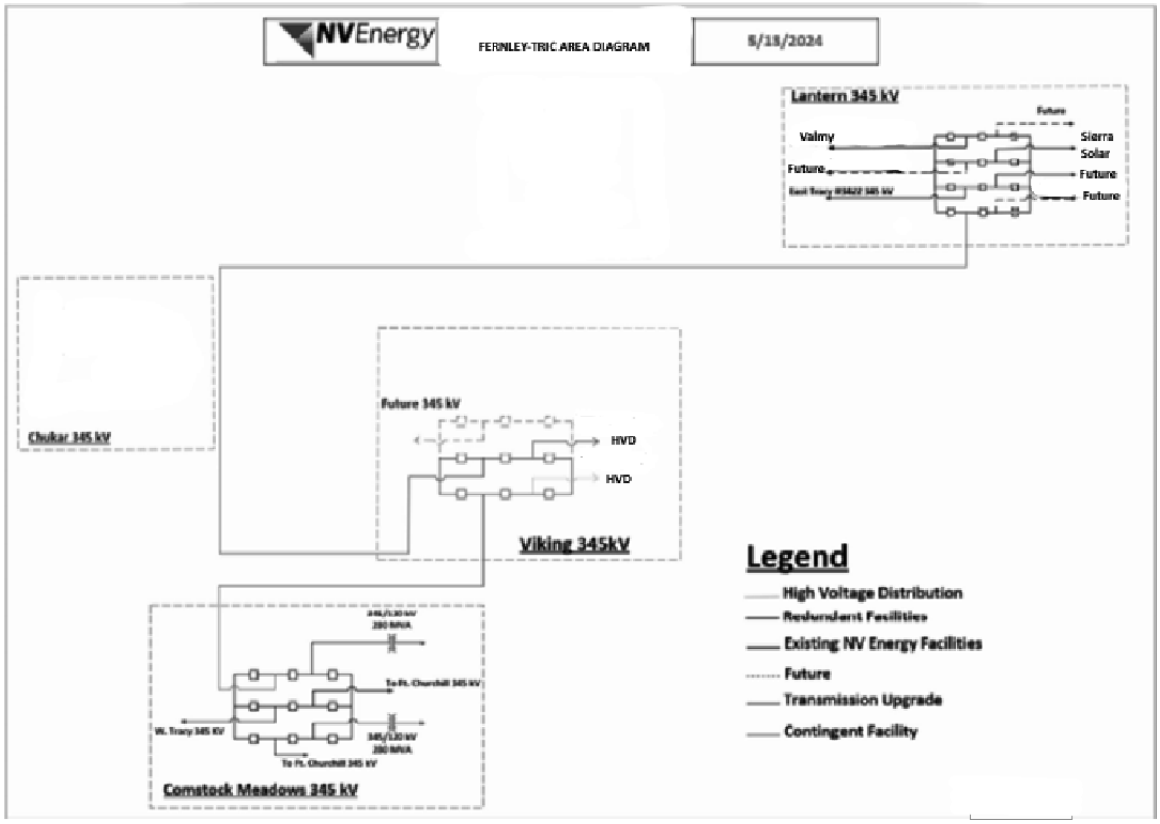

Budget and Cost Responsibility: The customer has provided funding as an ASTPR for the construction of Viking switching station.

FIGURE TP-37
PROJECTED CASH FLOWS FOR VIKING SWITCHING STATION

Cash Flow ($MM)						
Project Total	**Pre-2027**	2027	2028	2029	**3 Year Total**	**Post 2029**
16.80	**1.0**	2.0	2.5	6.6	**11.10**	**4.70**

VAQUERO 345/120 KV SUBSTATION

The new Vaquero 345/120 kV substation is incorporated into the area transmission master plan with service to a customer with a Rule 9 agreement for 461 MW, which is expected to be executed before the PUCN issues a ruling on the 2026 IRP. The customer will take service from 120 kV HVD lines which will require the construction of two (2) 345/120 kV 280 MVA transformers, 345 kV ring bus and 120 kV breaker and a half bus. This large load will require the Lantern – Comstock Meadows 345 kV line to be folded into the new Vaquero 345 substation. The Vaquero location is located in Fernly; Vaquero's construction opens up the ability to serve additional loads in the area on the 120 kV transmission system. The Companies request approval to construct the line fold of Lantern-Comstock 345 kV line into Vaquero substation, with the 345/120 kV 280 MVA transformers and HVD lines.

Construction Scope: Construct the new Vaquero 345 substation to deliver 120 kV to the HVD customer, with a line fold of the Lantern – Comstock Meadows 345 kV line into Vaquero substation. Construct two 345/120 kV 280 MVA transformers, line terminals with associated line disconnect switches, breakers, bus work, control house protection panels, communications, HVD lines and control equipment.

FIGURE TP-38
ONE LINE DIAGRAM OF THE AREA
WITH VAQUERO SUBSTATION

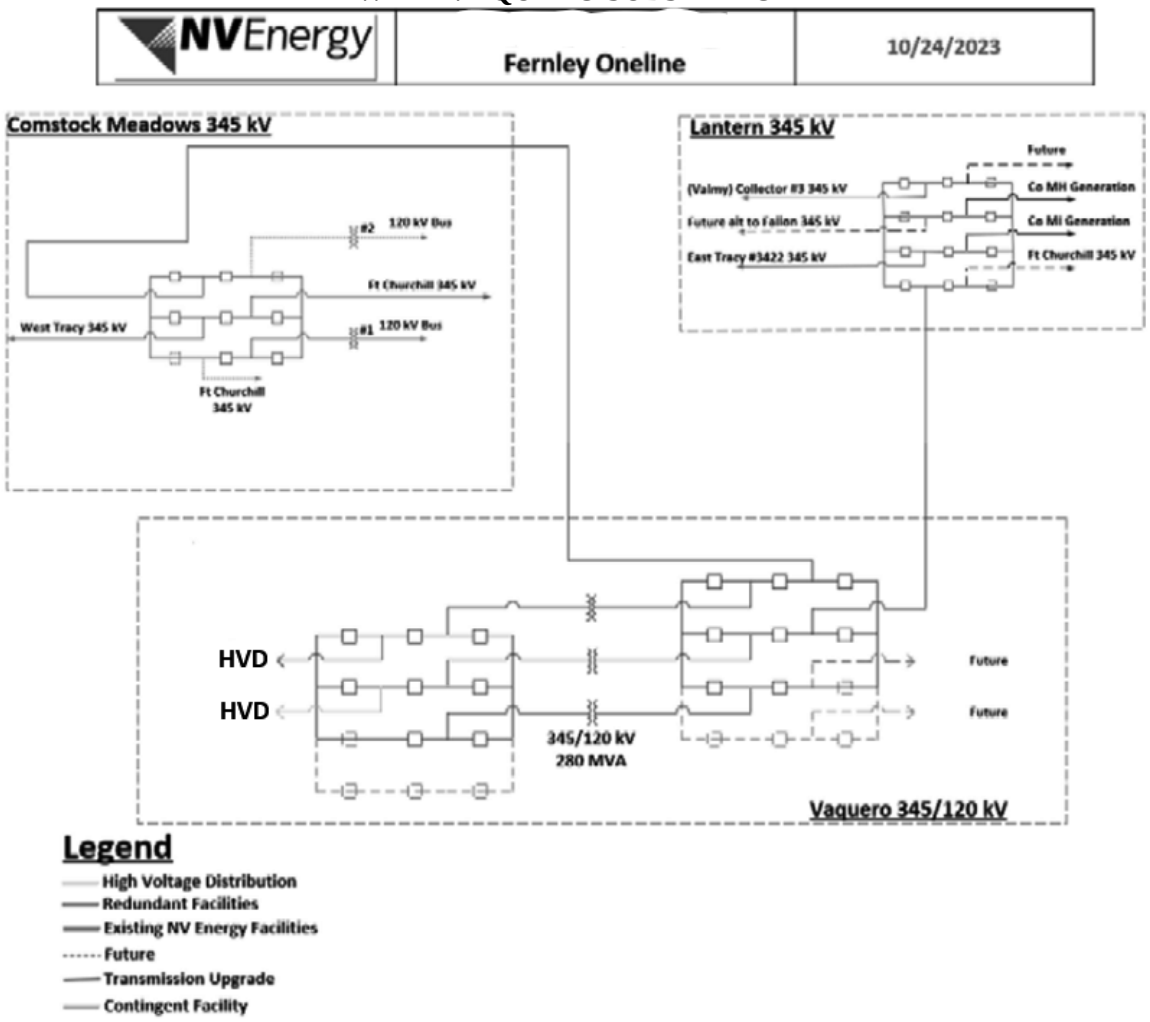

Budget and Cost Responsibility: The customer has provided funding as an ASTPR for the construction of Vaquero substation.

FIGURE TP-39
PROJECTED CASH FLOWS FOR VAQUERO SUBSTATION

Cash Flow ($MM)						
Project Total	**Pre-2027**	2027	2028	2029	**3 Year Total**	**Post 2029**
62.00	**11.00**	5.00	7.00	15.00	**27.00**	**24.00**

EAST TRACY 345 KV LINE TERMINALS

It is now required to install two (2) 345 kV line terminals at East Tracy substation. These are required to serve a customer with a Rule 9 agreement for 300 MW, which is anticipated to be executed before the PUCN issues a ruling on the 2026 IRP. The lead time on breakers is now approximately three years. Therefore, it is necessary to order the breakers now. The customer will take delivery from two (2) HVD lines from East Tracy 345 kV bus. The Companies request approval to construct two (2) 345 kV HVD line terminals at East Tracy.

Construction Scope: Construct the two (2) 345 kV line terminals with associated line disconnect switches, breakers, metering, bus work, control house protection panels, communications, HVD lines and control equipment. The customer is responsible for the redundant HVD line costs, including the new line terminal addition.

FIGURE TP-40
ONE LINE DIAGRAM OF THE EAST TRACY SUBSTATION

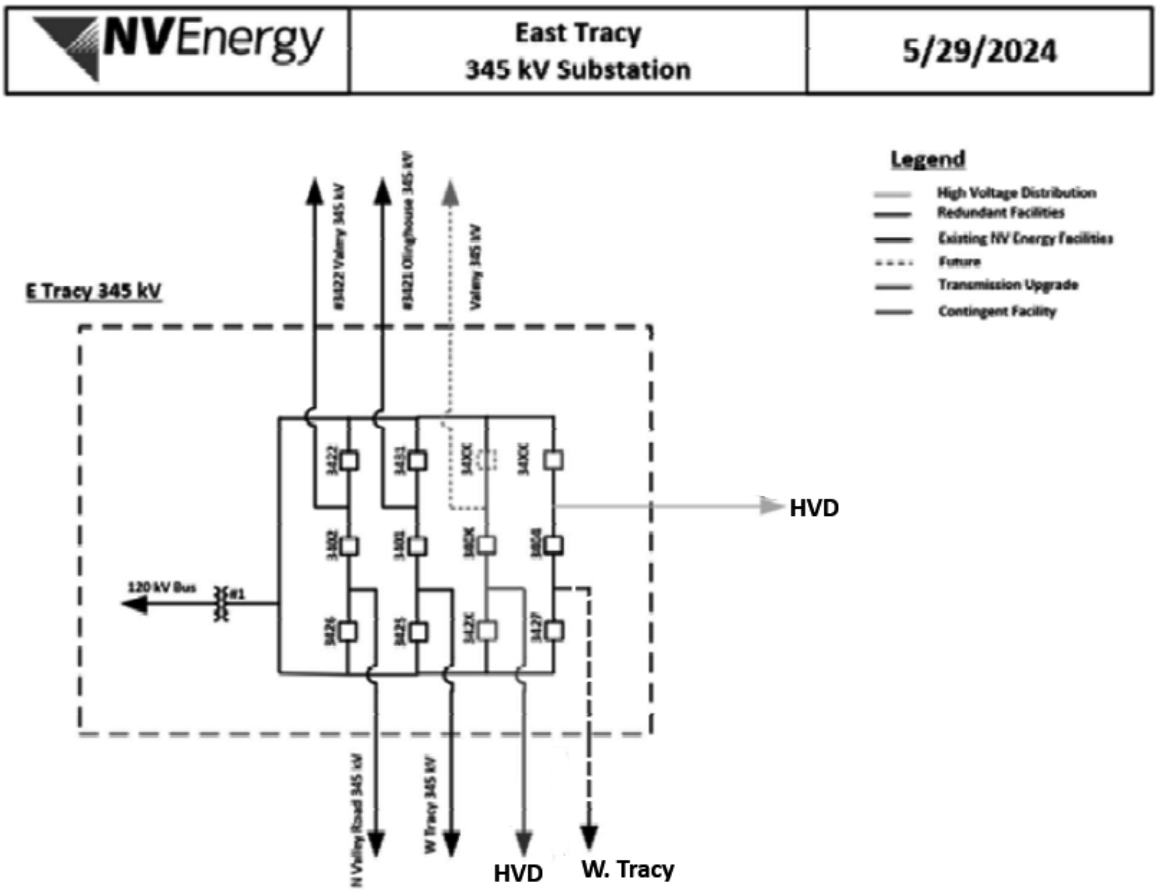

Budget and Cost Responsibility: The customer has provided funding as an ASTPR for the construction of East Tracy line terminals and HVD lines.

FIGURE TP-41
PROJECTED CASH FLOWS FOR
EAST TRACY 345 KV LINE TERMINAL

Cash Flow ($MM)						
Project Total	**Pre-2027**	2027	2028	2029	**3 Year Total**	**Post 2029**
4.30	**0.10**	0.20	2.00	0.00	**2.20**	**2.00**

PETROGLYPH 345 KV SWITCHING STATION

It is now required to install the Petroglyph switching station to serve a new Rule 9 agreement for 450 MW. Petroglyph is connected to the 345 kV system by folding the new West Tracy-Comstock Meadows 345 kV line. The customer will take redundant power delivery from two (2) 345 kV HVD lines from Petroglyph. The Companies request approval to construct the Petroglyph switching station, 345 kV line fold, and HVD lines.

Construction Scope: Construct the Petroglyph switching station by constructing a 345 kV ring bus convertible to breaker and a half with associated line disconnect switches, breakers, metering, bus work, control house, protection panels, communications, HVD lines and control equipment. A fold of the West Tracy - Comstock Meadows 345 kV line will also be required.

FIGURE TP-42
ONE LINE DIAGRAM OF THE PETROGLYPH SWITCHING STATION

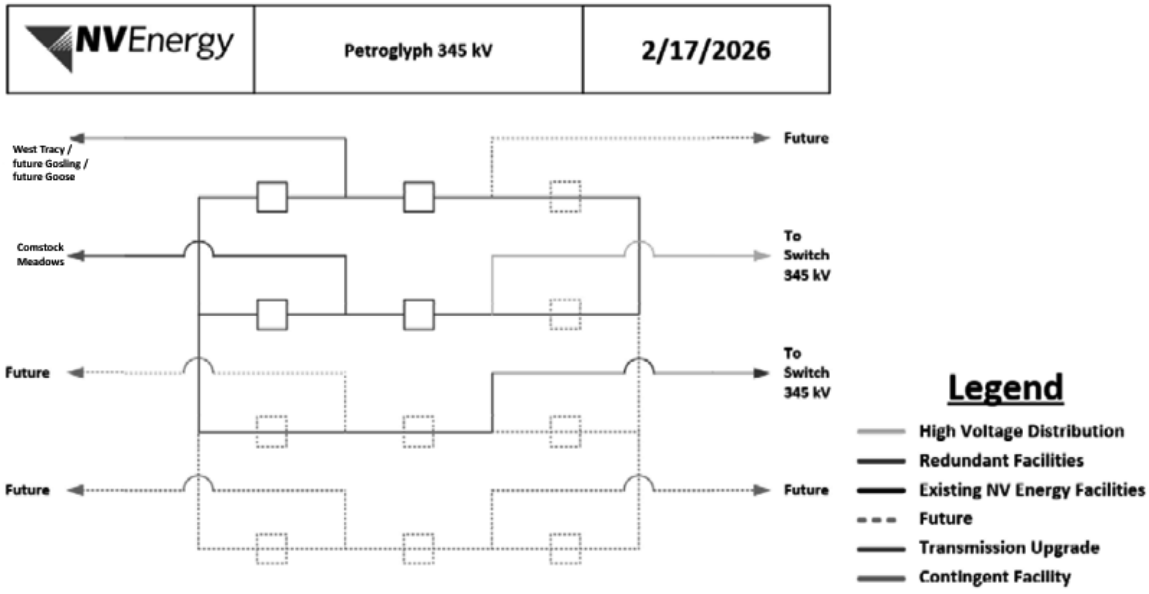

Budget and Cost Responsibility: The customer will provide funding as an ASTPR for the construction of Petroglyph switching station.

FIGURE TP-43
PROJECTED CASH FLOWS FOR PETROGLYPH 345 KV SWITCHING STATION

Cash Flow ($MM)						
Project Total	**Pre-2027**	2027	2028	2029	**3 Year Total**	**Post 2029**
28.80	**8.00**	2.80	8.00	10.00	**20.80**	**0.00**

MALLARD 525/345 KV SUBSTATION

It is now required to install the Mallard 525/345 kV substation. This new substation is required to serve a Rule 9 customers 1050 MW MPC Master Planned Community agreement, and for who's HVD customers are expected to execute their Rule 9 agreements, before the PUCN issues a ruling on the 2026 IRP. To serve this large load and maintain the system voltage limits described in NERC standard for transmission reliability requirements TPL-001-5.1 a shunt capacitor bank with three stages of 200 MVAR, for a total of 600 MVAR, is required (3x200 MVAR) and two (2) 525/345 kV 1,500 MVA transformers. Mallard will be connected to the system by folding the Mackay-Goose 525 kV section of the Walker River-Goose-Mackay-Walker River 525 kV line, which is described below. Alternatively, Mallard could be connected from the Walker River – Grayskull-Mackay-Mallard 525 kV line if necessary. The customer will take redundant power delivery from two (2) 345 kV HVD lines from Mallard. The Companies request approval to construct the Mallard 525/345 kV substation with associated line fold of the Mackay-Goose 525 kV line, two (2) 525/345 kV 1,500 MVA transformers, with three stage voltage switched 600 MVAR shunt capacitor bank and two (2) HVD lines.

Construction Scope: Construct the Mallard 525/345 kV substation by folding the proposed Walker River – Goose – Mackay – Walker River 525 kV line. Mallard will include a 525 kV and 345 kV ring bus convertible to breaker and a half, and two (2) 525/345 kV 1,500 MVA transformer banks, associated line disconnect switches, breakers, metering, shunt capacitors, bus work, control house protection panels, communications, HVD lines and control equipment.

FIGURE TP-44
ONE LINE DIAGRAM OF THE MALLARD SUBSTATION

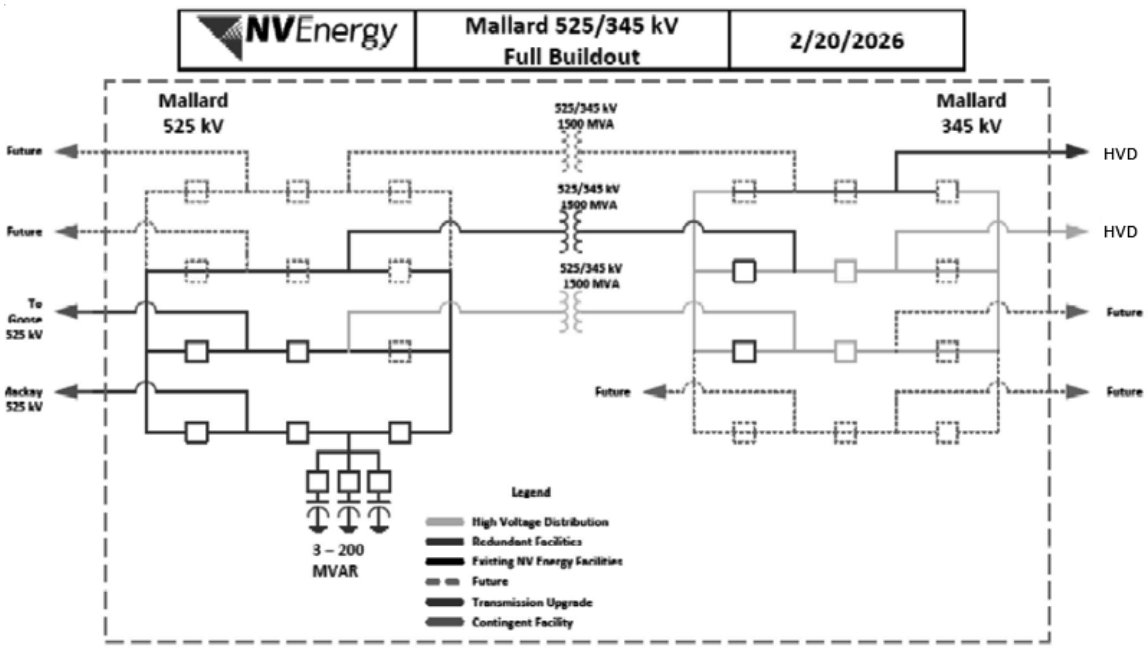

Budget and Cost Responsibility: The customer has provided funding as an ASTPR for the construction of this project.

FIGURE TP-45
PROJECTED CASH FLOWS FOR MALLARD SUBSTATION

Cash Flow ($MM)						
Project Total	**Pre-2027**	2027	2028	2029	**3 Year Total**	**Post 2029**
270.00	**13.00**	18.00	18.00	37.00	**73.00**	**184.00**

GOOSE 525/345 KV SUBSTATION

It is now required to install the Goose 525/345 kV substation. This new substation is required to serve a Rule 9 applicant SHVD agreement for 360 MW, which is expected to be executed before the PUCN issues a ruling on the 2026 IRP. The Goose substation is connected to the 345 kV system by folding the Gosling-Comstock Meadows 345 kV line and the construction of the Walker River-Goose-Mackay-Walker River 525 kV line which is described and requested below. The large load requires a set of two (2) 525/345 kV 1,500 MVA transformers banks, and the applicant requires redundant power delivery for future HVD customers via 345 kV HVD lines from Goose. The

Companies request approval to construct the Goose 525/345 kV substation with the 345 kV line fold, two (2) 525/345 kV 1,500 MVA transformer banks, 525 kV ring bus, and 525 kV line terminals.

Construction Scope: Construct the Goose 525/345 kV substation with a breaker and a half configuration for the 525 kV and 345 kV buses. Install two (2) 525/345 kV 1,500 MVA transformers banks with associated line disconnect switches, breakers, bus work, control house, protection panels, communications, and control equipment. A fold of the Gosling - Comstock 345 kV line into Goose, will be required in addition to approximately 90 miles of the new 525 kV line from Walker River – Goose – Mackay – Walker River. New 525 kV terminals at Walker River will also be required.

FIGURE TP-46
ONE LINE DIAGRAM OF THE GOOSE 525/345 KV SUBSTATION

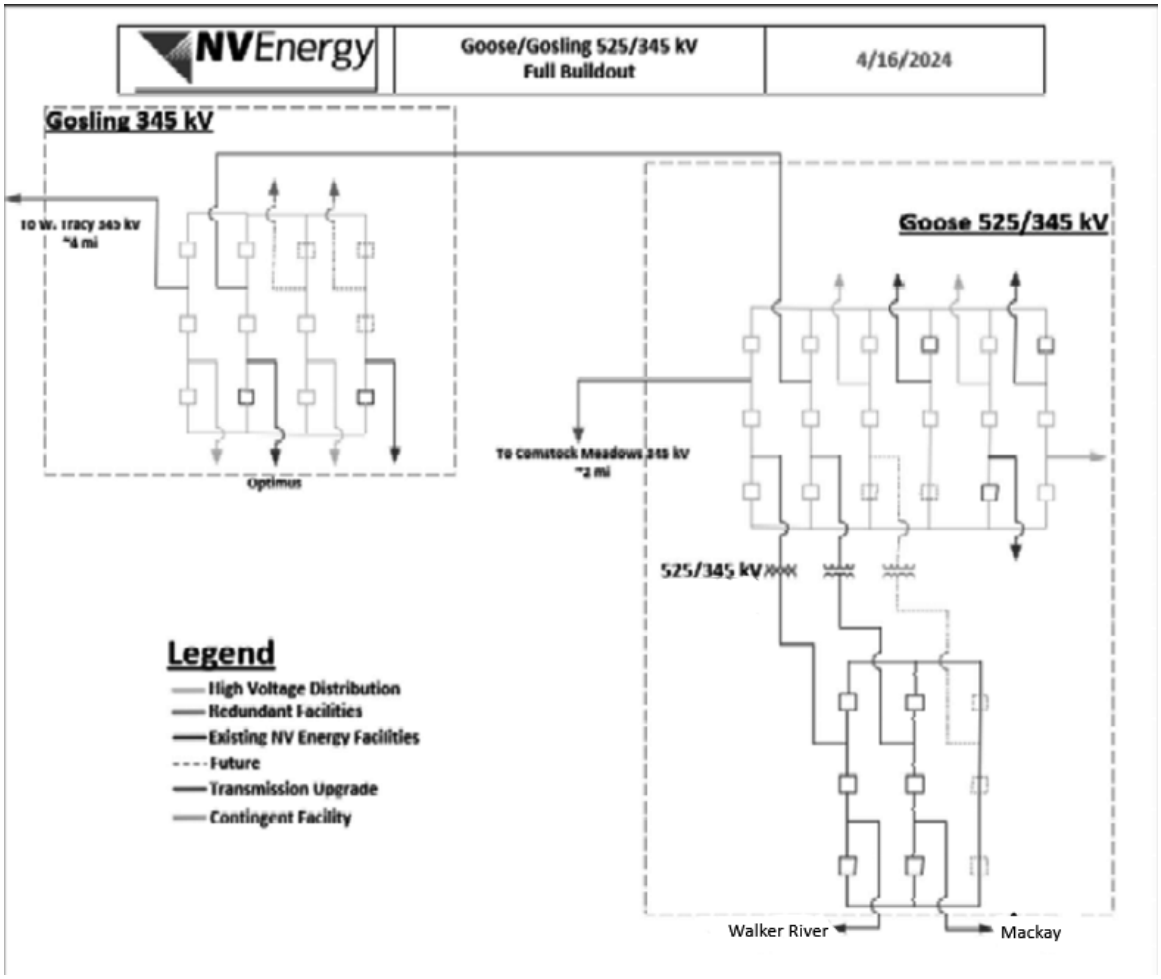

Budget and Cost Responsibility: The customer has provided funding as an ASTPR for the construction of the Goose substation project.

FIGURE TP-47
PROJECTED CASH FLOWS FOR GOOSE SUBSTATION

Cash Flow ($MM)						
Project Total	**Pre-2027**	2027	2028	2029	**3 Year Total**	**Post 2029**
210.00	**13.00**	13.00	13.00	27.00	**53.00**	**144.00**

MACKAY 525/345 KV SUBSTATION

The new Mackay 525/345 kV substation is incorporated into the area transmission master plan. Mackay is required to provide service to a customer with a Rule 9 agreement Master Planned Community (MPC) signed for 1,215 MW, of whose HVD customers are expected to execute their rule 9 agreements prior to the PUCN making a ruling on the 2026 IRP. The Mackay was previously approved and now it is required to construct three (3) 525/345 kV 600 MVA transformers to accommodate the load additions. The need for additional transmission capacity will require the Walker River – Goose – Mackay – Walker River 525 kV lines described below. The Companies request approval to construct the Mackay Substation three (3) 525/345 kV 600 MVA transformers, 525 kV line terminals, and HVD lines.

Construction Scope: Construct the new Mackay substation three (3) 525/345 kV 600 MVA transformers, 345 kV HVD lines. Construct 525 kV and 345 kV line terminals with associated line disconnect switches, breakers, bus work, control house, protection panels, communications, HVD lines and control equipment.

FIGURE TP-48
ONE LINE DIAGRAM OF THE MACKAY SUBSTATION

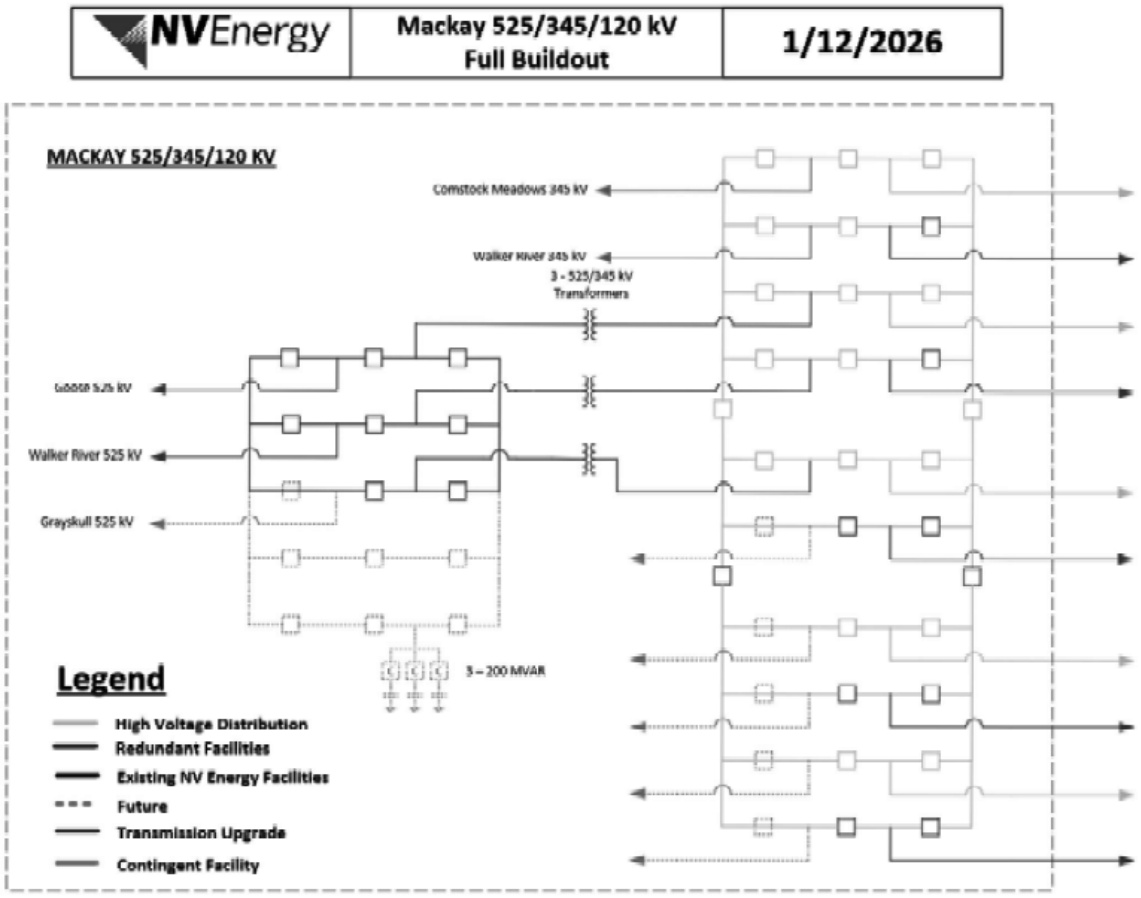

Budget and Cost Responsibility: The customer will have provided funding as an ASTPR for the construction of Mackay substation additions.

FIGURE TP-49
PROJECTED CASH FLOWS FOR MACKAY SUBSTATION

Cash Flow ($MM)						
Project Total	**Pre-2027**	2027	2028	2029	**3 Year Total**	**Post 2029**
170.00	**11.00**	11.00	11.00	22.00	**44.00**	**115.00**

WALKER RIVER – GOOSE – MACKAY – WALKER RIVER 525 KV LINES

The new Mackay and Goose 525/345 kV substations loads are so large that they require redundant 525 kV transmission because the underlying 345 kV system is not sufficient in N-1 scenarios. Mackay and Goose are required to provide service to a customer with a Rule 9 agreement Master Planned Community (MPC), signed for the combined total of 2,025 MW. This large load will require the Walker River – Goose – Mackay – Walker River 525 kV lines be constructed. The Companies request approval to construct the Walker River – Goose – Mackay – Walker River 525 kV lines.

Construction Scope: Construct the new Walker River – Goose – Mackay – Walker River 525 kV lines with line 525 kV line terminals at Walker River. Construct line terminals with associated line disconnect switches, breakers, bus work, control house protection panels, communications, approximately 80 miles of 525 kV lines and control equipment. 43.6 miles from Walker River to Goose, 10 miles from Goose to Mackay and 35 miles from Mackay back to Walker River.

Budget and Cost Responsibility: The customer will have provided funding as an ASTPR for the construction of Walker River – Goose – Mackay – Walker River 525 kV lines.

FIGURE TP-50
PROJECTED CASH FLOWS FOR
WALKER RIVER – GOOSE – MACKAY – WALKER RIVER 525 KV LINES

Cash Flow ($MM)						
Project Total	**Pre-2027**	2027	2028	2029	**3 Year Total**	**Post 2029**
405.00	**25.00**	3.00	6.00	9.00	**18.00**	**362.00**

SPRING CANYON 230/12 KV SUBSTATION

Spring Canyon Substation with three 230/12 kV 37 MVA transformers is required in summer 2028. Spring Canyon 230/12 kV Substation is an area upgrade project to source several Master Planned Community agreements (MPC) in the Eldorado Valley area. The Eldorado Valley is a growing commercial and industrial center in southern Henderson. The Companies have received requests totaling 74.1 MVA for service in Eldorado Valley from warehousing, manufacturing, data centers, and mixed development customers. The Eldorado Valley area is currently being served from the 69/12 kV 88 MVA Mission Substation, which is fully contracted, with no available capacity. Greenway Substation can support approximately 30 MVA of load growth but is eight miles from the proposed Spring Canyon site, which creates an entry barrier for customers due to line extension cost and feeder route permitting time. Active projects justifying construction of Spring Canyon Substation include 3010885444 – Eldorado Industrial, requested in-service date:

November 29, 2024, 5.7 MVA; 3010833586 – Panattoni Eldorado Valley Master Plan, requested in-service date: December 1, 2026, 31.1 MVA; 3010047083 – WDA Innovative Park at Eldorado Master Plan, requested in-service date: December 1, 2026, 37.3 MVA. Two Master Planned Umbrella ("MPU") agreements have been executed. The manufacturers of transformers of this size are quoting a lead time approaching three years. The Companies request approval to construct Spring Canyon 230/12 kV Substation with three (3) 230/12 kV 37 MVA transformers.

Construction Scope: Construct Spring Canyon substation by folding Mead – Greenway 230 kV line, install ring bus and 230/12 kV 280 MVA transformers with associated line disconnect switches, breakers, bus work, control house protection panels, communications, distribution feeders and control equipment.

FIGURE TP-51
ONE LINE SPRING CANYON 230/12 KV SUBSTATION

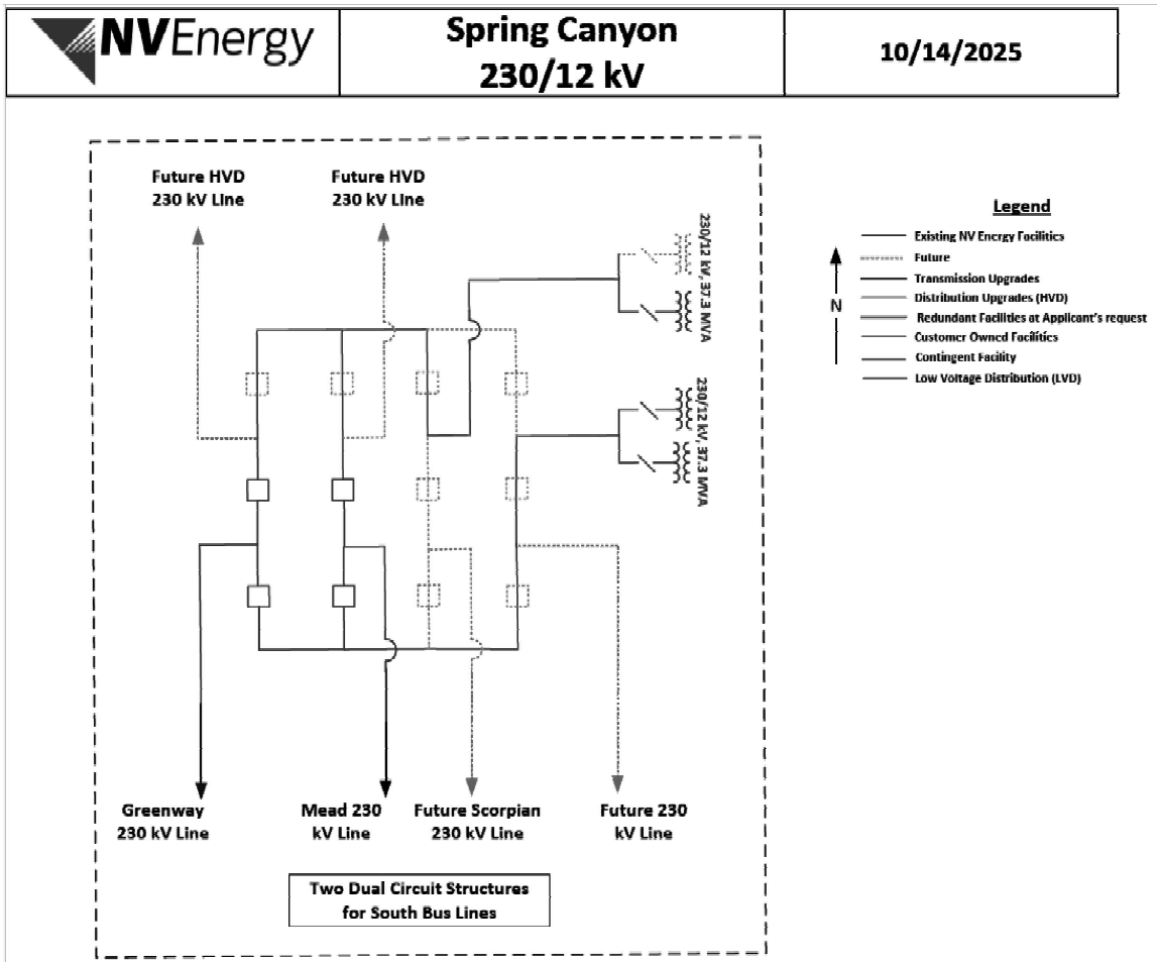

Budget and Cost Responsibility: The Companies will be responsible for the cost associated with the construction of the Spring Canyon 230/12 kV Substation to meet its obligations.

FIGURE TP-52
PROJECTED CASH FLOWS FOR SPRING CANYON 230/12 KV SUBSTATION

Cash Flow ($MM)						
Project Total	**Pre-2027**	2027	2028	2029	**3 Year Total**	**Post 2029**
49.60	**49.5**	0.10	0.00	0.00	**0.10**	**0.00**

SCORPION 230 KV SWITCHING STATION

It is now required to install the Scorpion 345 kV switching station which is required to serve a Rule 9 customer 350 MW HVD agreement, which is expected to be executed before the PUCN issues a ruling on the 2026 IRP. The customer will take redundant power delivery from two (2) 230 kV HVD lines from Scorpion switching station. Scorpion is connected to the 230 kV system by folding the Mead-Arden 230 kV line. The Companies request approval to construct the Scorpion 230 kV switching station.

Construction Scope: Construct the Scorpion 230 kV switching station by constructing a 230 kV ring bus convertible to breaker and a half with associated line disconnect switches, breakers, metering, bus work, control house protection panels, communications, HVD lines and control equipment. Construct line fold of the Mead-Arden 230 kV line into Scorpion 230 kV switching station.

FIGURE TP-53
ONE LINE DIAGRAM OF THE SCORPION 230 KV SWITCHING STATION

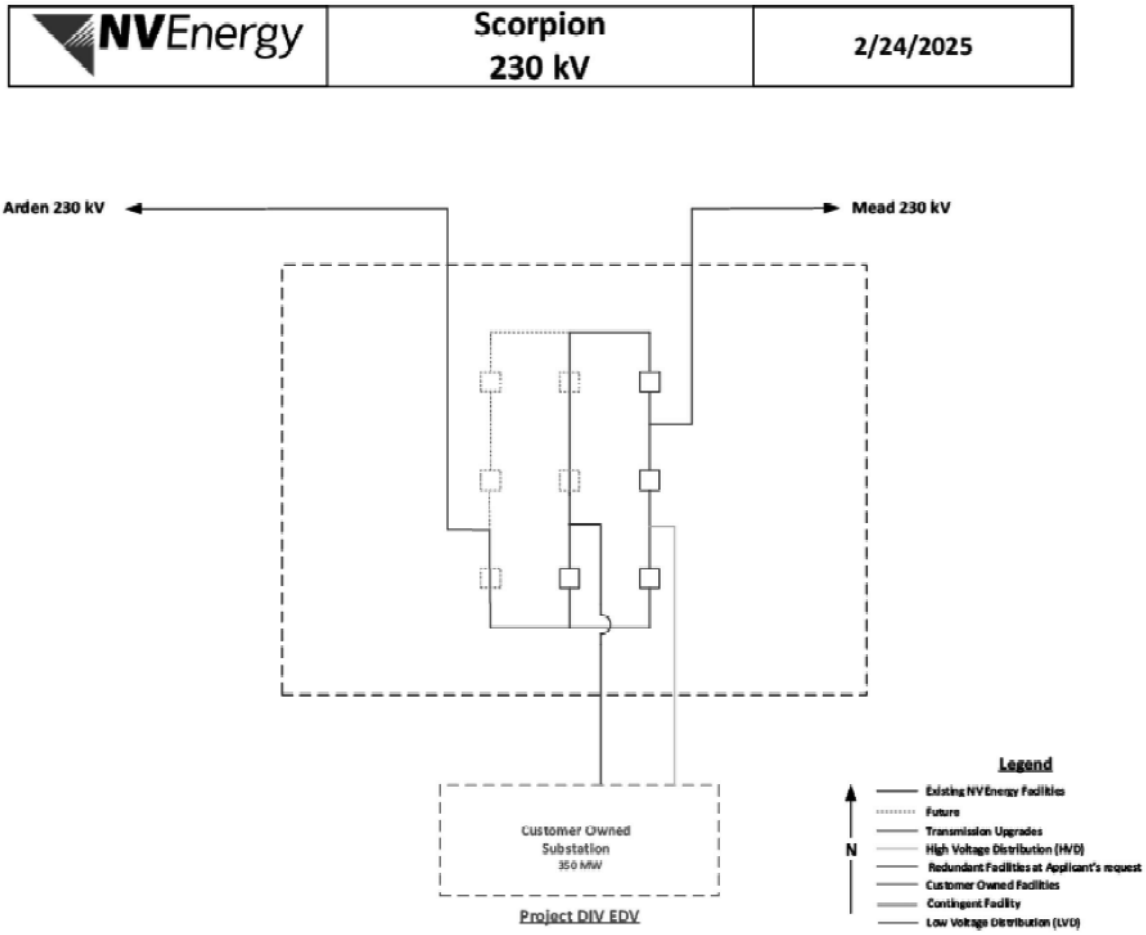

Budget and Cost Responsibility: The customers will provide funding as an ASTPR for the construction of Scorpion 230 kV switching station.

FIGURE TP-54
PROJECTED CASH FLOWS FOR SCORPION 230 KV SWITCHING STATION

Cash Flow ($MM)						
Project Total	**Pre-2027**	2027	2028	2029	**3 Year Total**	**Post 2029**
43.00	**2.00**	7.00	5.00	15.00	**27.00**	**14.00**

FT. SAGE 345 KV LINE TERMINAL

The terms of the executed FERC jurisdictional Transmission Interconnection Agreement (TIA) require the construction of a new 345/69 kV 50 MVA transformer at the existing Ft Sage substation. The transformer will be installed on a new 345 kV terminal and bus inside the existing substation perimeter. Plumas-Sierra Rural Electric Cooperative (PSREC) will operate their system with a normally open between the Companies transmission system and Pacific Gas and Electric (PG&E) transmission system. The normal open significantly reduced the costs because it eliminates the need for a phase shifting transformer that is typical for similar Transmission to Transmission (TIA). The Companies request approval to construct the 345/69 kV 50 MVA transformer and 69 kV line terminal at Ft Sage.

Construction Scope: Install new 345/69 kV 50 MVA transformer with associated protection changes, communications, bus expansion, line breaker, disconnect switches and metering.

FIGURE TP-55
ONE LINE DIAGRAM OF THE
FT SAGE SUBSTATION 345/69 KV 50 MVA TRANSFORMER

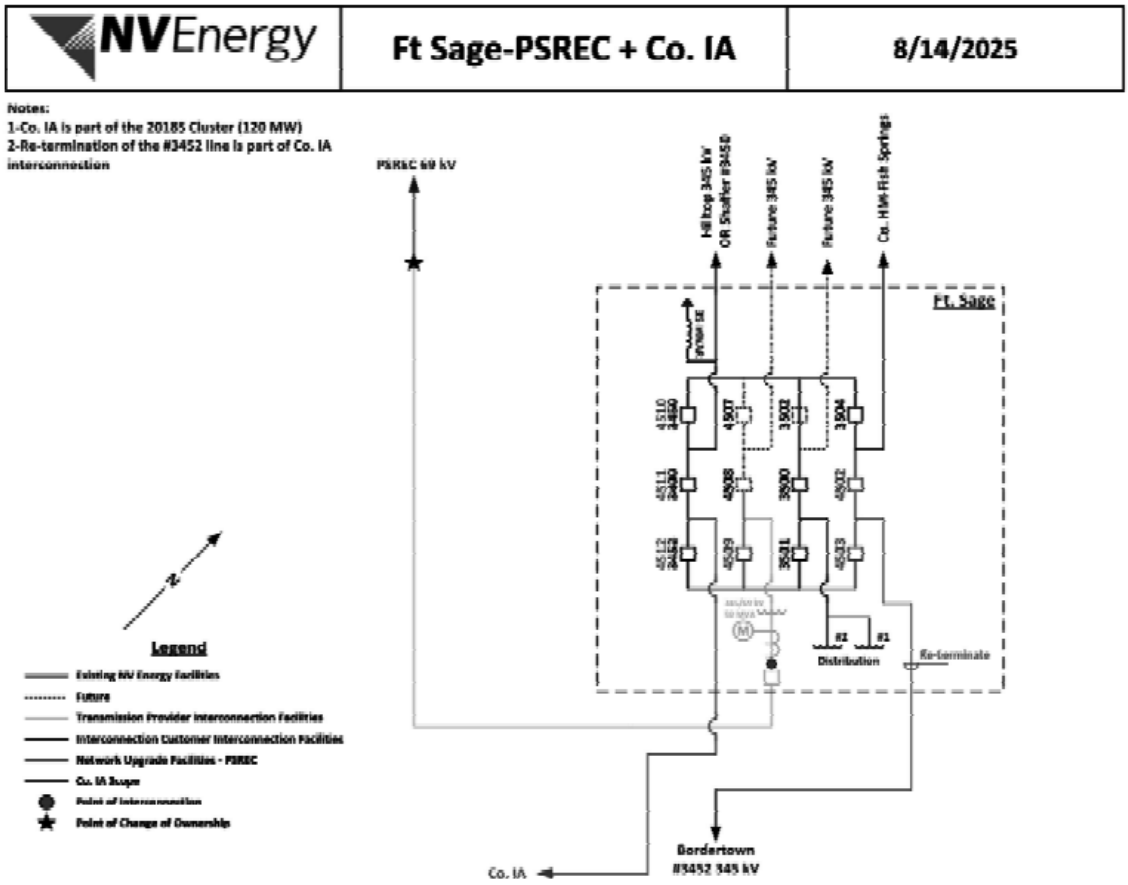

Budget and Cost Responsibility: The PSREC will be responsible for the cost associated with the construction of the new 345/69 kV 50 MVA transformer, as a NITS customer, this would exclude the Companies' network upgrades costs which are with are reflected in the cash flow.

FIGURE TP-56
PROJECTED CASH FLOWS FOR FT SAGE 345/69 KV 50 MVA TRANSFORMER

Cash Flow ($MM)						
Project Total	**Pre-2027**	2027	2028	2029	**3 Year Total**	**Post 2029**
6.90	**0.6**	1.60	4.70	0.00	**6.30**	**0.00**

NORTHWEST 230 KV LINE TERMINAL

The terms of the executed FERC jurisdictional Transmission Interconnection Agreement (TIA) require the construction of an additional 230 kV line terminal at the existing Northwest substation and re-terminating several existing lines to accommodate the paths of incoming lines at Northwest. Once complete, the existing Desert View #1 line and the new Desert View #2 Line will share a bay and center breaker. This project also requires the re-termination of two existing Iron Mountain lines due to location of available bay and the incoming line routes. The Companies request permission to perform the line re-terminations and line terminal construction.

Construction Scope: Install two new breakers to accommodate the re-termination of Iron Mountain #1 line, re-terminate Iron Mountain #2 line, re-terminate existing Desert View #1 Line and interconnect new Desert View #2 line in the other position in that same bay. Make associated protection changes, communications, replace disconnect switches, replace jumpers, and install new metering. There is also related Network Upgrade work that will be required at Leavitt, LV Cogen, Pecos, and Iron Mountain substations as well as fiber runs into Northwest substation to replace existing runs for existing Desert View #1 Line as well as the new Desert View #2 Line.

FIGURE TP-57
ONE LINE DIAGRAM OF THE NORTHWEST 230 KV LINE TERMINALS

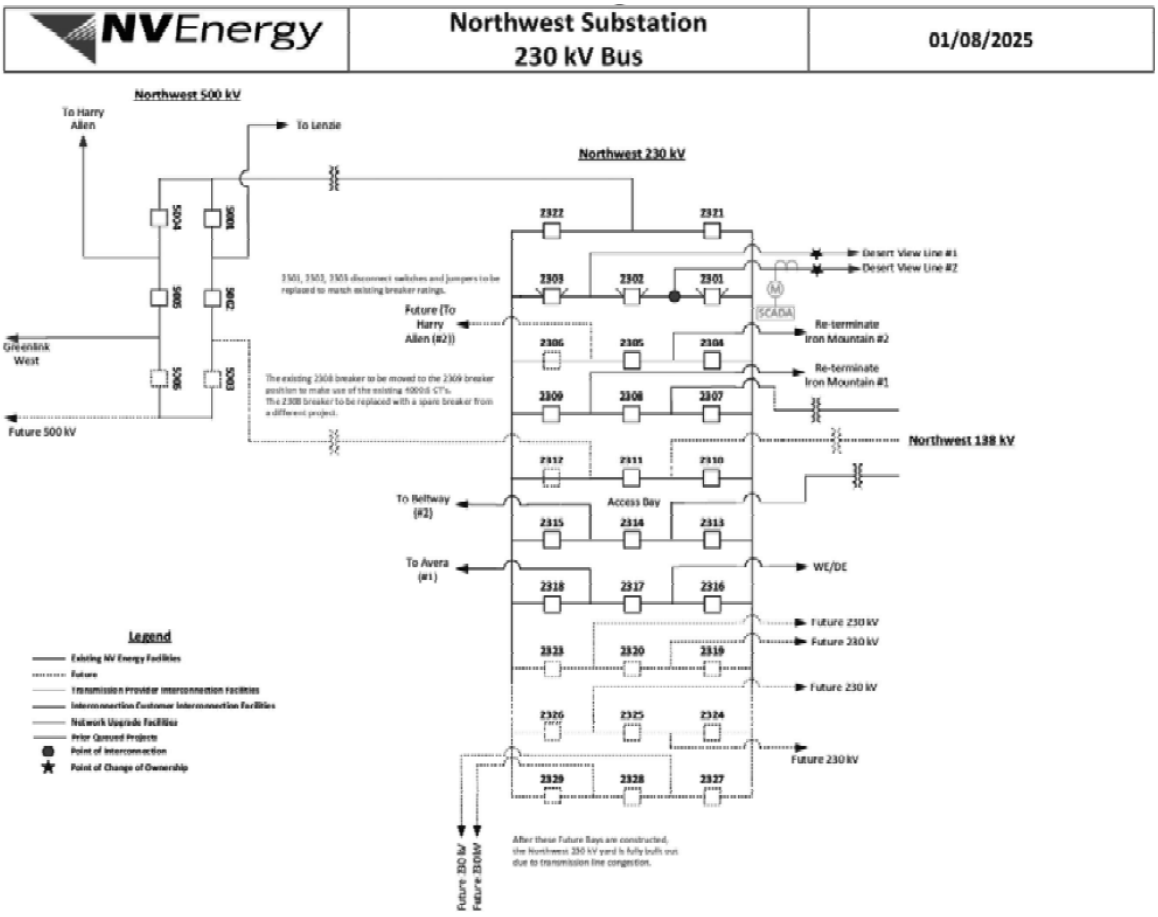

Budget and Cost Responsibility: All costs associated with all work to be done will be paid by the wires to wires interconnection customer, GridLiance West.

FIGURE TP-58
PROJECTED CASH FLOWS FOR NORTHWEST 230 KV LINE TERMINAL

Cash Flow ($MM)						
Project Total	**Pre-2027**	**2027**	**2028**	**2029**	**3 Year Total**	**Post 2029**
0.00	**0.00**	0.00	0.00	0.00	**0.00**	**0.00**