UI
An Avangrid company

UI Metering Diagrams Netting/Buy-All

Residential (<25kW) Class I Generators

Overview

- UI Technical Review and acceptance are required for all Installations.
- Diagrams in this presentation are Metering diagrams, not intended for use as Engineering or Construction diagrams.
- The Documents: “UI Guidebook of Requirements for Electric Service”, and “DER Specific Clarifications to the Guidebook of Requirements for Electric Service” the required metering configuration for new and existing services.
- Distributed Generation (DG) within this document is used interchangeably with Distributed Energy Resources (DER).
- UI will only meter at UI approved voltages.
- UI will install the production meter and revenue meter.
- UI strictly uses Advanced Meter Infrastructure (AMI) meters.
- The main breaker will not be considered as a disconnect for PV. Dedicated AC disconnect(s) for generation must be used.
- Placard or lamicoid must be placed on the Utility Production meter socket with Tariff ID.
- All disconnects must be labeled (i.e., 1 of 2, 2 of 2, etc.)

10.3 Metering Equipment

Table of available metering equipment:

Service Type	Service Voltage	# Phases	# Wires	Service Amperes	# Meter Terminals	Hot/Cold Sequence
Self-Contained Metering (320 A continuous and below)						
Residential/ Commercial	120/240	1	3	100/200/ 400	4	Hot *
Residential/ Commercial	120/208	1	3	100 / 200	5	Hot
Commercial Network	120/208	1	3	100 / 200	5	Cold
Commercial	277/480	1	3	100 / 400	5	Cold
Commercial	120/208	3	4	200 / 400	7	Hot *
Commercial Network	120/208	3	4	200 / 400	7	Cold
Commercial	277/480	3	4	200 / 400	7	Cold
Transformer-Rated Metering						
Residential	120/240	1	3	Above 400	6	Cold
Commercial	120/208	1	3	Above 400	8	Cold
Commercial Network	277/480	3	4	Above 400	13	Cold
Commercial	120/208 277/480	3	4	Above 400	13	Cold
Fire Pump	120/208 277/480	3	4	Any	13	Cold

HOT SEQUENCE: METER-SWITCH-FUSE
COLD SEQUENCE: SWITCH-FUSE-METER
* CLASS 320 METERS USED IN MULTI-METER BANKS MUST BE COLD SEQUENCE

Netting Tariff - Production Meter in Series with Revenue Meter **Partial Backup**

Note 1

- For or Utility meter(s) located inside, the interconnecting customer will be required to upgrade and have the meter(s) relocated outside the customer facility. All meters and switches are required to be grouped unless a written variance is granted by Ul. All requests for a variance must be submitted in writing to indoormeterrequest@uinet.com.

Note 2

- The utility AC disconnect must be located at ground level within 10 ft of the utility revenue meter(s), where utility personnel and first responders have 24/7 access. All fire, electric, building code and bylaws must be followed.

Note 3

- Production meter socket and/or CT compartment must follow the UI Guidebook of Requirements. Revenue/Billing meter socket and/or CT compartment cannot be used as a tie point for DG equipment. Any Meter Socket Adapter (MSA) intended for use must be pre-approved by UI.

Note 4

- Socket must have a lever bypass. Line and load conductors for the production meter cannot be in the same raceway (i.e., trough). When neutral isolation is required, a neutral isolation kit from the same manufacturer of the socket must be used. Splices are not permitted.

Note 5

- The utility is not responsible for customer damages incurred during islanding or solar backup. Customer may need to contract additional insurance policy.
- ~~To utilize ESS and solar array as a backup during grid outage, a dedicated circuit, independent from the production and billing meters, must be used. The production and billing meter cannot be energized during islanding or solar backup.~~
- Automated Grid Isolation is required for islanding or solar backup applications.
- Netting tariff prohibits the use of ESS to re-sell grid energy back to the grid.

Note 6

- Islanding accomplished by multiple isolation devices must be open transition and synchronized, consult with Ul Engineering prior to installation. The production and billing meter cannot be energized during islanding.
- Existing transfer switches for Emergency Backup systems can NOT be used as one of the isolation devices required for islanding and/or incorporation of ESS under the Netting Tariff configuration.

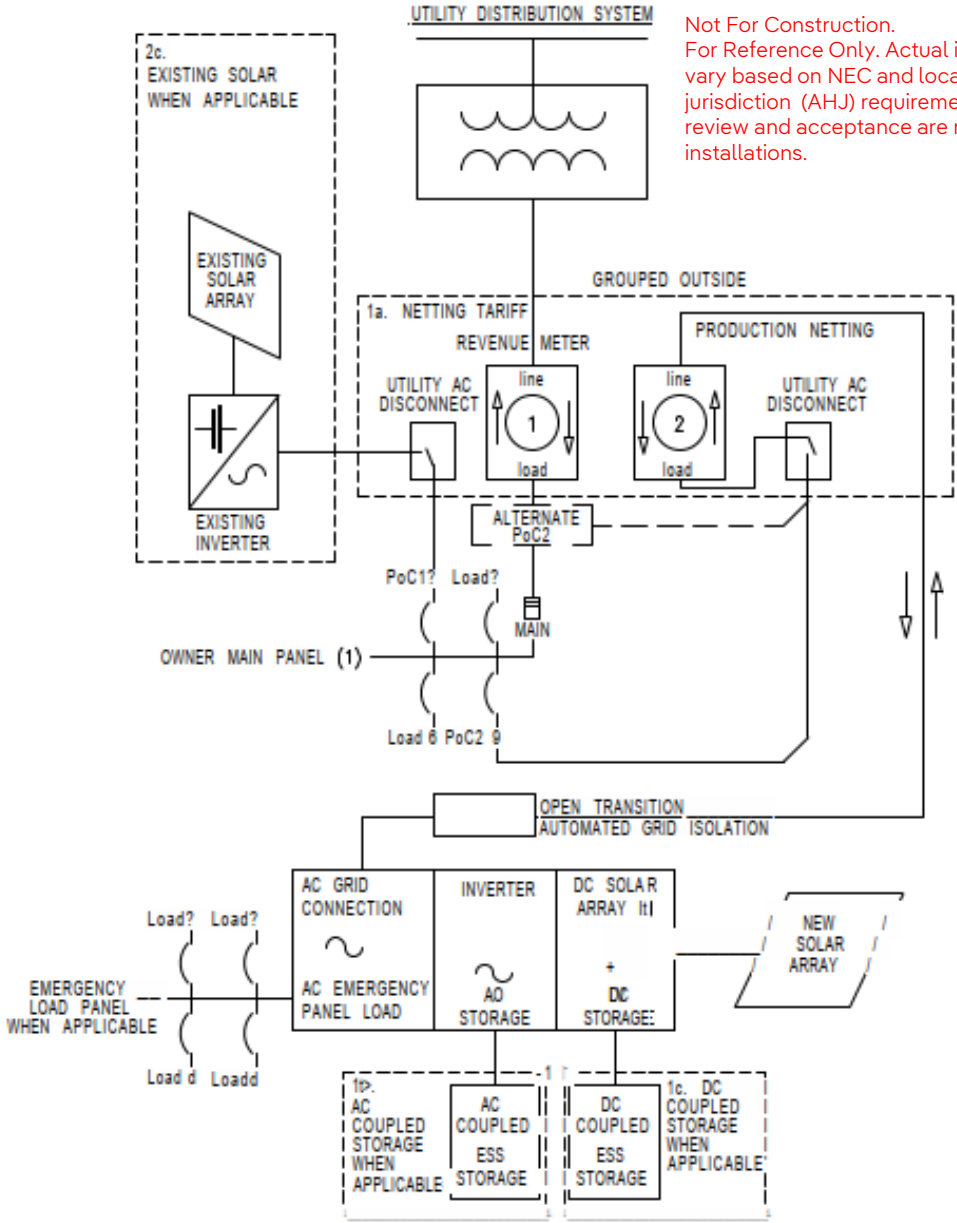

Not For Construction.
For Reference Only. Actual installation may vary based on NEC and local authority having jurisdiction (AHJ) requirements. UI Technical review and acceptance are required for all installations.

Netting Tariff - Production Meter in Series with Revenue Meter
Whole House Backup

Note 1

- For or Utility meter(s) located inside, the interconnecting customer will be required to upgrade and have the meter(s) relocated outside the customer facility. All meters and switches are required to be grouped unless a written variance is granted by UI. All requests for a variance must be submitted in writing to indoormeterrequest@uinet.com.

Note 2

- The utility AC disconnect must be located at ground level within 10 ft of the utility revenue meter(s), where utility personnel and first responders have 24/7 access. All fire, electric, building code, and bylaws must be followed.

Note 3

- Production meter socket and/or CT compartment must follow the UI Guidebook of Requirements. Revenue/Billing meter socket and/or CT compartment cannot be used as a tie point for DG equipment. Any Meter Socket Adapter (MSA) intended for use must be pre-approved by UI.

Note 4

- Socket must have a lever bypass. Line and load conductors for the production meter cannot be in the same raceway (i.e., trough). When neutral isolation is required, a neutral isolation kit from the same manufacturer of the socket must be used. Splices are not permitted.

Note 5

- Customer may need to contract additional insurance policy. The utility is not responsible for customer damages incurred during islanding or solar backup.
- To utilize to utilize ESS and solar array as a backup during grid outage, an automated grid isolation device must be used. Permanent markings indicating: "Production meter will be energized during outages" must be applied.
- The grid isolation device must be rated for available fault current.
- Grid Isolation must be rated for the element if located outdoor (NEC700/701 +UL1 008).
- Netting tariff prohibits the use of ESS to re-sell grid energy back to the grid.

Note 6

- Islanding accomplished by multiple isolation devices must be open transition and synchronized, consult with Ul Engineering prior to installation.
- Existing transfer switches for Emergency Backup systems can NOT be used as one of the isolation devices required for islanding and/or incorporation of ESS under the Netting tariff configuration.

Not For Construction.
For Reference Only. Actual installation may vary based on NEC and local authority having jurisdiction (AHJ) requirements. UI Technical review and acceptance are required for all installations.

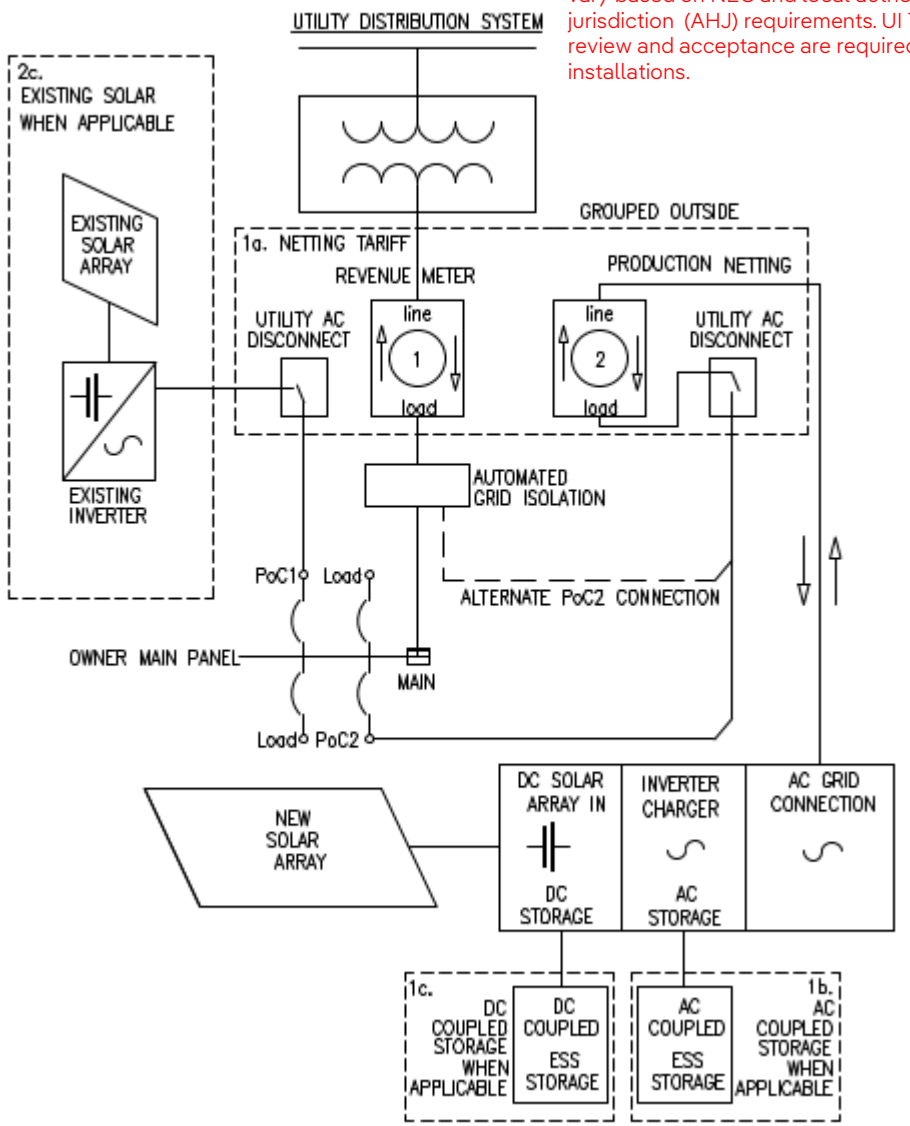

Buy-All Single Family- Production Meter in Parallel with Revenue Meter

Note 1

- Service entrance conductors must be sized for the absolute sum of both load and generation. Service increase may be required to accommodate for the addition of the net production meter(s).

Note 2

- For overhead services: A lever bypass pre-bussed meter pack must be used unless a written variance is granted by Engineering. POI of interconnection must be made at the weather head.
- For underground service: A lever bypass pre-bussed meter pack must be used. Consult with Engineering for the physical installation.

Note 3

- For or Utility meter(s) located inside, the interconnecting customer will be required to upgrade and have the meter(s) relocated outside the customer facility. All meters and switches are required to be grouped unless a written variance is granted by UI. All requests for a variance must be submitted in writing to indoormeterrequest@uinet.com. Any Meter Socket Adapter (MSA) intended for use must be pre-approved by UI.

Note 4

- The utility AC disconnect must be located at ground level within the vicinity of the utility revenue meter(s), where utility personnel and first responders have 24/7 access. All fire, electric, building code, and bylaws must be followed.

Note 5

- The utility is not responsible for customer damages incurred during islanding or solar backup. Customer may need to contract an additional insurance policy.
- ~~To utilize ESS and solar array as a backup during a grid outage, a dedicated circuit, independent from the production and billing meters, must be used.~~

Note 6

- Islanding must be facilitated by synchronized open transition transfer switches; consult with UI Engineering prior to installation. The production and billing meter cannot be energized during islanding.
- Existing transfer switches for Emergency Backup systems can NOT be used as one of the transfer switch devices required for the Buy-All tariff configuration.

Note 7

- Additional solar must be added behind the new production meter.

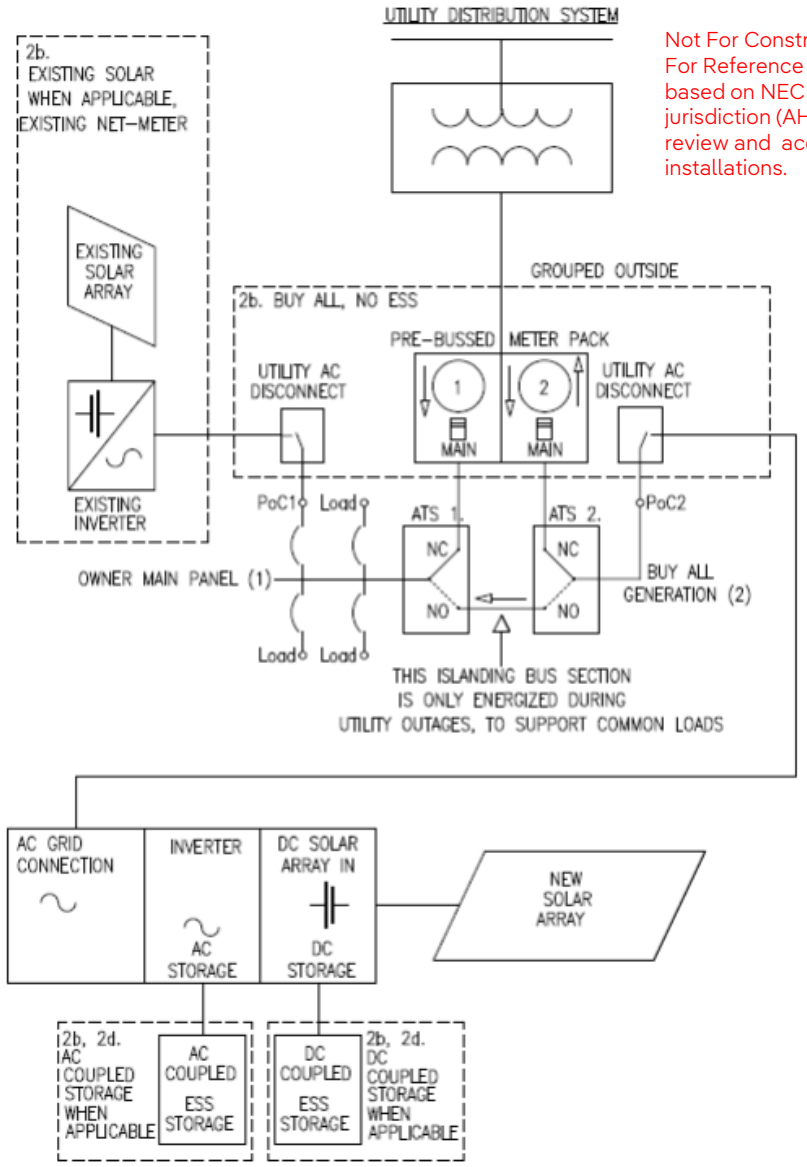

Not For Construction.
For Reference Only. Actual installation mayvary based on NEC and local authority having jurisdiction (AHJ) requirements. UI Technical review and acceptance are required for all installations.

Buy-All Multi-Family- Production Meter in Parallel with Revenue Meter

Note 1

- Service entrance conductors must be sized for the absolute sum of both load and generation. Service increase may be required to accommodate for the addition of the net production meter(s).

Note 2

- For overhead services: A lever bypass pre-bussed meter pack must be used unless a written variance is granted by Engineering. POI of interconnection must be made at the weather head.
- For underground service: A lever bypass pre-bussed meter pack must be used. Consult with Engineering for the physical installation.

Note 3

- For or Utility meter(s) located inside, the interconnecting customer will be required to upgrade and have the meter(s) relocated outside the customer facility. All meters and switches are required to be grouped unless a written variance is granted by UI. All requests for a variance must be submitted in writing to indoormeterrequest@uinet.com. Any Meter Socket Adapter (MSA) intended for use must be pre-approved by UI.

Note 4

- The utility AC disconnect must be located at ground level within the vicinity of the utility revenue meter(s), where utility personnel and first responders have 24/7 access. All fire, electrical, building code, and bylaws must be followed.

Note 5

- The utility is not responsible for customer damages incurred during islanding or solar backup. The customer may need to contract an additional insurance policy.
- ~~To utilize ESS and solar array as a backup during a grid outage, a dedicated circuit, independent from the production and billing meters, must be used.~~

Note 6

- Islanding must be facilitated by synchronized open transition transfer switches; consult with UI Engineering prior to installation. The production and billing meter cannot be energized during islanding.
- Existing transfer switches for Emergency Backup systems can NOT be used as one of the transfer switch devices required for the Buy-All tariff configuration.

Note 7

- Additional solar must be added behind the new production meter.

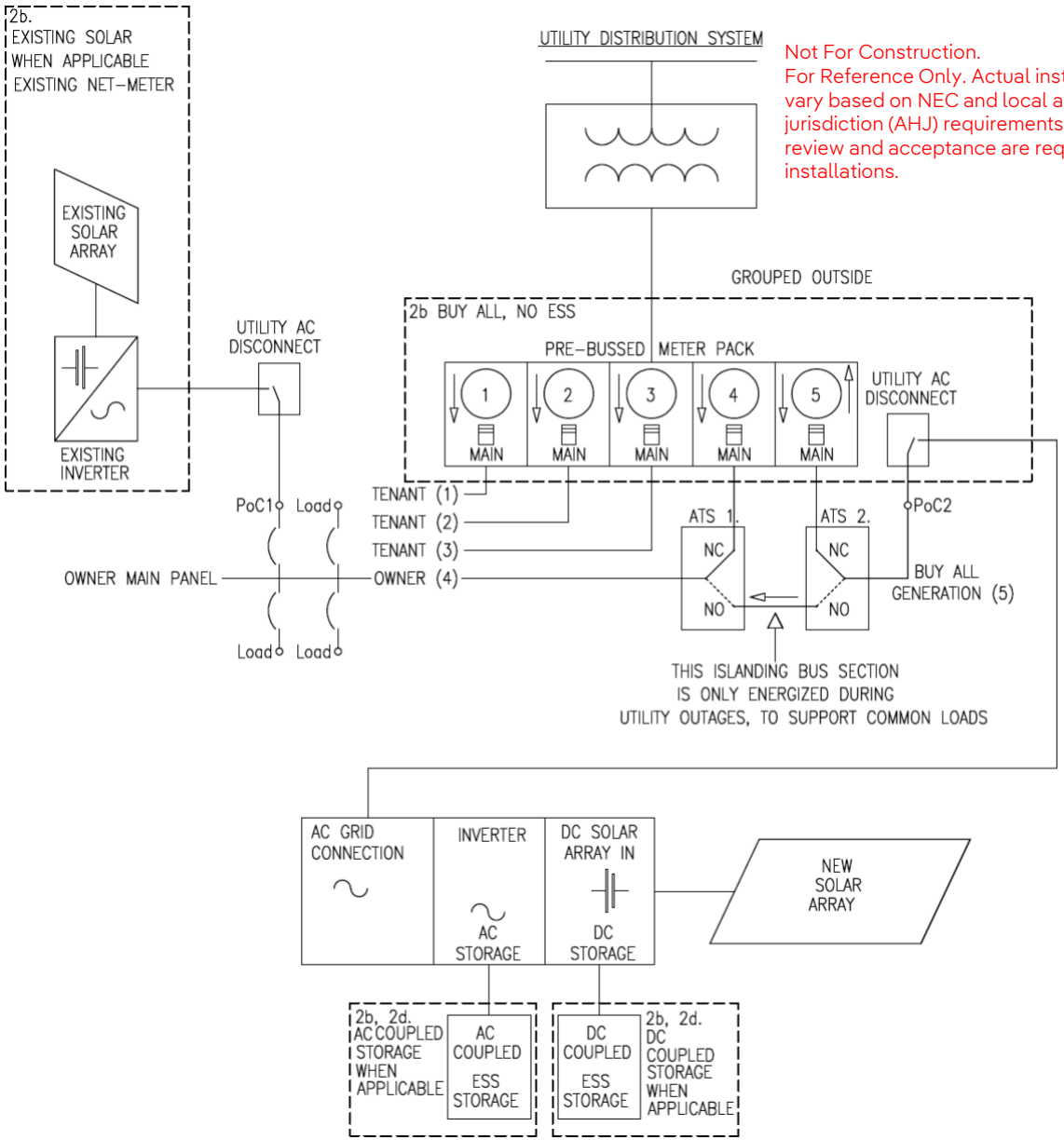

Not For Construction.
For Reference Only. Actual installation may vary based on NEC and local authority having jurisdiction (AHJ) requirements. UI Technical review and acceptance are required for all installations.