UI
An Avangrid company

EVERSOURCE

DOCKET 26-08-02 ANNUAL RESIDENTIAL RENEWABLE ENERGY SOLUTIONS PROGRAM REVIEW – YEAR 6

Topics for Technical Meeting Docket 26-08-02

1. RRES program application and deployment levels by month through June 2026, including an analysis of low-income and distressed municipality participation
2. RRES interconnection application and approval timelines (Order No. 13 compliance)
3. Summary of Written Comment Topics
   - Rate Setting
   - Contractor Compliance Working Group Report and contractor compliance requirements
   - Solar production measurement for DC-coupled solar and storage systems
4. Proposed Program Documents and Fees
5. Additional Comments

Application and Deployment Levels

January 2022 – June 2026

2022-2026 RRES Solar Deployment Levels – Eversource

Applications Received January 2022 - June 2026

Total AC Capacity: 484.9 MW
Total #: 58,581

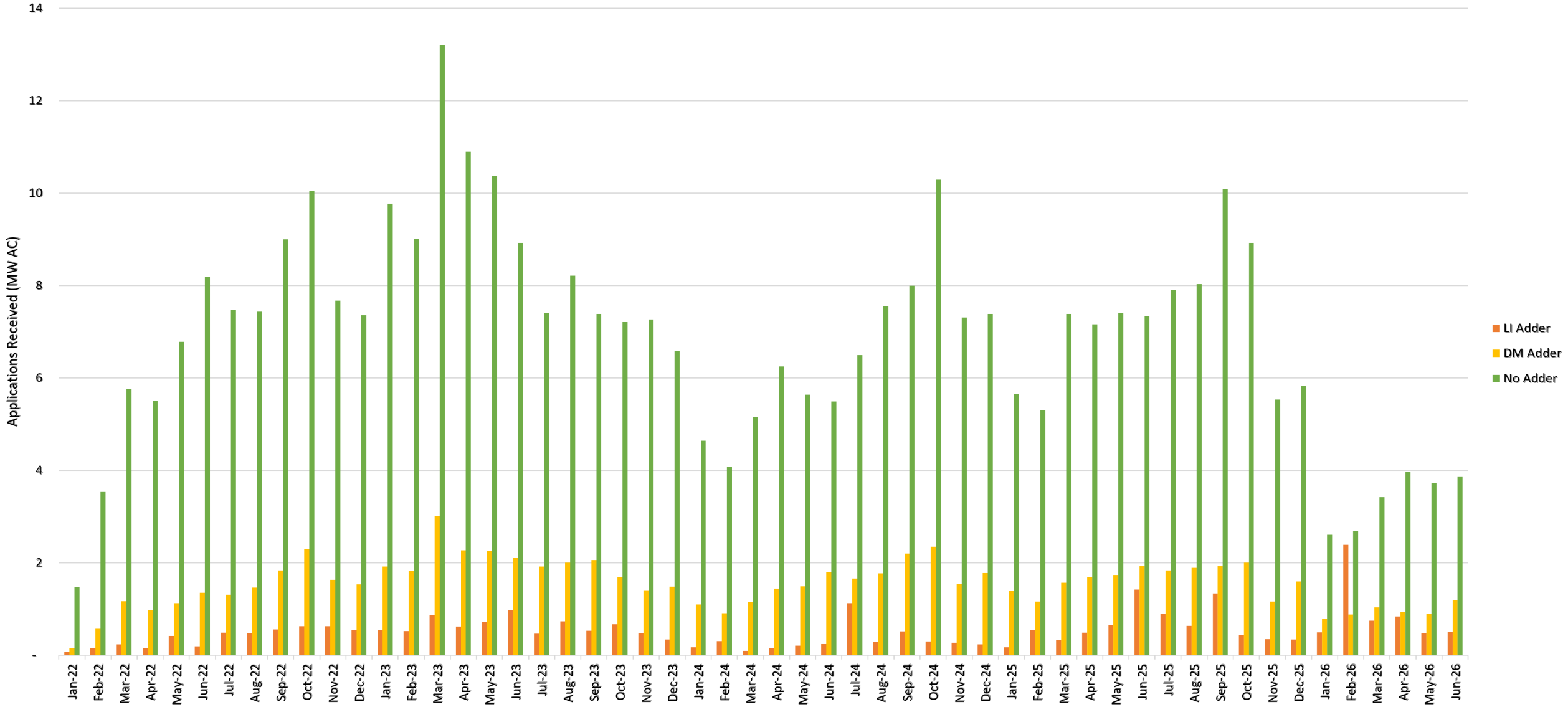

Data from Order 12, 7/15/26

2022-2026 RRES Solar Deployment Levels – UI

Applications Received January 2022 – June 2026

Total AC Capacity: 106 MW
Total #: 13,616

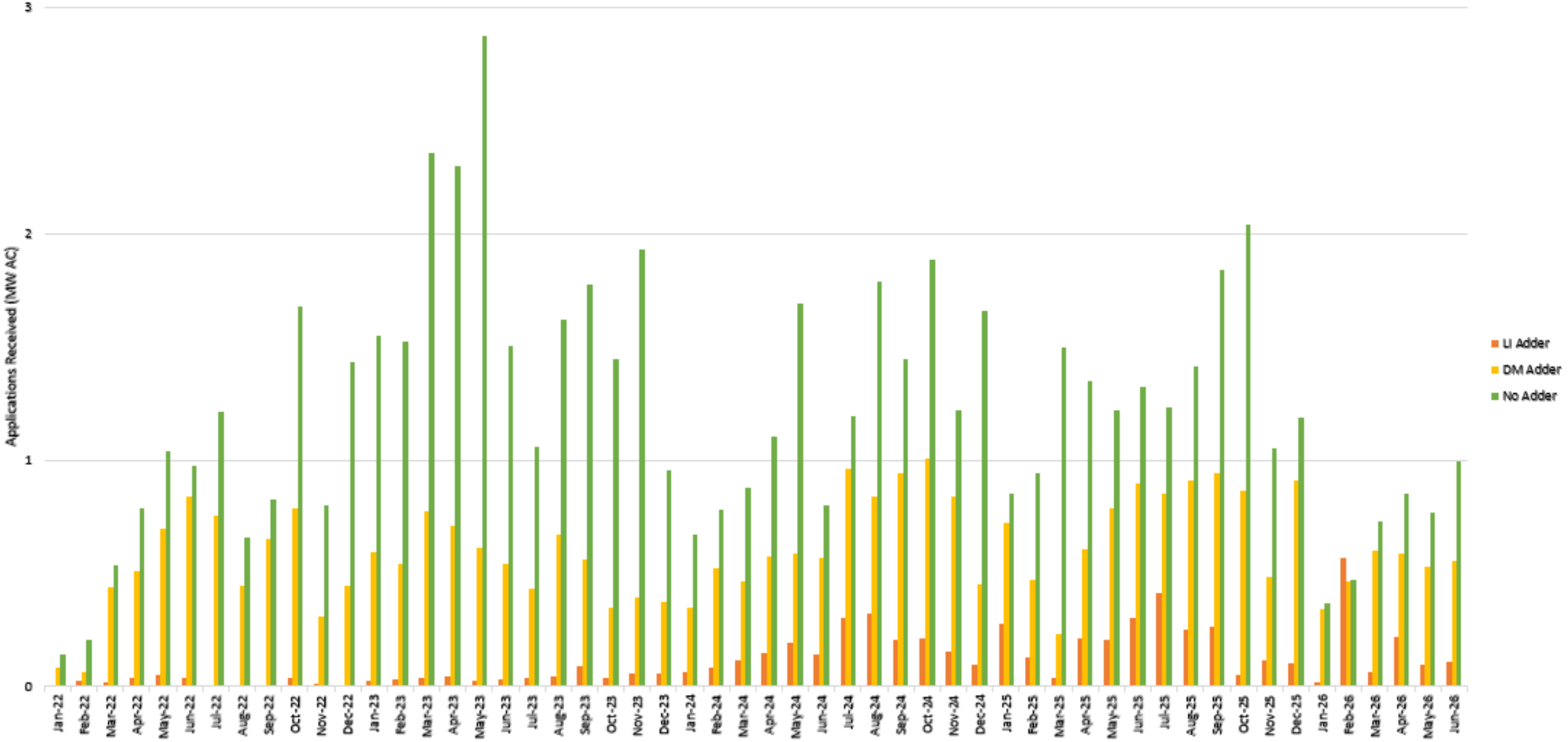

Data from Order 12, 7/15/26

2022-2026 RRES Solar Deployment Levels – Eversource

Systems Deployed January 2022 - June 2026

Total AC Capacity: 384.9 MW
Total #: 47,086

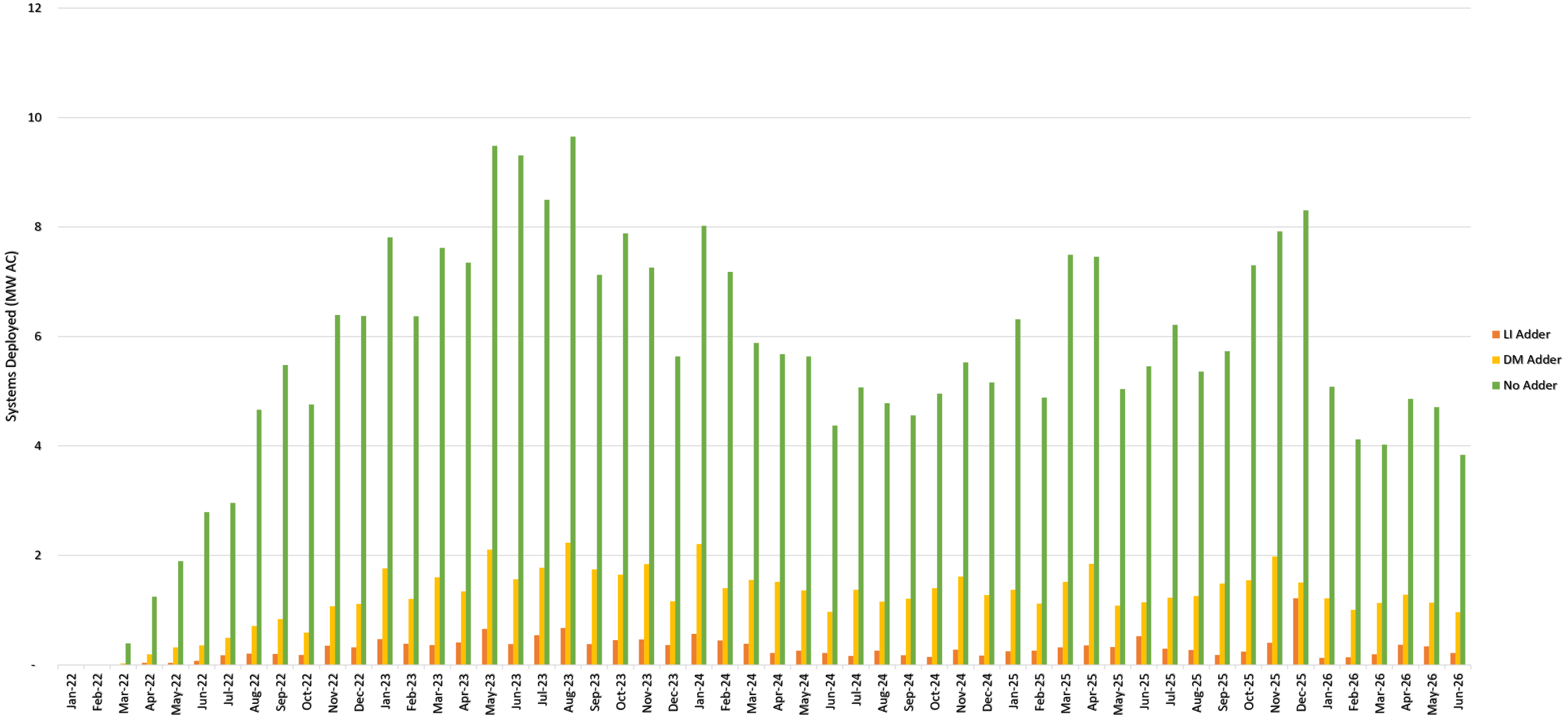

Data from Order 12, 7/15/26

2022-2026 RRES Solar Deployment Levels – UI

Systems Deployed January 2022 – June 2026

Total AC Capacity: 72 MW
Total #: 9,401

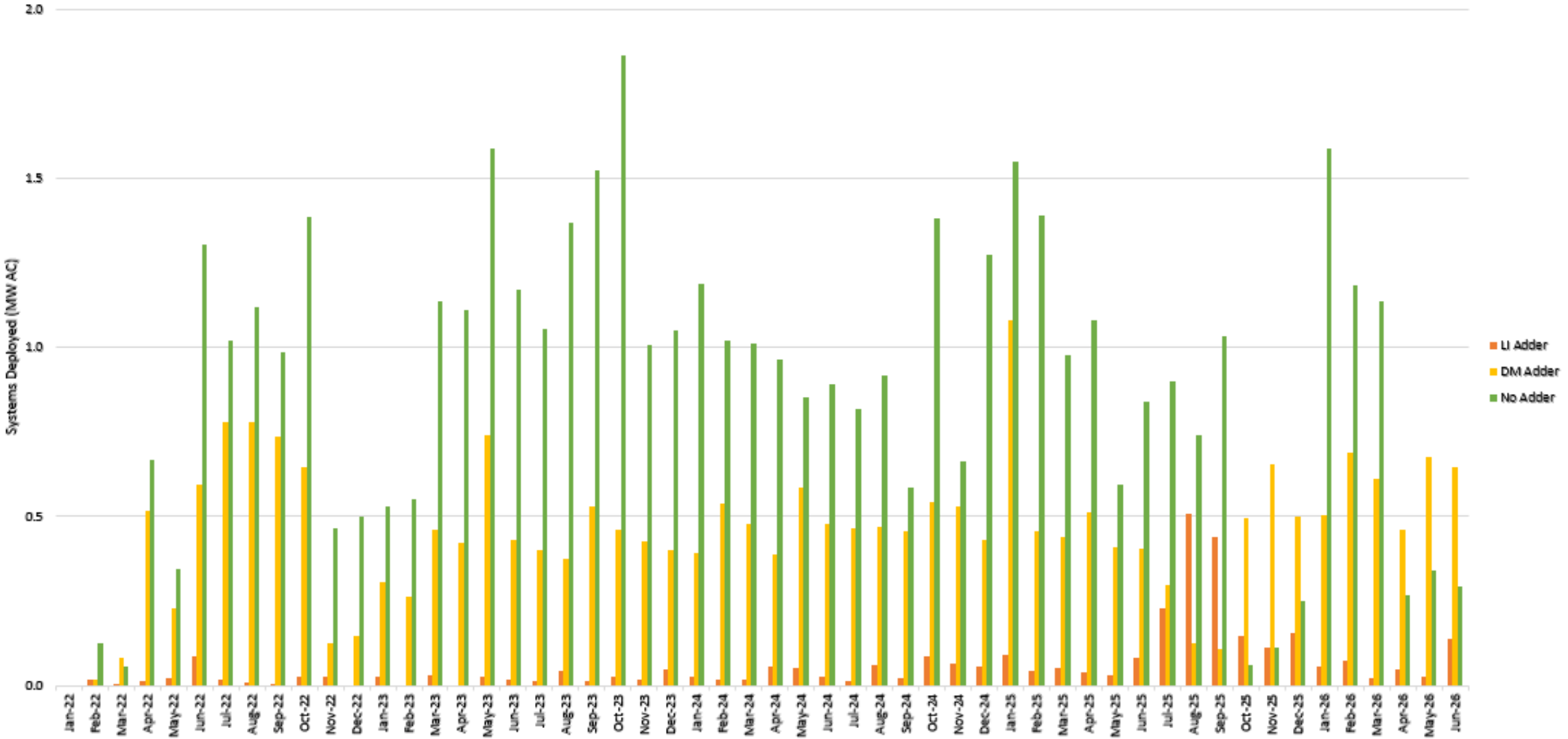

Data from Order 12, 7/15/26

2022-2025 RRES Solar Deployment Levels – Eversource
Low Income and Distressed Municipality Participation
Jan. 2022 - June 2026

DM Total AC Capacity: 66.6 MW
DM Total #: 9,542
LI Total AC Capacity: 16.4 MW
LI Total #: 2,058

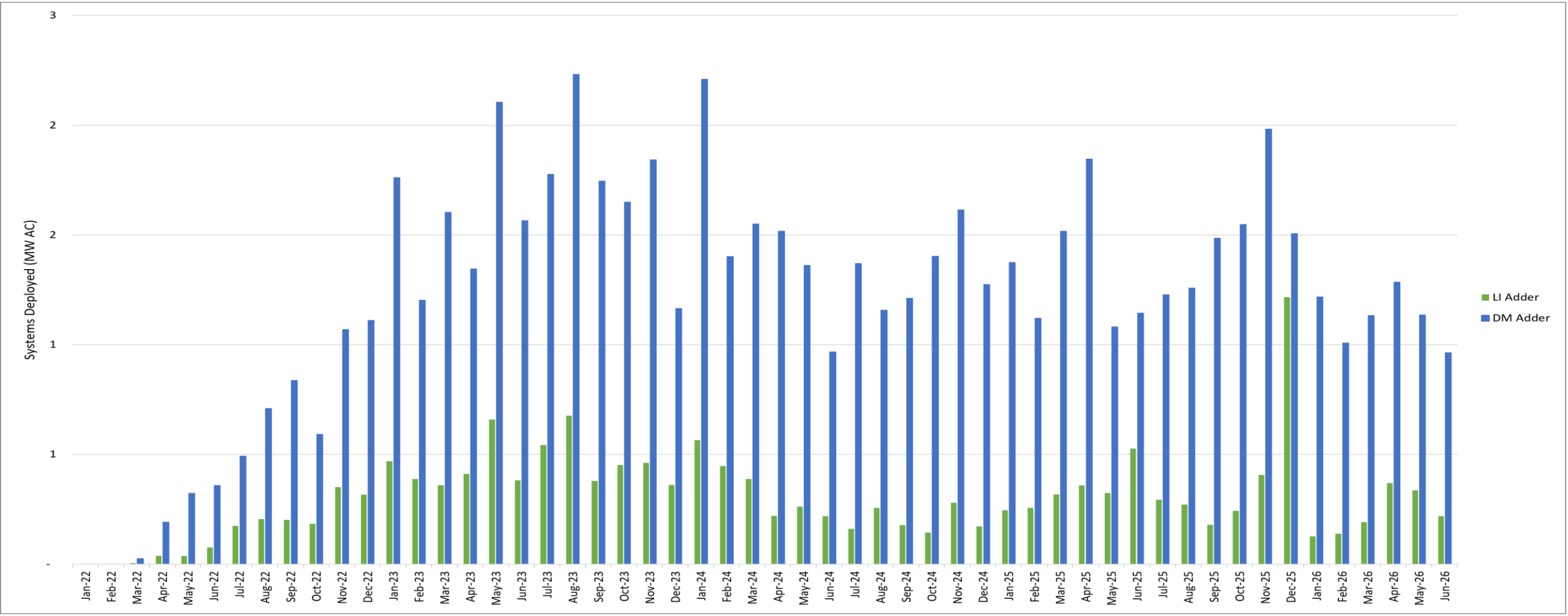

Data from Order 12, 7/15/26

2022-2025 RRES Solar Deployment Levels – UI

Low Income and Distressed Municipality Participation

Jan. 2022 – June 2026

DM Total AC Capacity: 24.69 MW
DM Total #: 3,174
LI Total AC Capacity: 3.28 MW
LI Total #: 421

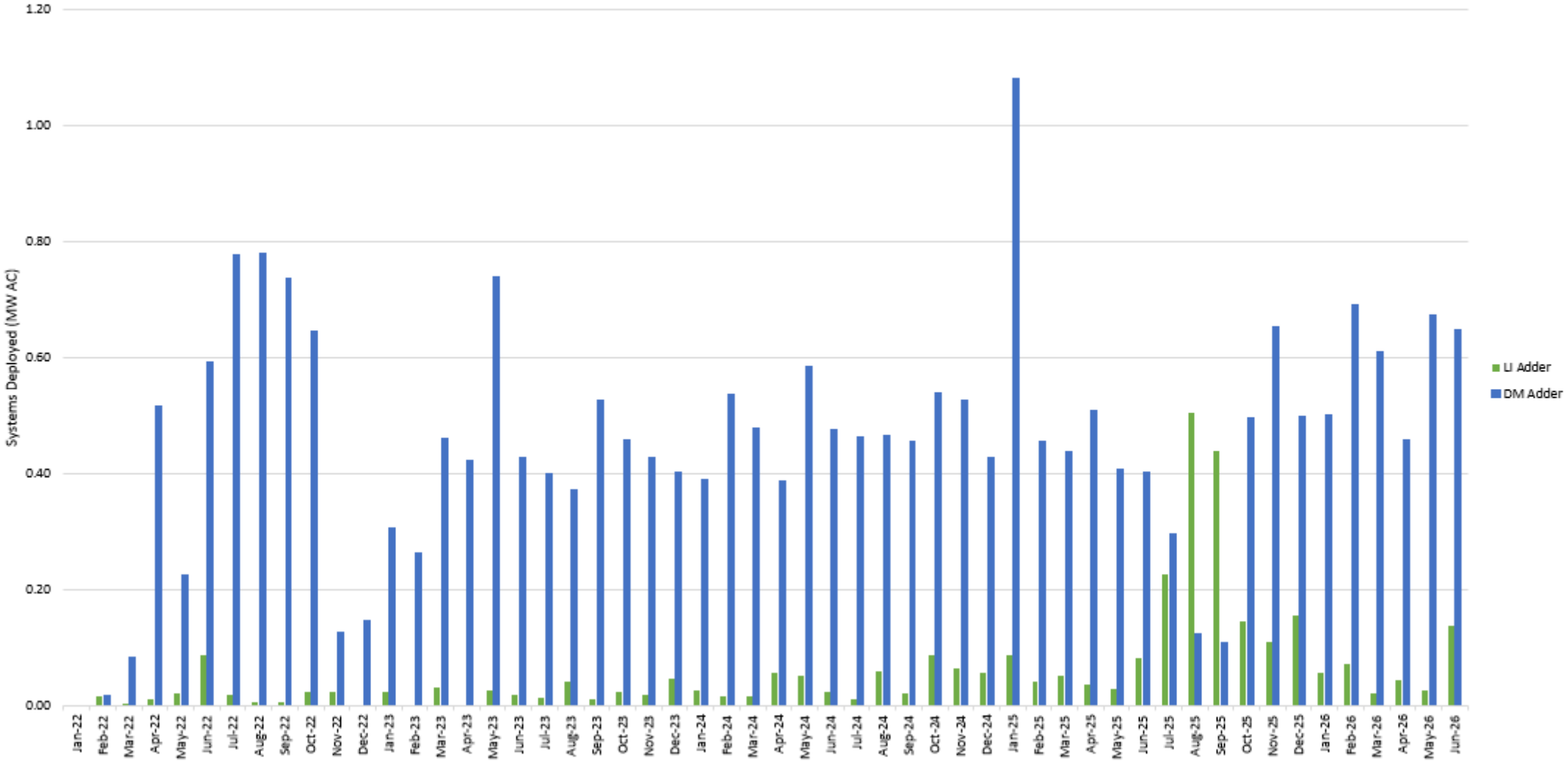

Data from Order 12, 7/15/26

RRES Interconnection Application and Approval Timelines

Eversource RRES Interconnection Application and Approval Timelines

Milestones	Average Business Days		
	Apr. 2026	May 2026	Jun. 2026
Application submission to tariff review approval			
Tariff review time only	7	8	8
Full timeline[1]	8	8	8
Tariff review approval to interconnection conditional approval and work order issuance[2]	8	5	6
Utility notification of completed inspection to meter installation			
Applications not requiring in-field corrections	12	11	9
Applications requiring in-field corrections	52	51	46
Meter installation to issuance of the permission to operate	4	3	4

Data from Order 13, 08/01/26

UI RRES interconnection application and approval timelines *

Request #	Regulatory Request	Average Number of Days
1	*The length of time from application submission to tariff review approval*	**12.33**
2	*The length of time from tariff review approval to interconnection contingent approval*	**9.50**
3	*The length of time to receive the work order number needed to apply for permits from cities and towns*	**4.34**
4	*The length of time to process payments when applicable*	**16.94**
5	*The length of time for any applicable witness tests*	**1.05**
6	*The number of days between when the utility is notified of a completed inspection to meter installation*	**1.50**
7	*The length of time for final issuance of the permission to operate*	**45.66**

Table 1: Residential Renewable Energy Solutions Milestones - April 1, 2026 through June 30, 2026

Data from Order 13, 07/26/26

Summary of Topics from Written Comments Filed May 28, 2026

Rate Setting

- Average upfront installed system cost ($/watt DC) year over year:

	2022	2023	2024	2025	2026 Q1
Eversource	$3.86	$3.88	$3.68	$3.71	$3.69
UI	N/A	$3.56	$4.65	$4.30	$4.28

- ITC not expected to be available to residential PV owners in 2027.
- EDCs do not collect estimated or actual O&M costs.
- The EDCs calculated the average capacity factor specific to RRES solar photovoltaic systems in Connecticut to be around 11% (calculated with DC system size).

Contractor Compliance Working Group Report and Contractor Compliance Requirements

- The EDCs support implementing consensus recommendations from the Contractor Compliance Working Group Report
- The EDCs recommend the standardized starting utility rates be based on historical utility rates rather than third-party supplier rates.
- The Contractor Compliance Working Group Report did not include recommendations specific to customers on the Low-Income Discount Rate (LIDR). The EDCs recommend PURA consider standards specific to this customer segment, to avoid presenting LIDR customers with unrealistic estimated savings. The EDCs will file further comments on this in response to Interrogatory CAE-022.

Solar Production Measurement for DC-Coupled Solar and Storage Systems

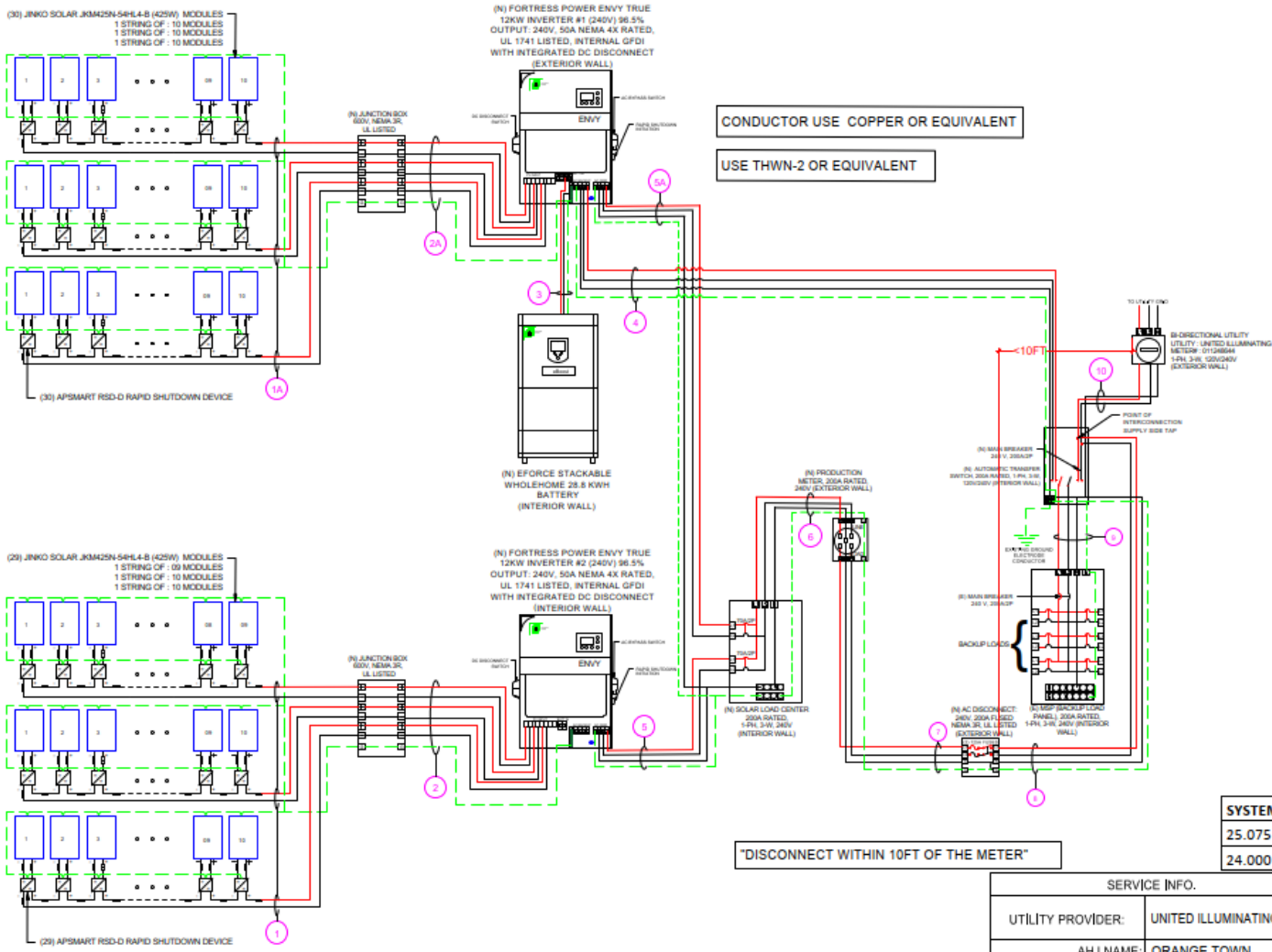

SYSTEM RATING
25.075 KWDC
24.000 KWAC

SERVICE INFO.	
UTILITY PROVIDER:	UNITED ILLUMINATING
AHJ NAME:	ORANGE TOWN
MAIN SERVICE VOLTAGE:	240V
MAIN BREAKER RATING:	200A
MAIN SERVICE PANEL:	200A
MAIN SERVICE LOCATION:	EAST
SERVICE FEED SOURCE:	OVERHEAD

SCALE: NTS

Solar Production Measurement for DC-Coupled Solar and Storage Systems

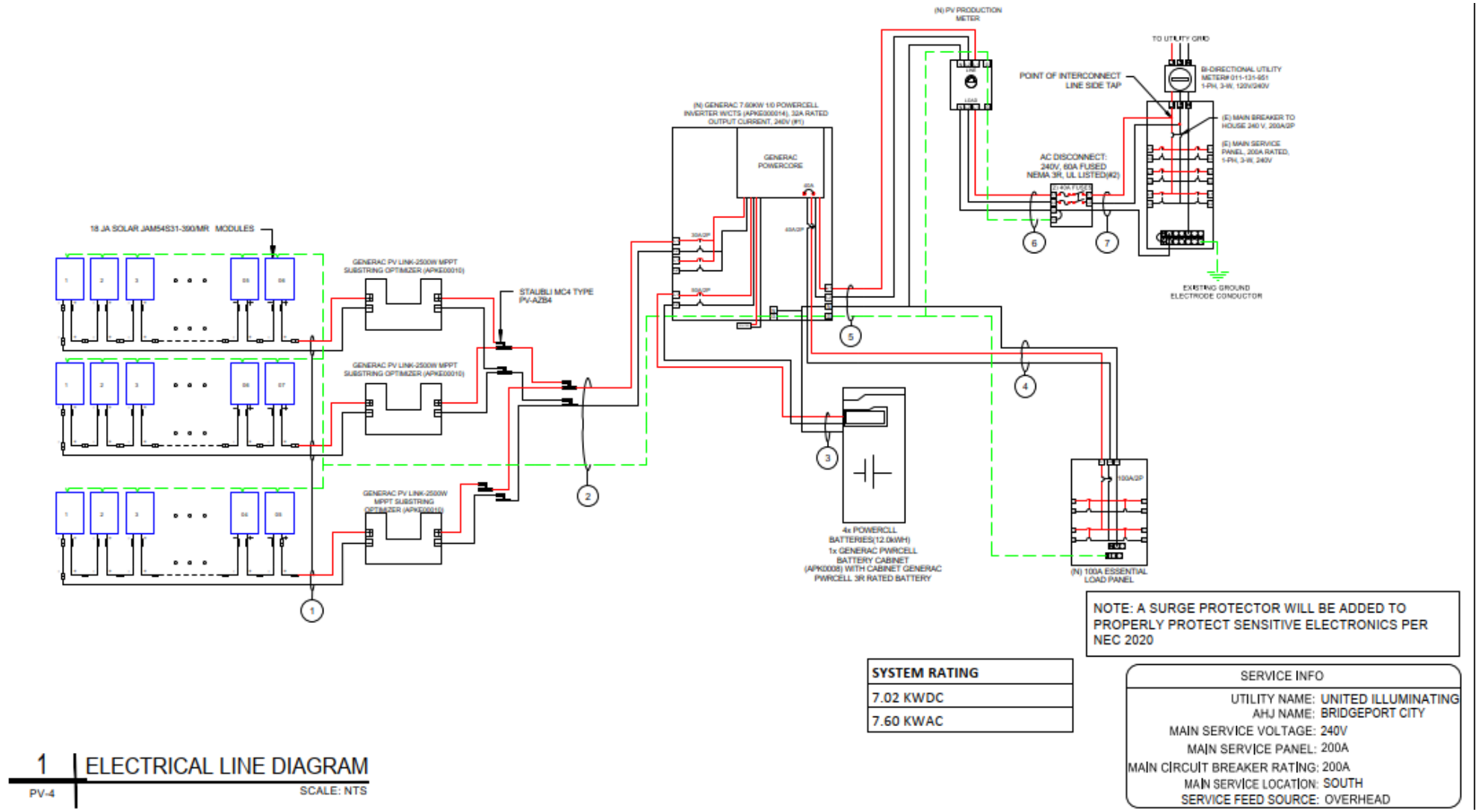

NOTE: A SURGE PROTECTOR WILL BE ADDED TO PROPERLY PROTECT SENSITIVE ELECTRONICS PER NEC 2020

SYSTEM RATING
7.02 KWDC
7.60 KWAC

SERVICE INFO	
UTILITY NAME:	UNITED ILLUMINATING
AHJ NAME:	BRIDGEPORT CITY
MAIN SERVICE VOLTAGE:	240V
MAIN SERVICE PANEL:	200A
MAIN CIRCUIT BREAKER RATING:	200A
MAIN SERVICE LOCATION:	SOUTH
SERVICE FEED SOURCE:	OVERHEAD

1 ELECTRICAL LINE DIAGRAM
PV-4 SCALE: NTS

Solar Production Measurement for DC-Coupled Solar and Storage Systems

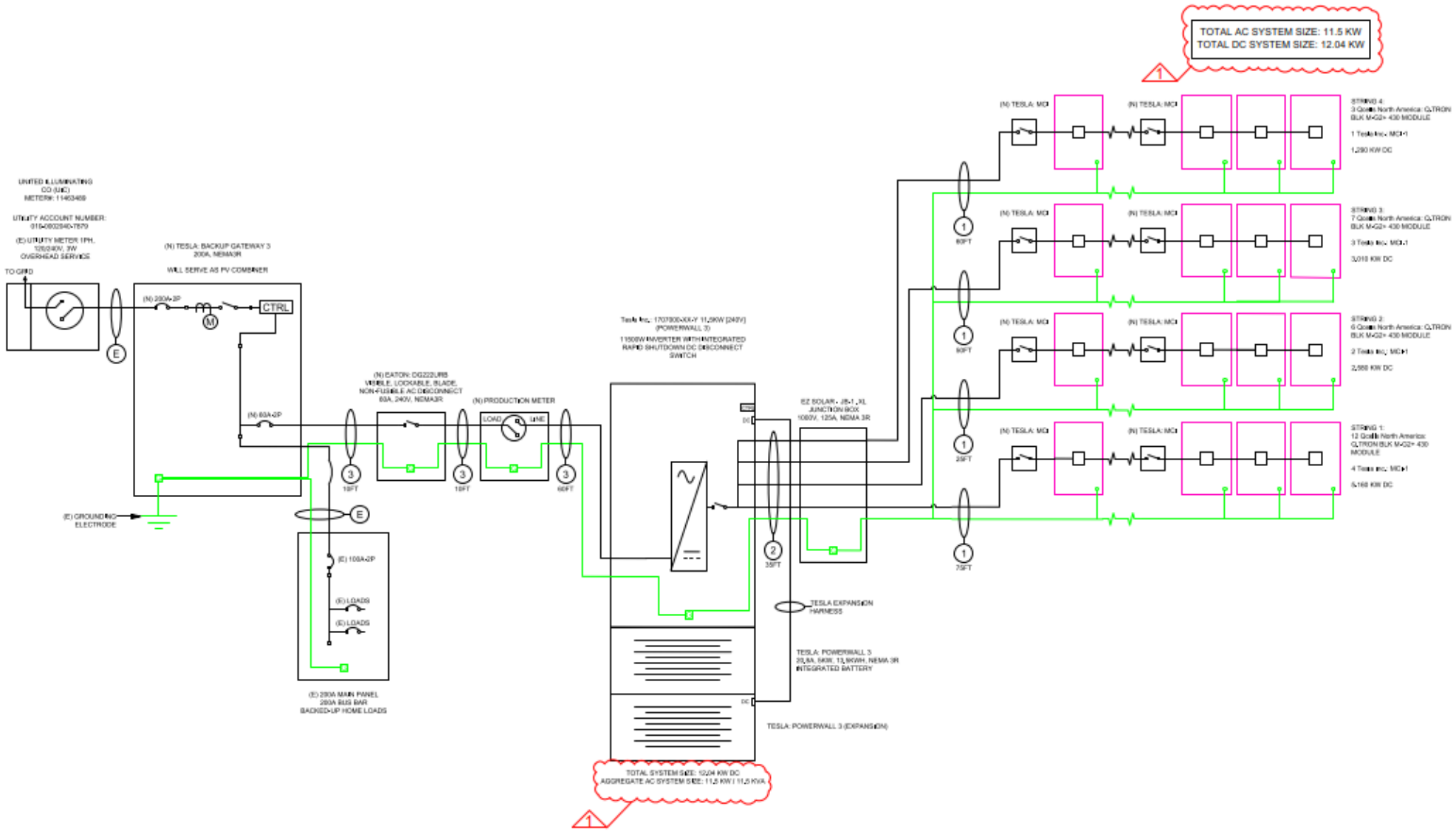

Solar Production Measurement for DC-Coupled Solar and Storage Systems

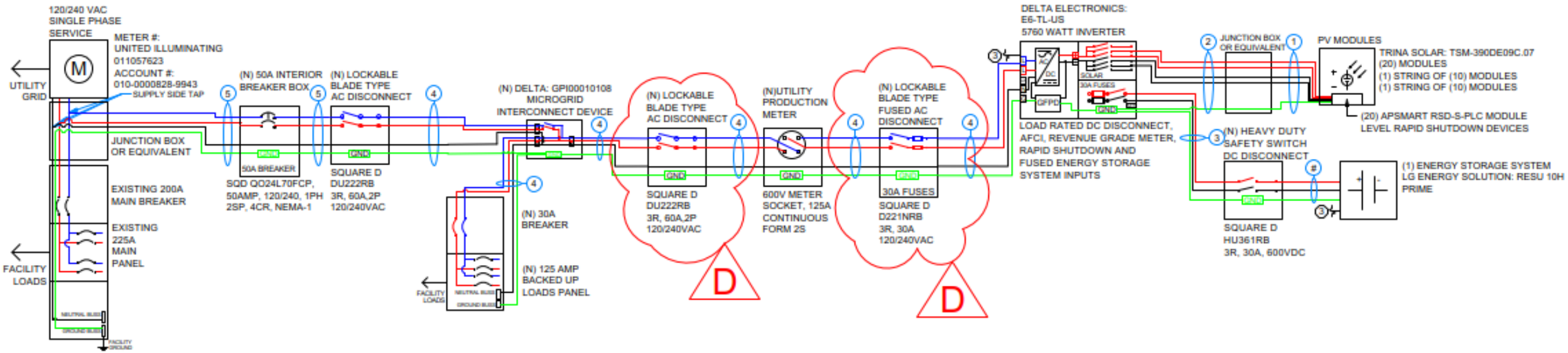

Solar Production Measurement for DC-Coupled Solar and Storage Systems

1c. Netting Tariff < 25kW, DC-coupled ESS

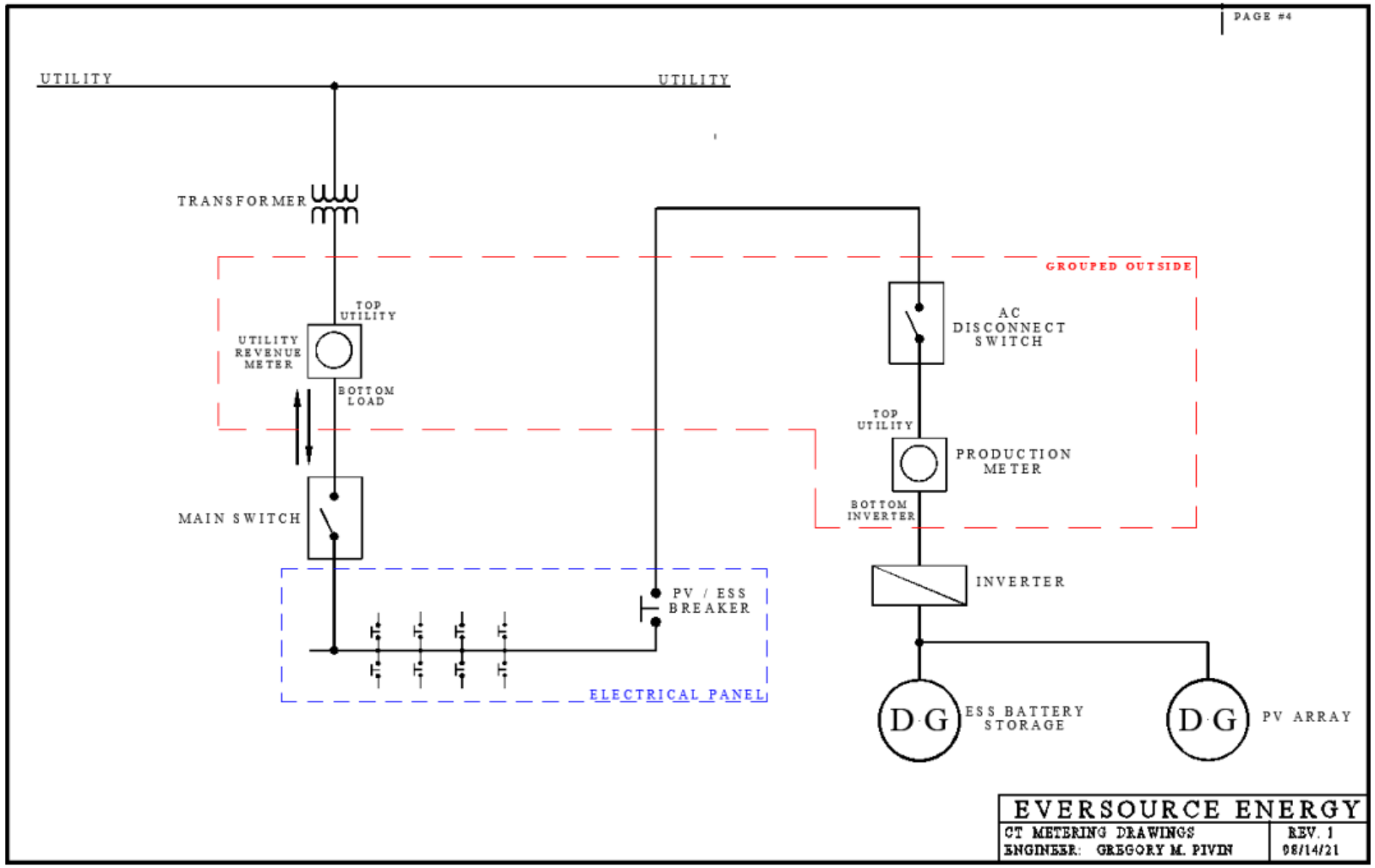

Note 1 – PoC

- All interconnection points are required to be placed behind the utility revenue meter
- >>> No connections are to be made within the utility revenue meter socket or in utility transformer compartment. <<<

Note 2 – Utility Revenue Meter

- If the utility revenue meter is located inside customer's residence, the interconnecting customer will be required to upgrade and have the meter relocated outside the customer's residence near both the production meter and the utility disconnect switch.
- Existing 400A service metered with current transformers must be updated to a self-contained CL320 meter socket

Note 3 – Utility Production Meter

- Utility feed for the production meter, the socket is required to be wired top side utility, bottom side inverter.

Note 4 – Utility AC Disconnect Switches

- The utility disconnect switch is required to be located on the ground level within vicinity of the utility revenue meter where our utility personnel will have 24 / 7 access.
- The utility AC emergency disconnect switch is required to be located ahead of the production meter where utility personnel will be able to isolate the metering circuit.

Note 5 – Inverter

Additional outputs of the inverter may require separate metering.

Special Notes:

- All meters and switches are required to be grouped.
- If a back-up or critical load subpanel is to be installed behind the Utility production meter, it shall be equipped and configured so that it is normally energized by a separate connection to the main panel, thereby bypassing the production meter and inverter, and using an Automated Transfer Switch, normally disconnected to the solar array and/or battery. At times when the electric grid becomes deenergized (e.g., power outage), the switch would engage allowing the subpanel to be energized by the solar array and/or battery. Except for the parasitic load utilized to operate the coupled solar and storage system, there shall be no load connected behind the Utility production meter.

Proposed Program Document and Fee Changes Filed August 1, 2026

Proposed 2027 Document and Fee Changes

- The EDCs proposed minimal changes to the program documents in the August 1, 2026 Filings. The key changes proposed include:
  - Customer disclosure form edits as recommended by the Contractor Compliance Working Group Report.
- Eversource proposed no changes to the Application Fee or Meter Fee from 2026 to 2027. The unchanged fee amounts are:
  - Application Fee: $163
  - Meter Fee: $183 (Form 2S Bridge) or $234 (Form 12S Bridge)
- UI proposed changes to the Application Fee and Meter Fee from 2026 to 2027. The proposed fee amounts are:
  - Application Fee: $240
  - Meter Fee: $358

Additional Comments

Skipped Production Meters Progress

- Skipped production meter installations are still ongoing, with about one quarter in Eversource's territory still needing to be installed.
  - Of projects still needing a production meter, the majority are awaiting the municipal inspection.
  - Net financial impact is minimal, but delays impact customer experience and efficiency of payment processing.
  - Approximately half of the remaining projects are customer-owned

	Total Online without a Production Meter	Number that have received a Production Meter	Percent of Total
Eversource	5,679	4,032	71%

Data as of 8/12/26

Multi-Family Affordable Housing (MFAH) Siting Requirements

- Current MFAH eligibility rules allow system sizing up to either historical usage levels or 9 kW AC per unit (if historical data is not available), plus electrification measures
- In addition, the current rules do not specify requirements for system siting within the eligible property
- For some eligible properties, current rules may allow for large, commercial-scale, ground-mounted systems to receive the RRES Buy-all incentive rate plus the income-eligible adder, totaling $0.3839/kWh for 2026. In some cases these systems could be sited entirely separate from the existing building electric service while still on the eligible property.
- The EDCs recommend PURA consider whether adjustments to current RRES rules or a differentiated MFAH RRES rate may be necessary to balance program benefits with ratepayer costs

RRES Contact Information

United Illuminating:

- Alexandra Torrealba, alexandra.torrealba@uinet.com
- res.renewableenergysolutions @uinet.com

Eversource:

- Julia Danahy, julia.danahy@eversource.com