STATE OF CONNECTICUT
DEPARTMENT OF ENERGY AND ENVIRONMENTAL PROTECTION
PUBLIC UTILITIES REGULATORY AUTHORITY

	:	DOCKET NO. ____
PETITION FOR APPROVAL OF METHOD AND MANNER OF CONSTRUCTION AND PERMISSION TO ENERGIZE THE DANBURY UNDERGROUND CABLE REPLACEMENT PROJECT 1270 AND 1337 LINES (APPROXIMATELY 50 FEET OF OPEN DUCT BANK CROSSING	:	
	:	August 12, 2026

PETITION OF
THE CONNECTICUT LIGHT AND POWER COMPANY
DOING BUSINESS AS EVERSOURCE ENERGY

Pursuant to the Connecticut General Statutes ("CGS") §16-243 and the Regulations of Connecticut State Agencies ("RCSA") §16-11-137 and §16-11-139, The Connecticut Light and Power Company doing business as Eversource Energy ("Eversource") respectfully requests that the Public Utilities Regulatory Authority ("PURA") approve the method and manner of construction and provide permission to energize the Danbury Underground Cable Replacement Project (1270 and 1337 Lines) ("Project"), over an approximate 50-foot section where the cables would be installed within polyvinyl chloride ("PVC") conduits set in an underground concrete encased duct bank[1], as specifically described below ("the Petition"):

1. The purpose of the overall Project (between Triangle Substation and Middle River Substation in Danbury) is to replace the existing high-pressure fluid filled (HPFF) transmission cables, which have exceeded their operating life, with solid dielectric insulated cross-linked polyethylene ("XLPE") cables. Reference RCSA §16-11-137(1). Previously Eversource had submitted a Petition to PURA for the majority of the

[1] The concrete encased duct bank installation will consist of excavating a trench within the roadway, placing conduit assemblies on polyethylene spacers to maintain separation and alignment, and encasing the conduits in controlled-strength concrete to provide structural protection and thermal stability. After the concrete has achieved sufficient strength, the trench is backfilled and restored in accordance with applicable construction and environmental requirements.

installation absent major utility infrastructure crossing areas that required detailed reviews by third parties. Eversource's prior Method and Manner Petition was approved by PURA on August 6, 2025, under Docket No. 25-06-27. This Petition seeks a decision solely for the Enbridge Algonquin Gas Pipeline Crossing.[2]

Eversource is still actively engaged in engineering reviews with the Connecticut Department of Transportation Office of Rail ("CTDOT") and Metro-North Railroad ("MNR") for the Wildman Street Crossing for the Project[3], and The Housatonic Railroad Company ("HRR") for the Taylor Street Crossing[4] for crossing beneath these railroads. Eversource will present these two remaining locations in a future Petition filing to PURA after receiving letters of no objection from these entities.

2. For this Petition, the proposed construction will take place within the public roadway on Westville Avenue Extension where it intersects Middle River Road and Filmore Avenue within the City of Danbury (Station 180+00 to Station 180+50). A map indicating the proposed location of circuits, including the point at which the Project will cross over the Enbridge Algonquin Gas Pipeline is attached as Exhibit A – Map - Danbury Underground Replacement Project 1270 and 1337 Lines Map. Reference RCSA §16-11-137 (2) and §16-11-139(1).

3. The length of the underground concrete encased duct bank installation at the Enbridge Algonquin Gas Pipeline Crossing is approximately 50 feet and is located within the public roadway.[5] Reference RCSA §16-11-137(3).

4. The overall Project involves constructing two new 115-kV, 60-hertz, three-phase, single-cable per phase XLPE transmission lines to replace the existing HPFF lines (Line 1270

[2] Station 180+00 to Station 180+50, identified as the Enbridge Crossing (Segment 6) in Section 3 and Exhibit A of the PURA Petition approved under Docket No. 25-06-27.
[3] Station 15+00 to Station 16+50, identified as the MNR Crossing (Segment 2) in Section 3 and Exhibit A of the PURA Petition approved under Docket No. 25-06-27.
[4] Station 21+50 to Station 24+50, identified as the HRR Crossing (Segment 4) in Section 3 and Exhibit A of the PURA Petition approved under Docket No. 25-06-27.
[5] Adjacent to these limits, the XLPE installation continues in Middle River Road to the southwest and Westville Avenue Extension to the southeast.

and Line 1337). The 50 feet underground concrete encased duct bank method of installation for crossing the Enbridge Algonquin Gas Pipeline is the subject of this Petition. Reference RCSA §16-11-137(4) and 16-11-137(5).

5. The section of the Project subject to this Petition will entail the installation of approximately 50 feet of an underground concrete encased duct bank limited to the Enbridge Algonquin Gas Pipeline Crossing located between Station 180+00 and Station 180+50 on Westville Avenue Extension where it intersects Middle River Road and Filmore Avenue. The duct bank will be installed at a depth below grade of approximately 12 feet, crossing under the 42-inch Algonquin Gas Pipeline. Within the duct bank, the 3-phase conductor cables, communication lines, and grounding lines will be pulled through individually placed PVC conduits, with their alignment held in place using specifically designed conduit spacer assemblies then encased with high-strength thermal concrete. Reference RCSA §16-11-137(5).

6. The materials to be used include:

- Minimum 3,000 psi concrete encased duct banks
- Schedule 40 polyvinyl chloride pipe conduits
- Thermally Controlled Low Strength Material with a maximum compressive strength of 200 psi.
- Road materials as prescribed, if necessary, by the City of Danbury and the CT DOT.
- 115-kV 5000-kcmil aluminum cables with cross-linked polyethylene insulation
- Two 500-kcmil ground continuity conductors
- Fiber optic cables for communication

Reference RCSA§ 16-11-137(5), §16-11-137(6), and §16-11-137(7).

7. Lightning protection will consist of surge arresters at each of the substations where the underground transmission line will terminate. The sheaths of all transmission cables will be single-point grounded at splice vaults and at the terminating ends. In addition, ground continuity conductors will be installed within 2-inch PVC conduits along the length of the Project including the gas line crossing, as part of lightning protection for the overall system, Reference RCSA §16-11-137(7).

8. The section of the Project subject of this Petition will cross under a gas transmission pipeline. No steel plates or other special features will be employed at the points of crossing over the gas line unless necessary due to field conditions or specified by the owner. Reference RCSA §16-11-137(8).

9. Construction shall be in accordance with Part 2 of the 2023 Edition of the National Electrical Safety Code as recommended in RCSA § 16-11-134. Reference RCSA §16-11-137(9).

10. The Project was reviewed to identify the names of all utilities and municipalities, or railroads affected, whose exposed circuits or underground circuits, or other facilities are crossed over or under by the Project. The following utilities, municipalities, agencies, and railroads within the Project's underground concrete encased duct bank crossing limits are as follows:

- Algonquin Gas Transmission (Enbridge)

A letter of no objection for Algonquin Gas Transmission (Enbridge) is attached in *Exhibit B* – Letter of No Objection - Danbury Underground Replacement Project 1270 and 1337 Lines. Reference RCSA §16-11-137(10) and §16-11-139(2).

11. Construction of the approximately 50-foot underground concrete encased duct bank crossing is scheduled to begin in early Fall 2026 and is expected to be completed within 30 days**.** The Project will energize these circuits after completion of construction of the entire Project which is anticipated by 2028. Reference RCSA §§ 16-11-137(11).

12. The Project does not include overhead line construction. Reference RCSA §§ 16-11-137(12).

13. A Plan & Profile drawing showing approximate location, depth and clearance of all known underground circuits, tracks and other underground facilities of municipalities and other utilities crossed over, under or adjacent to the underground concrete encased duct bank at the Enbridge Algonquin Gas Pipeline Crossing, and typical trench details are

attached in *Exhibit C* – Drawings - Danbury Underground Replacement Project (1270 and 1337 Lines), Station 180+00 to Station 180+50[6]. Reference RCSA §16-11-137(13).

14. Eversource seeks permission to energize after completion of construction. Reference RCSA §16-11-137(14).

15. On March 6, 2025, the Connecticut Siting Council ruled in favor of Petition No. 1642 by issuing a Declaratory Ruling that a Certificate of Environmental Compatibility was not required because the Project would not result in substantial adverse environmental effects.

Pursuant to CGS §16-243 and having met the requirements of RCSA §16-11-137 and §16-11-139, Eversource hereby requests PURA's approval of the method and manner of Project construction and permission to energize the new transmission line, as specifically described above.

RESPECTFULLY SUBMITTED THIS 12th day of August 2026.

THE CONNECTICUT LIGHT AND POWER COMPANY DOING BUSINESS AS EVERSOURCE ENERGY

By: Allison Klein

Allison Klein
Manager
Transmission Line Engineering
Eversource Energy
247 Station Drive
Westwood, MA 02090

[6] The Enbridge Algonquin Gas Pipeline is detailed in the profile view on drawing No. 01116-10006p016, *(Exhibit C)*, as *30" AGT. AGT stands* for Algonquin Gas Transmission.

EXHIBIT A
MAP
Required by RCSA §16-11-139(1)


Enbridge Algonquin
Gas Pipeline Crossing
Westville Avenue Extension
Sta. 180+00 to Sta. 180+50
Housatonic RR Crossing
Wildman Street
Sta. 21+50 to Sta. 24+50
(Omitted)
Proposed U/G
Transmission Lines
Middle River
Substation
CTDOT/Metro North RR
Crossing
Taylor Street
Sta. 15+00 to Sta. 16+50
(Omitted)
Triangle Substation
Danbury, CT
BECKETTVILLE
Danbury
West Lake Reservoir
Lake Kenosia Park
Ridgewood Country Club
CTown Supermarkets
Minas Carne & Deli
Western Connecticut State University
Danbury Railway Museum
Danbury Ice Arena
O'Brien's Irish Pub
Ethan Allen Hotel
Mill Plain Diner
Lakeview CT
Lake Ave Ext
Clapboard Ridge Rd
S King St
Osborne St
Rose St
Elm St
Beaver St
New St
Main St
White St
Division St
Park Ave
Deer Hill Ave
Triangle St
South St
Gisa Dias cleaning service
Image © 2025 Airbus
North

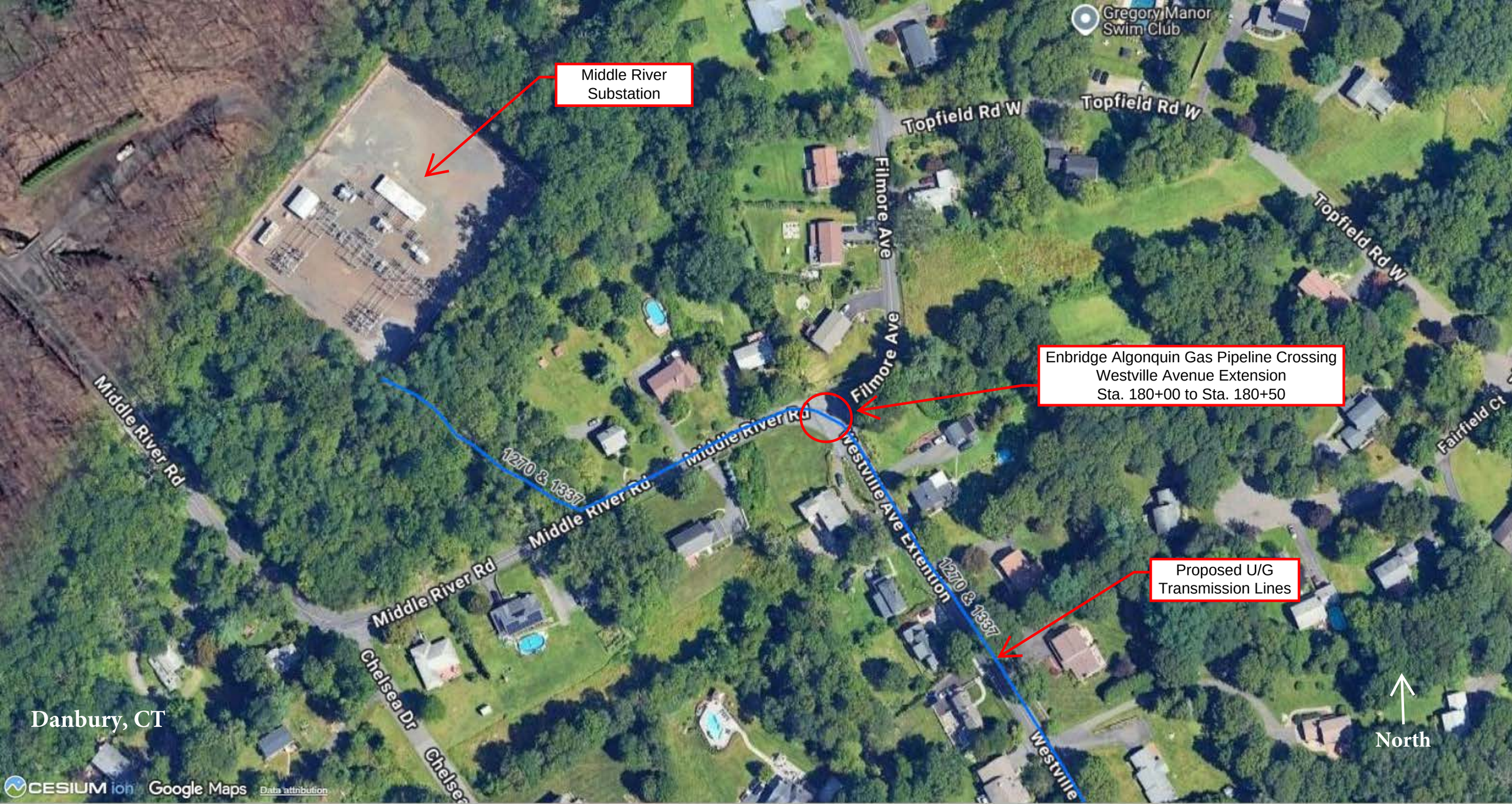
Middle River Substation
Gregory Manor Swim Club
Topfield Rd W
Topfield Rd W
Topfield Rd W
Filmore Ave
Filmore Ave
Enbridge Algonquin Gas Pipeline Crossing
Westville Avenue Extension
Sta. 180+00 to Sta. 180+50
Middle River Rd
Middle River Rd
Middle River Rd
Middle River Rd
1270 & 1337
Westville Ave Extension
1270 & 1337
Proposed U/G Transmission Lines
Fairfield Ct
Chelsea Dr
Danbury, CT
North
CESIUM ion
Google Maps
Data attribution

EXHIBIT B
LETTERS OF NO OBJECTION Required by RCSA §16-11-139(2)

Ivan Gapeev
Transmission Line Engineering
Eversource Energy
Hartford 56P,
56 Prospect St
Hartford, CT 06103

Subject: Connecticut Siting Council Petition No.1642
Danbury Underground Cable Modernization 115-kV Project
Approval for Crossing Utility Facilities

Dear Ivan Gapeev,

Algonquin Gas Transmission, LLC ("Algonquin"), has reviewed the proposed work associated with Eversource Underground Cable Modernization Program which includes the replacement of two 115-kV electric transmission lines crossing Algonquin's gas transmission facilities located near Middle River Road and Westville Avenue Extension, at approximately KP/MP 40.581, as shown on the drawings listed in Schedule A and the approved activities described in Schedule B of Crossing and Encroachment Consent No. LRCE0001-19152 (Rev. 1, March 2, 2023).

Based on review, Algonquin has no objection to the proposed method and manner of construction for the underground transmission lines near our infrastructure provided that all work is performed in accordance with all applicable local, state, and federal regulations and the National Electrical Safety Code (NESC), 2023 edition. This Letter of No Objection is issued for the specific crossings and construction activities described herein and does not relieve Eversource Energy or its contractors of responsibility for damage to existing facilities.

Eversource and its contractors shall coordinate with Algonquin and provide at least a week's notice of working near Algonquin's infrastructure including, but not limited to, Algonquin's 42-inch-diameter Mainline high-pressure natural-gas pipeline and/or Algonquin's 30-inch-diameter L30B high-pressure natural-gas pipeline. No excavation, crossing, backfilling or construction operations near the Algonquin high pressure natural gas pipelines shall be performed unless an Algonquin representative is on site. The Algonquin representative shall have full authority to stop the work if it is determined that the work is being performed in an unsafe manner or if a foreign object is spotted. Please call Algonquin area supervisor Stanley Drauss at 860-982-1798 to schedule standby.

Should you have any questions or require additional coordination, please contact Stanley Drauss**,** Area Supervisor at Stanley.Drauss@enbridge.com or 860-982-1798.

Best regards,

Stan Drauss 06/08/2026

Stanley Drauss
Area Supervisor
Algonquin Gas Transmission, LLC
Oxford, CT

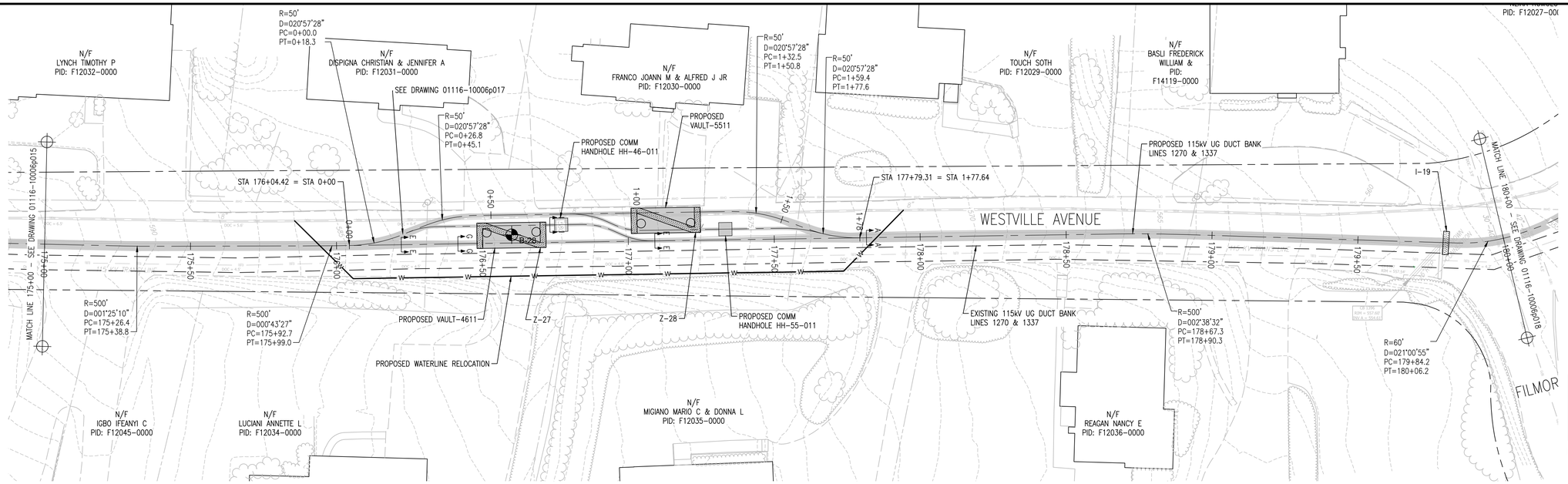

TRIANGLE SUBSTATION

MIDDLE RIVER SUBSTATION

VAULT 4611			
DESC	NORTHING	EASTING	DEPTH
S COR.	708196.88	798014.26	11.94
N COR.	708221.45	798008.64	11.94

DEPTH AT CENTER OF VAULT

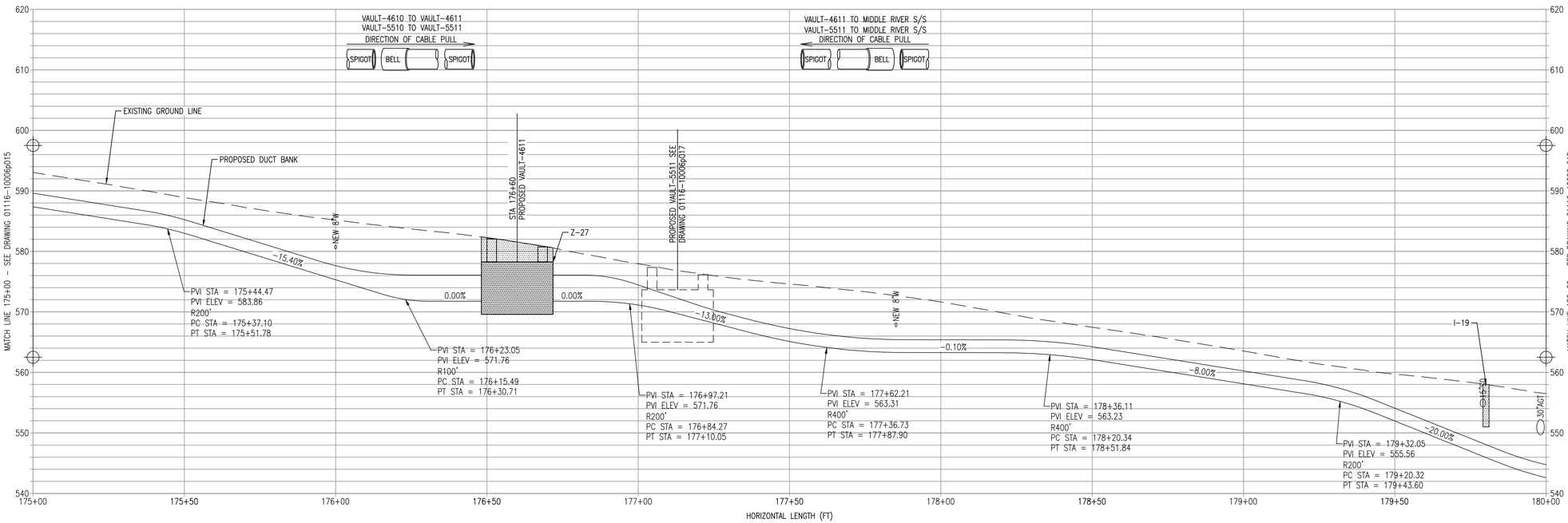

NOTES

1. THE UTILITIES SHOWN HEREON ARE BASED ON FIELD SURVEYS, AERIAL PHOTOGRAPHY, AND RECORD DOCUMENTS. OTHER FACILITIES MAY EXIST THAT WERE NOT DISCOVERED THROUGH THE RECORD CHECK. THE CONTRACTOR SHALL VERIFY THE EXACT LOCATION, BOTH HORIZONTAL AND VERTICAL, OF ALL UTILITIES THROUGH THE APPROPRIATE UTILITY COMPANIES. CALL BEFORE YOU DIG ~ 1-800-922-4455.
2. VERTICAL RADII SHALL BE 500' UNLESS NOTED OTHERWISE AND MAINTAIN A MINIMUM HORIZONTAL RADIUS OF 50' UNLESS NOTED OTHERWISE. CONTRACTOR SHALL NOT DEVIATE FROM STATED RADII WITHOUT ENGINEER WRITTEN APPROVAL.
3. DUCT BANK SHALL MAINTAIN A TYPICAL COVER DEPTH OF 3'-0" UNLESS OTHERWISE SHOWN ON DRAWINGS. MAINTAIN 2'-0" TYPICAL VERTICAL CLEARANCE OVER OR UNDER EXISTING UTILITIES AND MAINTAIN 2'-0" TYPICAL HORIZONTAL CLEARANCE FOR ADJACENT EXISTING UTILITIES SHOWN ON DRAWING UNLESS OTHERWISE SHOWN ON THE PLAN & PROFILE.
4. ASSUMED DEPTH OF NON-GRAVITY UTILITIES ARE:
   WATER: 4'-6"
   GAS: 3'-0"
   ELECTRIC: 3'-0"
   TELECOMMUNICATIONS: 3'-0"

CONSTRUCTION-ALL

REVISIONS DURING CONSTRUCTION					
0	08/25	ISSUED FOR CONSTRUCTION	DED	MLB	KGM

CBYD.COM 811 Call Before You Dig, Inc.

TRC

IT IS NOT POSSIBLE TO IDENTIFY EVERY HAZARD IN THE VICINITY OF THE WORK DEPICTED ON THIS DRAWING. ADDITIONALLY, FIELD CONDITIONS COULD CHANGE SIGNIFICANTLY BETWEEN THE DATE OF THIS DRAWING AND THE DATE OF CONSTRUCTION OR OTHER FIELD WORK. BEFORE STARTING WORK, CONTRACTOR IS RESPONSIBLE FOR VERIFYING ACTUAL FIELD CONDITIONS AND IDENTIFYING POTENTIALLY HAZARDOUS CONDITIONS AND CIRCUMSTANCES, INCLUDING OVERHEAD POWER LINES AND SUBSURFACE UTILITIES. CONTRACTOR IS ALSO RESPONSIBLE FOR COMPLYING WITH ALL APPLICABLE LAWS AND REGULATIONS, INCLUDING SAFETY REQUIREMENTS AND MARK-OUTS, PERTAINING TO THE WORK.

H-SCALE: 1" = 20'

V-SCALE: 1" = 10'

"FOR CURRENT EVERSOURCE PROPERTY RIGHTS, REFER TO PROPERTY RECORD MAPPING LOCATED IN THE T&D ROW AND SURVEY ENGINEERING DEPARTMENT"

NO.	DATE	AS BUILT REVISIONS	BY	CHK	APP	APP

EVERSOURCE ENERGY

TITLE
TRIANGLE S/S - MIDDLE RIVER S/S
115-kV TRANSMISSION LINE
UG PLAN & PROFILE STA. 175+00 TO STA. 180+00
DANBURY, CONNECTICUT

BY	SEK/TRC	CHKD	KGM/TRC	APP	IG/ES	APP	AK/ES
DATE	11/02/23	DATE	-	DATE	-	DATE	-
H-SCALE	1"=20'	SIZE	D	FIELD BOOK & PAGES			
V-SCALE	1"=10'	V.S.		R.E. DWG			
R.E. PROJ. NUMBER		80137159		DWG NO.	01116-10006p016		

ES VER. 05/2015

9/2/2025 10:22 AM - DDavis - C:\pwworkingemp\pw1\d7817998\01116-10006p016.dwg - Construction-All

ES VER. 05/2015

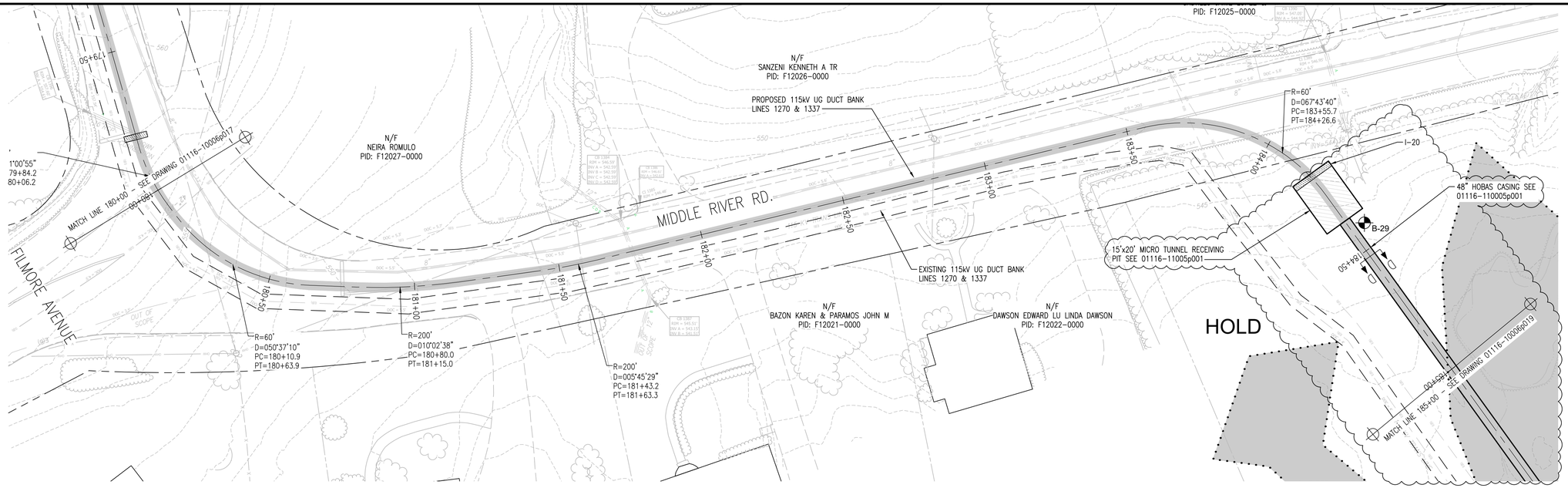

← TRIANGLE SUBSTATION

MIDDLE RIVER SUBSTATION →

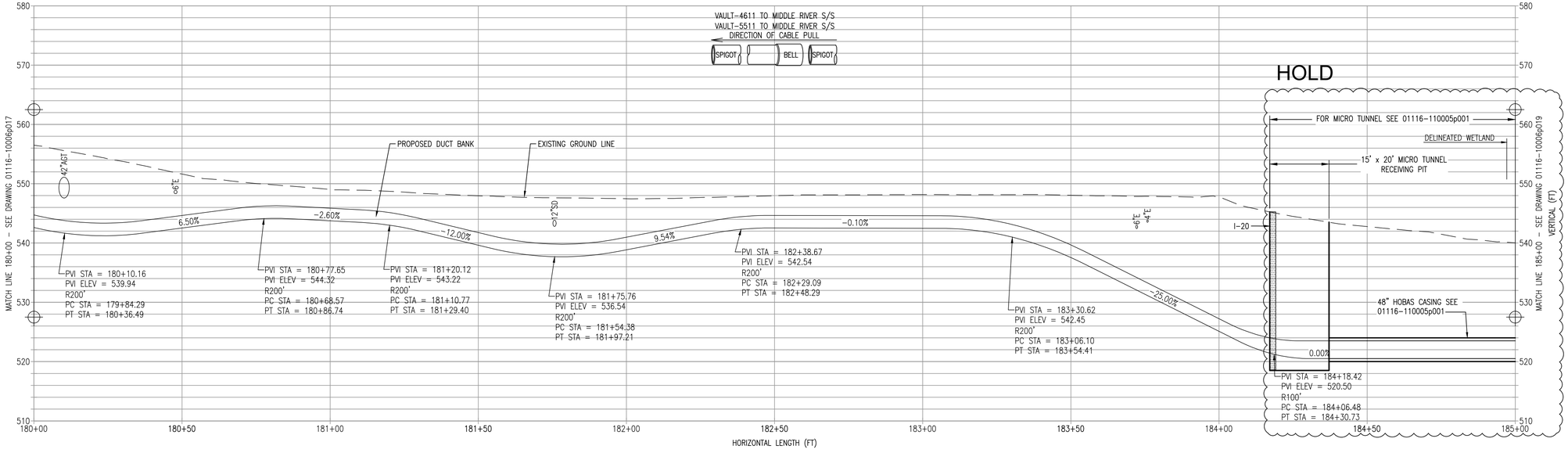

NOTES

1. THE UTILITIES SHOWN HEREON ARE BASED ON FIELD SURVEYS, AERIAL PHOTOGRAPHY, AND RECORD DOCUMENTS. OTHER FACILITIES MAY EXIST THAT WERE NOT DISCOVERED THROUGH THE RECORD CHECK. THE CONTRACTOR SHALL VERIFY THE EXACT LOCATION, BOTH HORIZONTAL AND VERTICAL, OF ALL UTILITIES THROUGH THE APPROPRIATE UTILITY COMPANIES. CALL BEFORE YOU DIG ~ 1-800-922-4455.
2. VERTICAL RADII SHALL BE 500' UNLESS NOTED OTHERWISE AND MAINTAIN A MINIMUM HORIZONTAL RADIUS OF 50' UNLESS NOTED OTHERWISE. CONTRACTOR SHALL NOT DEVIATE FROM STATED RADII WITHOUT ENGINEER WRITTEN APPROVAL.
3. DUCT BANK SHALL MAINTAIN A TYPICAL COVER DEPTH OF 3'-0" UNLESS OTHERWISE SHOWN ON DRAWINGS. MAINTAIN 2'-0" TYPICAL VERTICAL CLEARANCE OVER OR UNDER EXISTING UTILITIES AND MAINTAIN 2'-0" TYPICAL HORIZONTAL CLEARANCE FOR ADJACENT EXISTING UTILITIES SHOWN ON DRAWING UNLESS OTHERWISE SHOWN ON THE PLAN & PROFILE.
4. ASSUMED DEPTH OF NON-GRAVITY UTILITIES ARE:
   WATER: 4'-6"
   GAS: 3'-0"
   ELECTRIC: 3'-0"
   TELECOMMUNICATIONS: 3'-0"

CONSTRUCTION-ALL

REVISIONS DURING CONSTRUCTION					
0	08/25	ISSUED FOR CONSTRUCTION	DED	MLB	KGM

CBYD.COM 811 Call Before You Dig, Inc.

TRC

IT IS NOT POSSIBLE TO IDENTIFY EVERY HAZARD IN THE VICINITY OF THE WORK DEPICTED ON THIS DRAWING. ADDITIONALLY, FIELD CONDITIONS COULD CHANGE SIGNIFICANTLY BETWEEN THE DATE OF THIS DRAWING AND THE DATE OF CONSTRUCTION OR OTHER FIELD WORK. BEFORE STARTING WORK, CONTRACTOR IS RESPONSIBLE FOR VERIFYING ACTUAL FIELD CONDITIONS AND IDENTIFYING POTENTIALLY HAZARDOUS CONDITIONS AND CIRCUMSTANCES, INCLUDING OVERHEAD POWER LINES AND SUBSURFACE UTILITIES. CONTRACTOR IS ALSO RESPONSIBLE FOR COMPLYING WITH ALL APPLICABLE LAWS AND REGULATIONS, INCLUDING SAFETY REQUIREMENTS AND MARK-OUTS, PERTAINING TO THE WORK.

0 10' 20' (2' 4' 6' 8')
H-SCALE: 1" = 20'

0 5' 10' (1' 2' 3' 4')
V-SCALE: 1" = 10'

"FOR CURRENT EVERSOURCE PROPERTY RIGHTS, REFER TO PROPERTY RECORD MAPPING LOCATED IN THE T&D ROW AND SURVEY ENGINEERING DEPARTMENT"

NO.	DATE	AS BUILT REVISIONS	BY	CHK	APP	APP

EVERSOURCE ENERGY

TITLE
TRIANGLE S/S - MIDDLE RIVER S/S
115-kV TRANSMISSION LINE
UG PLAN & PROFILE STA. 180+00 TO STA. 185+00
DANBURY, CONNECTICUT

BY	SEK/TRC	CHKD	KGM/TRC	APP	IG/ES	APP	AK/ES
DATE	11/02/23	DATE	-	DATE	-	DATE	-
H-SCALE	1"=20'	SIZE	D	FIELD BOOK & PAGES			
V-SCALE	1"=10'	V.S.		R.E. DWG			
R.E. PROJ. NUMBER		80137159		DWG NO.		01116-10006p018	

9/2/2025 10:22 AM - DDavis - C:\pwworkingtemp\pw1\d7817898\01116-10006p018.dwg - Construction-All

Schedule B,
Approved Activity Information

Approved Activity Details

The activities in Table 1 and as described in this section are approved subject to the Consent and any additional terms and conditions as noted in this schedule.

Table 1: Approved Activity Information

Activity Information	Activity Identifier	Activity Identifier	Activity Identifier	Activity Identifier
Location				
Grantor pipeline number(s)	SEAS-OXFO/L30B/M/L			
Grantor KP and/or MP	40.581			
Short legal description	Middle River Rd and Westville Ave Ext			
GPS coordinates	41.403230, -73.486978			
Permanent				
Pipeline, Cable and/or Drainage Tile Crossing				
Grantee proposed facility being installed (pipeline, cable, other)	Cable			
Grantee material (steel, PVC, concrete, duct structure, HDPE)	Concrete incased duct bank			
Grantee pipe diameter and/or size of cable (NPS or mm)	See drawings			
Product conveyed (water, natural gas, oil or sewer)	Electric			
Surface/subsurface/ pipe rack	Subsurface			
Above/below Grantor's facility	Above/below			
Grantee method of installation (open cut, HDB, HDD, pipe rack)	Open cut 2 ft (0.6 m) HDD2 10 ft (3 m) HDB2 3 ft (1 m)			
Minimum clearance specified	Open cut 2 ft (0.6 m) HDD2 10 ft (3 m) HDB2 3 ft (1 m)			
Unsupported span	15ft			
Crossing angle	45-90 degrees			
Voltage (kV), if applicable	115kV			

Additional Terms and Conditions Specific to Approved Activities

Grantee's Pipeline or Cable Installation Either Above or Below Grantor's Facility(ies)

a) Grantee's Facility to be installed at an even elevation across the width of Grantor's right-of-way(s) except for gravity flow or HDD installations.

b) Have a tracer line, 3M Electronic Marker System (EMS) ball markers, Radio Frequency Identification (RFID) tags or other alternative locate marking method acceptable to industry, installed on Grantee's non-metallic underground facilities. Tracer wire to terminate at a location approved by Grantor's representative where still accessible for future locating purposes. Tracer wire to be secured at appropriate intervals to Grantee's underground pipeline.

c) Grantor's representative will determine, at the time of Grantee's installation, whether below grade markers (such as colored tape) or mechanical protection (such as concrete blocks) shall be required to be installed above Grantee's Facility in the Crossing Area.

d) Minimum clearance, as specified in the table above, to be maintained between Grantee's cable and Grantor's Facility. However, if applicable, if the diameter of Grantee's bore hole will be larger than Grantee's proposed Facility

then the minimum clearance, as specified in the table above, shall be maintained between Grantee's bore hole and Grantor's Facility.

e) Grantee shall install and maintain appropriate marker signs indicating Grantee's Facility location in the Crossing Area, as feasible. Proposed location(s) to be agreed to by Grantor's representative.

f) Grantee shall physically support Grantor's Facility if required, or as directed by Grantor, while any Work is being carried out hereunder.

EXHIBIT C
DRAWINGS
Required by RCSA §16-11-137(13)
(Location, depth and clearances of impacted utility and municipal facilities)

ES VER. 05/2015

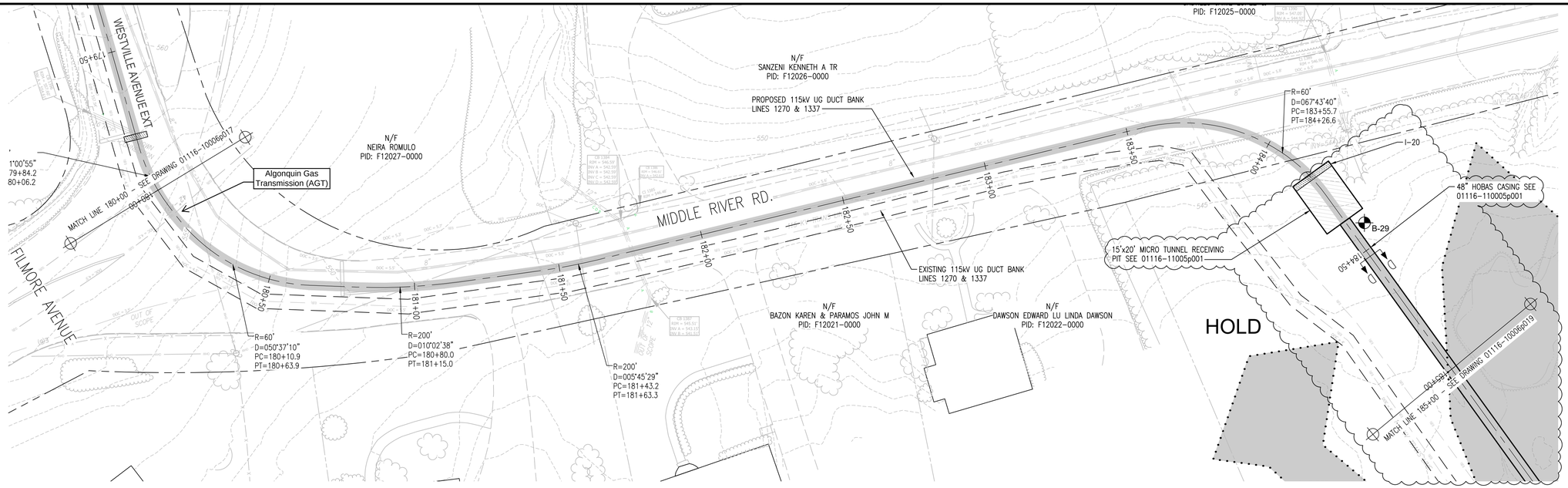

← TRIANGLE SUBSTATION

MIDDLE RIVER SUBSTATION →

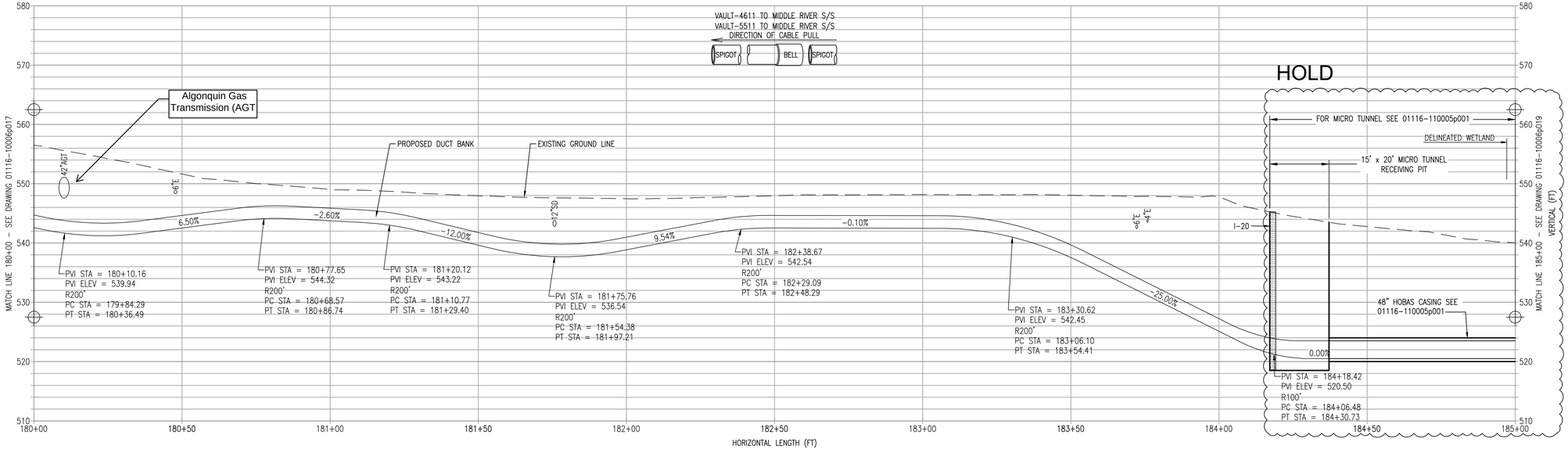

NOTES

1. THE UTILITIES SHOWN HEREON ARE BASED ON FIELD SURVEYS, AERIAL PHOTOGRAPHY, AND RECORD DOCUMENTS. OTHER FACILITIES MAY EXIST THAT WERE NOT DISCOVERED THROUGH THE RECORD CHECK. THE CONTRACTOR SHALL VERIFY THE EXACT LOCATION, BOTH HORIZONTAL AND VERTICAL, OF ALL UTILITIES THROUGH THE APPROPRIATE UTILITY COMPANIES. CALL BEFORE YOU DIG ~ 1-800-922-4455.
2. VERTICAL RADII SHALL BE 500' UNLESS NOTED OTHERWISE AND MAINTAIN A MINIMUM HORIZONTAL RADIUS OF 50' UNLESS NOTED OTHERWISE. CONTRACTOR SHALL NOT DEVIATE FROM STATED RADII WITHOUT ENGINEER WRITTEN APPROVAL.
3. DUCT BANK SHALL MAINTAIN A TYPICAL COVER DEPTH OF 3'-0" UNLESS OTHERWISE SHOWN ON DRAWINGS. MAINTAIN 2'-0" TYPICAL VERTICAL CLEARANCE OVER OR UNDER EXISTING UTILITIES AND MAINTAIN 2'-0" TYPICAL HORIZONTAL CLEARANCE FOR ADJACENT EXISTING UTILITIES SHOWN ON DRAWING UNLESS OTHERWISE SHOWN ON THE PLAN & PROFILE.
4. ASSUMED DEPTH OF NON-GRAVITY UTILITIES ARE:
   WATER: 4'-6"
   GAS: 3'-0"
   ELECTRIC: 3'-0"
   TELECOMMUNICATIONS: 3'-0"

CONSTRUCTION-ALL

REVISIONS DURING CONSTRUCTION					
0	08/25	ISSUED FOR CONSTRUCTION	DED	MLB	KGM

CBYD.COM 811 Call Before You Dig, Inc.

TRC

IT IS NOT POSSIBLE TO IDENTIFY EVERY HAZARD IN THE VICINITY OF THE WORK DEPICTED ON THIS DRAWING. ADDITIONALLY, FIELD CONDITIONS COULD CHANGE SIGNIFICANTLY BETWEEN THE DATE OF THIS DRAWING AND THE DATE OF CONSTRUCTION OR OTHER FIELD WORK. BEFORE STARTING WORK, CONTRACTOR IS RESPONSIBLE FOR VERIFYING ACTUAL FIELD CONDITIONS AND IDENTIFYING POTENTIALLY HAZARDOUS CONDITIONS AND CIRCUMSTANCES, INCLUDING OVERHEAD POWER LINES AND SUBSURFACE UTILITIES. CONTRACTOR IS ALSO RESPONSIBLE FOR COMPLYING WITH ALL APPLICABLE LAWS AND REGULATIONS, INCLUDING SAFETY REQUIREMENTS AND MARK-OUTS, PERTAINING TO THE WORK.

0 10' 20' (2' 4' 6' 8')
H-SCALE: 1" = 20'

0 5' 10' (1' 2' 3' 4')
V-SCALE: 1" = 10'

"FOR CURRENT EVERSOURCE PROPERTY RIGHTS, REFER TO PROPERTY RECORD MAPPING LOCATED IN THE T&D ROW AND SURVEY ENGINEERING DEPARTMENT"

NO.	DATE	AS BUILT REVISIONS	BY	CHK	APP	APP

EVERSOURCE ENERGY

TITLE
TRIANGLE S/S - MIDDLE RIVER S/S
115-kV TRANSMISSION LINE
UG PLAN & PROFILE STA. 180+00 TO STA. 185+00
DANBURY, CONNECTICUT

BY	SEK/TRC	CHKD	KGM/TRC	APP	IG/ES	APP	AK/ES
DATE	11/02/23	DATE	-	DATE	-	DATE	-
H-SCALE	1"=20'	SIZE	D	FIELD BOOK & PAGES			
V-SCALE	1"=10'	V.S.		R.E. DWG			
R.E. PROJ. NUMBER		80137159		DWG NO.		01116-10006p018	

9/2/2025 10:22 AM - DDavis - C:\pwworkingtemp\pw1\d7817898\01116-10006p018.dwg - Construction-All

ES VER. 05/2015

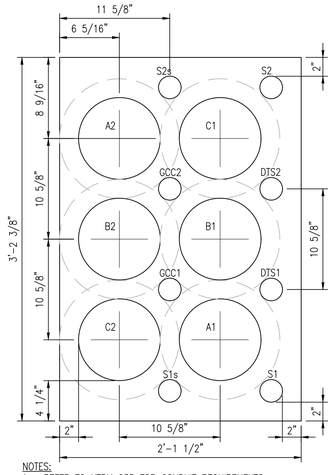

NOTES:
1. REFER TO UTRM 235 FOR CONDUIT REQUIREMENTS
2. SCHEDULE 40 PVC REQUIRED UNLESS APPROVED IN WRITING BY EVERSOURCE

CIRCUIT 1270 = 1
CIRCUIT 1337 = 2

SECTION B–B
TWO CIRCUIT DUCTBANK
SCALE: N.T.S.

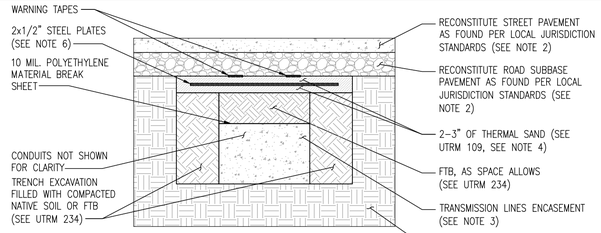

NOTES:
1. SEE UTRM 077 FOR REQUIRED SEPARATION OF OTHER UTILITIES.
2. ROAD AND SUBBASE THICKNESSES TO BE FIELD VERIFIED ON PROJECT.
3. CONCRETE ENCASEMENT (SEE UTRM 234) SHALL BE USED UNLESS THERMAL SAND (SEE UTRM 109) APPROVED BY EVERSOURCE.
4. THERMAL SAND MAY BE OMITTED IF NOT IN CONTACT WITH A SOLID LAYER (e.g. CONCRETE) UPON APPROVAL FROM EVERSOURCE.
5. FLUIDIZED THERMAL BACKFILL (FTB) MAY BE REPLACED BY THERMAL SAND UPON APPROVAL FROM EVERSOURCE.
6. STEEL PLATES TO BE PLACED ON TOP OF EACH OTHER WITH NO TWO JOINTS OVERLAPPED. STEEL PLATE SHALL OVERHANG ENCASEMENT BY NO LESS THAN 6" ON EACH SIDE.
7. AMPACITY ANALYSIS SHALL BE DONE CONSIDERING NON-UNIFORM GROUND SURFACE TEMPERATURE AND IMPACT OF STEEL PLATES.
8. ADDITIONAL STRUCTURAL ANALYSIS AND CONSIDERATIONS ARE REQUIRED TO BE MADE WHERE BELOW CONDITIONS ARE PRESENT:
   - 8.1. INSTALLATION WHERE UNSUITABLE MATERIAL WITH LOW BEARING CAPACITY IS ENCOUNTERED AT OR BELOW BOTTOM OF THE DUCT BANK.
   - 8.2. BOTTOM OF THE CONCRETE DUCT BANK IS LOCATED ABOVE FROST DEPTH.
   - 8.3. DUCT BANK SPANNING OVER EXISTING FACILITIES WITH UNSUPPORTED CLEAR SPAN ABOVE SPECIFIED ALLOWABLE.

CROSS-SECTIONAL DRAWING
SHALLOW (<30" COVER) TRANSMISSION INSTALLATION
SCALE: N.T.S.

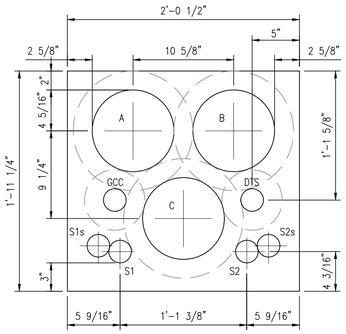

NOTES:
1. REFER TO UTRM 235 FOR CONDUIT REQUIREMENTS
2. SCHEDULE 40 PVC REQUIRED UNLESS APPROVED IN WRITING BY EVERSOURCE

CIRCUIT 1270 = 1
CIRCUIT 1337 = 2

SECTION C–C
SINGLE CIRCUIT DUCTBANK
SCALE: N.T.S.

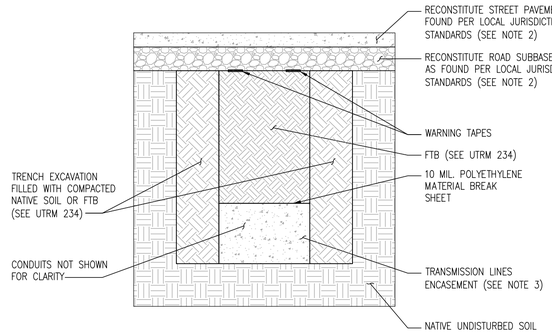

NOTES:
1. SEE UTRM 077 FOR REQUIRED SEPARATION OF OTHER UTILITIES.
2. ROAD AND SUBBASE THICKNESSES TO BE FIELD VERIFIED ON PROJECT.
3. CONCRETE ENCASEMENT (SEE UTRM 234) SHALL BE USED UNLESS THERMAL SAND (SEE UTRM 109) APPROVED BY EVERSOURCE.

CROSS-SECTIONAL DRAWING
TYPICAL (≥30" COVER) TRANSMISSION INSTALLATION
SCALE: N.T.S.

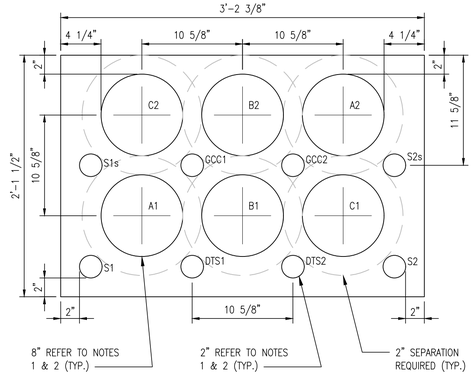

NOTES:
1. REFER TO UTRM 235 FOR CONDUIT REQUIREMENTS
2. SCHEDULE 40 PVC REQUIRED UNLESS APPROVED IN WRITING BY EVERSOURCE

CIRCUIT 1270 = 1
CIRCUIT 1337 = 2

CROSS SECTION A–A
TWO CIRCUIT DUCTBANK
SCALE: N.T.S.

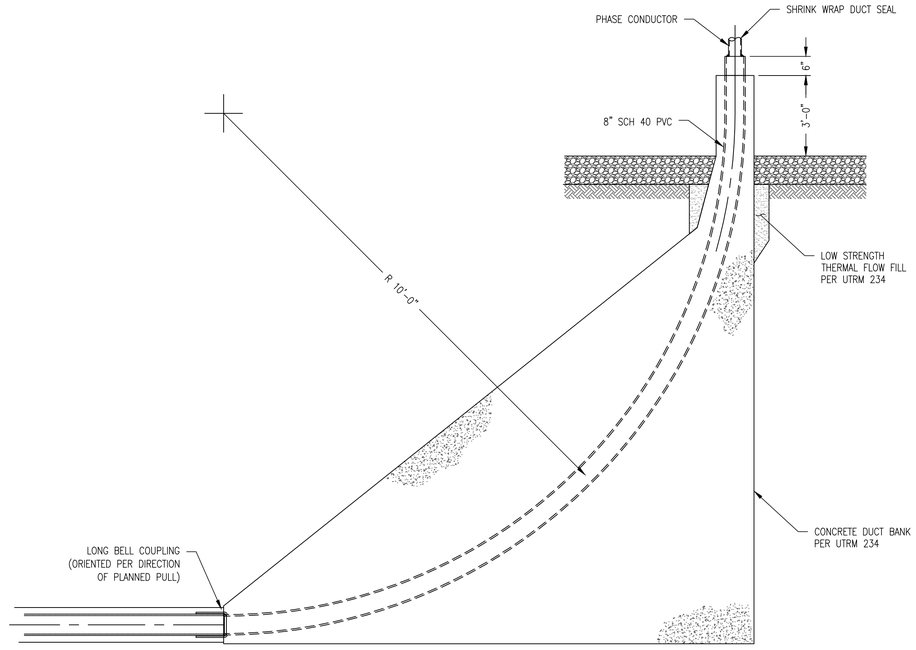

TYPICAL RISER SWEEP DETAIL
SCALE: N.T.S.

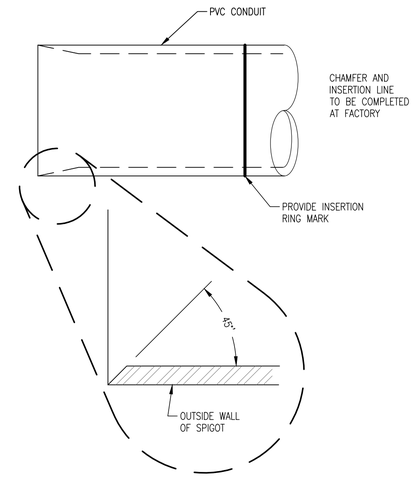

SPIGOT DETAIL
SCALE: N.T.S.

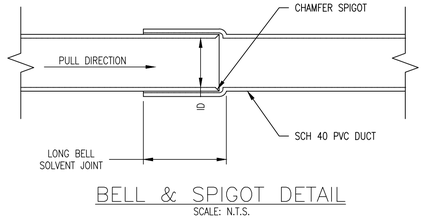

BELL & SPIGOT DETAIL
SCALE: N.T.S.

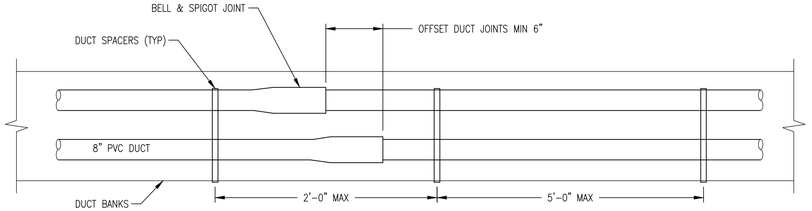

NOTES:
1. INSTALL DUCT SPACERS PER EVERSOURCE UTRM 235
2. DUCT SPACER ASSEMBLY AND HARDWARE SPECIFICATIONS SHALL BE ADVANCE PRODUCTS & SYSTEMS DRAWING DBS-0802-39X26-2 OR EVERSOURCE APPROVED EQUAL.

DUCT SPACER DETAIL
SCALE: N.T.S.

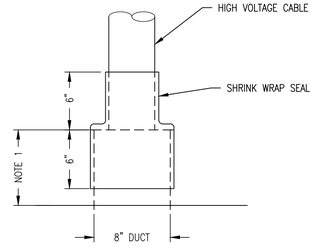

DUCT SEALING DETAIL
SCALE: N.T.S.

NOTES:
1. CUT DUCT SQUARE 6 TO 8 INCHES ABOVE CONCRETE.
2. CENTER CABLE IN DUCT AND APPLY SHRINK WRAP SEAL. SEAL SHALL EXTEND MIN 6" ONTO CABLE AND DUCT.
3. SHRINK WRAP TO BE APPLIED PER MANUFACTURER'S WRITTEN INSTRUCTIONS.
4. 115KV DUCT AND CABLE SHOWN, OTHERS TO BE SEALED SIMILARLY.
5. SHRINK WRAP ON COMMUNICATIONS DUCT TO BE APPLIED ABOVE INNERDUCT TERMINATION ELEVATION.

CONSTRUCTION-ALL

NO.	DATE	AS BUILT REVISIONS	BY	CHK	APP	APP

REVISIONS DURING CONSTRUCTION

0	08/25	ISSUED FOR CONSTRUCTION	DED	MLB	KGM

EVERSOURCE ENERGY

TITLE: TRIANGLE S/S - MIDDLE RIVER S/S
115-kV TRANSMISSION LINE
DUCT BANK DETAILS
DANBURY, CONNECTICUT

BY	KLR/TRC	CHKD	DMC/TRC	APP	IG/ES
DATE	11/02/23	DATE	–	DATE	–
H-SCALE	AS NOTED	SIZE	D	FIELD BOOK & PAGES	
V-SCALE	N/A	V.S.		R.E. DWG	
R.E. PROJ. NUMBER	80137159			DWG NO.	01116-48000p001

CBYD.COM 811 Call Before You Dig, Inc.

TRC

8/28/2025 8:29 AM – DDavis – C:\pwworkingemp\pw1\d7817898\01116-48000p001.dwg – Construction-All

ES VER: 05/2015

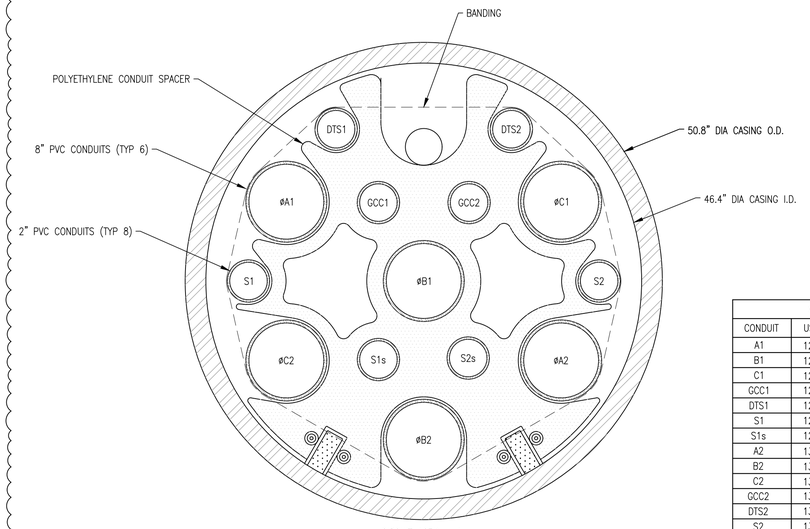

ID	X	Y
A1	−14.6250	25.3312
A2	14.6250	8.4438
B1	0.0000	16.8875
B2	0.0000	0.0000
C1	14.6250	25.3313
C2	−14.6250	8.4437

CONDUIT IDENTIFICATION TABLE	
CONDUIT	USE
A1	1270 LINE "A" PHASE
B1	1270 LINE "B" PHASE
C1	1270 LINE "C" PHASE
GCC1	1270 LINE GROUND CONTINUITY CONDUCTOR
DTS1	1270 LINE DISTRIBUTED TEMPERATURE SENSING
S1	1270 LINE FIBER COMMUNICATION
S1s	1270 LINE FIBER SPARE
A2	1337 LINE "A" PHASE
B2	1337 LINE "B" PHASE
C2	1337 LINE "C" PHASE
GCC2	1337 LINE GROUND CONTINUITY CONDUCTOR
DTS2	1337 LINE DISTRIBUTED TEMPERATURE SENSING
S2	1337 LINE FIBER COMMUNICATION
S2s	1337 LINE FIBER SPARE

CIRCUIT 1270 = 1
CIRCUIT 1337 = 2

SECTION D–D
TRENCHLESS CASING CROSS SECTION
SCALE: N.T.S.

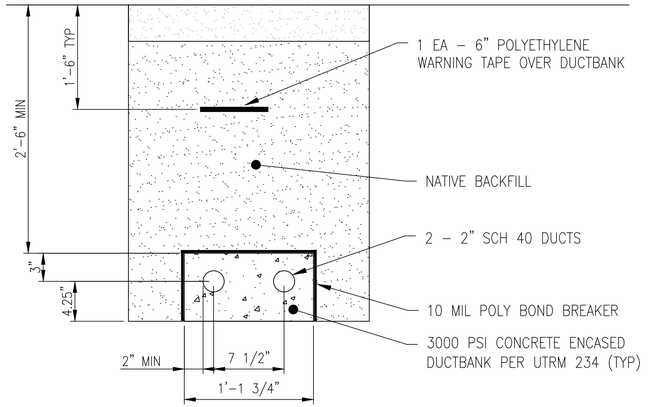

SECTION I–I
COMM DUCTBANK
SCALE: N.T.S.

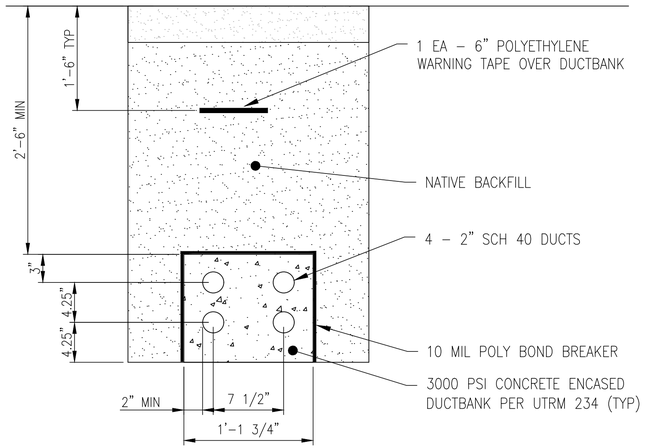

SECTION J–J
COMM DUCTBANK
SCALE: N.T.S.

HOLD

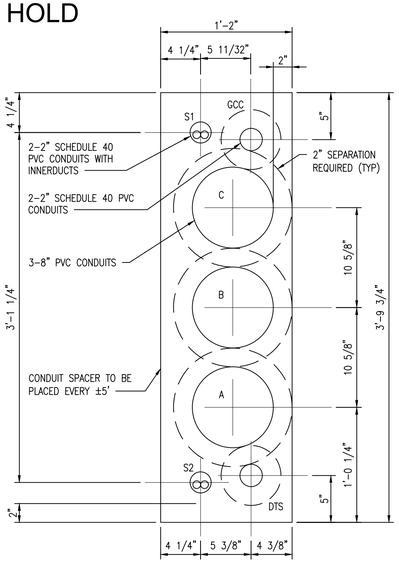

CIRCUIT 1270

SECTION E–E
SINGLE CIRCUIT 1270 VERTICAL DUCTBANK
SCALE: N.T.S.

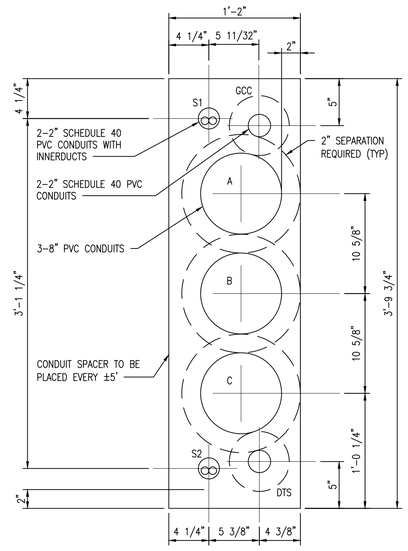

CIRCUIT 1337

SECTION F–F
SINGLE CIRCUIT 1337 VERTICAL DUCTBANK
SCALE: N.T.S.

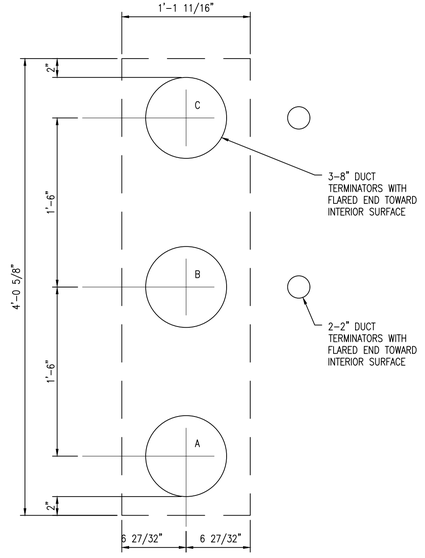

CIRCUIT 1270

SECTION G–G
SINGLE CIRCUIT 1270 MANHOLE APPROACH
SCALE: N.T.S.

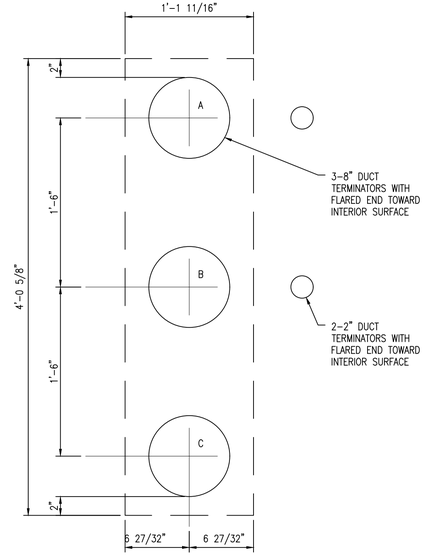

CIRCUIT 1337

SECTION H–H
SINGLE CIRCUIT 1337 MANHOLE APPROACH
SCALE: N.T.S.

CONSTRUCTION-ALL

REVISIONS DURING CONSTRUCTION					
0	08/25	ISSUED FOR CONSTRUCTION	DED	MLB	KGM

NO.	DATE	AS BUILT REVISIONS	BY	CHK	APP	APP

EVERSOURCE ENERGY

TITLE
TRIANGLE S/S - MIDDLE RIVER S/S
115-kV TRANSMISSION LINES 1270 & 1337
DUCT BANK CROSS SECTIONS
DANBURY, CONNECTICUT

BY	KLR/TRC	CHKD	DMG/TRC	APP	IG/ES	APP	AK/ES
DATE	11/02/23	DATE	–	DATE	–	DATE	–
H-SCALE	AS NOTED	SIZE	D	FIELD BOOK & PAGES			
V-SCALE	N/A	V.S.		R.E. DWG			
R.E. PROJ. NUMBER	80137159			DWG NO.	01116-48000p002		

CBYD.COM 811 Call Before You Dig, Inc.

TRC

8/28/2025 2:37 PM – DDavis – C:\ewworkingempl\per\d78178981\01116-48000p002.dwg – Construction-All