Broadcast Pix

Proposal Date: 2026-10-30
Project Ref: P185318
Quote Ref: QUO497
Currency: USA, Dollars (USD)
Organization: Nutmeg TV

Bill To:	Shipping Address:	Customer Contact:
Chris Bennett 9 Eastview Dr. Farmington Connecticut US	Chris Bennett 9 Eastview Dr. Farmington Connecticut US	Nutmeg TV Chris Bennett cbennett@nutmegtv.com +1860.321.7405 ext. 2323 **Broadcast Pix Registered Office:** Broadcast Pix, Inc. 141 Middlesex Road, Units 1&2, Tyngsboro, Massachusetts 01879 USA

Description:	Conditions: All quotes are valid for 30 days Payment Terms: Custom

Nutmeg TV - ONix Pro Control Panel Upgrade

Item Code	Item Description	List Price ($)	Quantity	Total ($)
ONIX U/G	**ONIX Pro Control Panel - Upgrade** *each* Upgrade from existing switcher panel to the new ONix Control Pro Control Panel is a professional hardware control surface designed for hands-on operation of Broadcast Pix integrated production switchers. The panel features a 5.5-inch LCD display for system navigation and status monitoring, along with 80 programmable tri-color backlit buttons for switching functions, macros, and system control. A precision aluminum alloy T-BAR fader enables smooth manual transitions, while an integrated 4D joystick provides PTZ camera control. Connectivity includes RJ45 (LAN), USB, RS-232, and RS-422/485 interfaces. The panel supports wired Tally output, with optional wireless Tally support. Designed for indoor use, the ONix Control Pro weighs 6.8 kg and operates in environments from -10°C to 40°C. Overall dimensions are 565 (L) × 297 (W) × 130 (H) mm (including T-bar height) , or 22.2 × 11.7 × 5.1 inches .	5,495	1	5,495
BP-Support-3YR	**3 Year Support and Warranty Agreement** per Project 3 Years: This extended term support contract provides advanced hardware replacement. Software warranty, enhancements & bug fixes. Priority E-mail, telephone & remote support. 3 year subscription to BPNet Remote Control. New Hybrid Systems Only. (Includes Upgrades to Hybrid Models)	1,950	1	1,950
614	**Shipping (US only) - Bpix 1ME 1000 panel**	75	1	75
CONTROL PANEL UPGRADE Subtotal				**7,520**

Items Total	7,520
Shipping and Handling	0
GRAND TOTAL($)	**7,520**

Quotation: AQQ002308

Prepared by: Neil Hutchins
Tel: +44 (0) 118 324 0404 ext 202

Email: neil.hutchins@aq-broadcast.com

aQ Broadcast Limited

Description:	New two-port aVS Video Server for Nutmeg TV (as replacement for existing, ten-year old unit), including remote technical support for three years
Date:	2 October 2026
Customer:	Nutmeg Public Access TV
Contact:	Chris Bennett
Address:	9 Eastview Drive, Farington, CT 06032 USA
Telephone:	(860) 321 7405 ext 2323
Email:	cbennet@nutmegtv.com
End User:	Nutmeg Public Access TV

Quote Items Subtotal:	25,125.00		
Sub Total:	25,125.00		
Total:	**25,125.00**		
Currency:	**USD $**		
Tax/VAT:	0.00	**Updated:**	02/10/2026 15:05:25
Total including Tax/VAT:	25,125.00	**Updated by:**	Neil Hutchins

Quote Items

Part Code	Item	Qty	List Price	Subtotal	Discount	Item Total
AQVS42042DM0	**aQ Video Server, gen4, Hybrid, two-port SD/HD, embedded audio, mid-range (MR), 6 TB (approx, usable), single PSU** Latest generation aVS Video Server 2RU with single PSU Two ports (each with SDI input and output connections), alternatively configurable as four independent SDI channels – all SDI video with embedded audio Minimum 6TB usable storage H.264 codec option for recording (playback included by default) Includes one year of return to base hardware warranty, from date of dispatch Includes three years of remote technical support cover and firmware upgrade cover, from date of dispatch	1	33,500.00	33,500.00	25 %	25,125.00
	Category Totals:			33,500.00		25,125.00
	Total Discounted Quote:		**25,125.00**	USD $		
	Tax / VAT:		0.00			
	Total including Tax / VAT:		25,125.00	USD $		

Delivery charges will be approximately USD $799 excluding applicable taxes / duties, but will be confirmed during the order process.

Payment Terms

Credit Terms: 30 days from date of invoice
(USD $)

All prices quoted excluding tax, duty and delivery in the currency specified
Price quoted strictly to the company specified
Valid only in the components and quantities specified
Valid for 15 days from proposal date

AQ BROADCAST LIMITED
5 Wayland Close, Bradfield, Reading, Berkshire, RG7 6AG, UK
Telephone - UK: +44 (0) 118 324 0404 | US: +1 508 784 1355
Email: sales@aq-broadcast.com | Web: www.aq-broadcast.com
Registered in England No: 08669745 | VAT Registration Number: GB 173 9934 63

TELVUE

WE SHARE YOUR VISION™

TELVUE CORPORATION
16000 HORIZON WAY, SUITE 100
MT. LAUREL, NJ 08054

Quote#: Q-019746
Quote Issued: 11/3/2026
Quote Expiration: 3/31/2027

TelVue Quotation – Confidential	TelVue Contact Information
Prepared for: Chris Bennett Nutmeg TV Technology Director cbennett@nutmegtv.com (860) 321-7405 x23 Ship to address: 9 Eastview Drive Farmington, CT 06032	Prepared by: Florence DelSanto TelVue Corporation Email: fdelsanto@telvue.com Phone: (856) 273-8888 Fax: Please use Fax No. to submit signed quote, or email orders@telvue.com

Special Terms
*Prior to signing the quote in indication of your acceptance as a purchase order, please confirm the billing contact information and shipping information above. *If you have any questions please contact your TelVue contact (identified above).

Customer Acceptance
This quote is good for 30 days from date of issue or until any expiration date stated in the special terms field. By signing below, customer accepts quote as purchase order on the above terms: Printed Name: _____ Title: _____ Signature: _____ Date: _____

Thank you for your business. The following page contains a quote for TelVue products and services.

TELVUE
WE SHARE YOUR VISION™

TELVUE CORPORATION
16000 HORIZON WAY, SUITE 100
MT. LAUREL, NJ 08054

Quote#: Q-019746
Quote Issued: 11/3/2026
Quote Expiration: 3/31/2027

Hardware

Qty.	Item Name	Description	TC Elig.	List Price	Discount	Sales Price	Unit Net Price	Ext. Net Price
AIO Series								
4	Simulcast Channel	Native HD/SD Simulcast for HyperCaster AIOs. Pairs a 2nd output port to a primary with proper video & graphics scaling. Eliminates expensive downstream up/down-converters, complex AFD workflows, and problems such as double conversion and postage stamping.	✓	$995.00	75.00%	$995.00	$248.75	$995.00
1	HyperCaster AIO B2000-12X+	All-in-One Digital Broadcast Video Server. 12 HD-SDI ports, 8 playback or encode I/Os standard, expandable to 20, MAX 12 Playback. SDI & IP Switching, Graphics, Scheduling & Automation. 2RU, Redundant Power, 11TB RAID6.	✓	$44,950.00	20.00%	$44,950.00	$35,960.00	$35,960.00
								$36,955.00

Software

Qty.	Item Name	Description	TC Elig.	List Price	Discount	Sales Price	Unit Net Price	Ext. Net Price
4	AIO-Streaming-Enc	Streaming output license for AIO channel. H.264 HD/SD, AAC audio. SRT, RTMP, HLS with Adaptive Bit Rate. Up to 5 simultaneous destinations, control manually or via Streaming Automation Rules. Supports CloudCast, Social Media, CDNs and more.	✓	$2,495.00	10.00%	$2,495.00	$2,245.50	$8,982.00
AIO Series								
4	Loudness Pro	Professional, real-time Loudness Control plugin for ProVue and AIO channels. Pro Broadcast and Streaming presets including CALM. Industry leading audio processing engine from Linear Acoustic.	✓	$995.00	50.00%	$995.00	$497.50	$1,990.00
B-Series Optional Items								

TELVUE

WE SHARE YOUR VISION™

TELVUE CORPORATION
16000 HORIZON WAY, SUITE 100
MT. LAUREL, NJ 08054

Quote#: Q-019746
Quote Issued: 11/3/2026
Quote Expiration: 3/31/2027

Software

Qty.	Item Name	Description	TC Elig.	List Price	Discount	Sales Price	Unit Net Price	Ext. Net Price
1	HyperCaster IP Capture	Option - Capture HD/SD IP streams on schedule or manually and store as a file for playback or transfer to another device. MPEG-2 TS unicast/multicast/SSM, RTMP, HLS (single rate). Max 2 Captures on B100 and 4 Captures on B1000.	✓	$1,500.00	100.00%	$1,500.00	$0.00	$0.00
1	STD-SW-CTRL	Option - Switcher Control Software, Supported Switcher	✓	$500.00	100.00%	$500.00	$0.00	$0.00
								$10,972.00

Cloud Services

Qty.	Item Name	Description	TC Elig.	List Price	Discount	Sales Price	Unit Net Price	Ext. Net Price
CloudCast								
1	Connect - ABR 3 Rate VOD Transcoding	Video-On-Demand (VOD) 3 rate adaptive bit rate (ABR), 720p max. Billed Annually./TPCL		$600.00	100.00%	$600.00	$0.00	$0.00
Connect								
1	Connect - Broadcast Workflow	Requires Basic Connect CMS. Adds one SD broadcast preset, 250GB/mo transcoding processing, download, automatic Broadcast Server Distribution, 1 Channel. Billed Annually,/TPCL		$1,800.00	10.00%	$1,800.00	$1,620.00	$1,620.00
1	Connect - CMS	Includes Uploads, 100GB storage, 10 users. APIs. Billed Annually./TPCL		$1,200.00	10.00%	$1,200.00	$1,080.00	$1,080.00
1	Connect - Media Exchange	Single User. 25GB. MPEG-2 PS SD only. No uploads. No Broadcast Servers. No Channels. Manual Download Only. No API./TPCL		$0.00	100.00%	$0.00	$0.00	$0.00
1	Connect - HD Transcoding	TelVue Connect™ Cloud-based HD MPEG2 & H.264 Transcoding, Per Year. Includes 50GB per month. $5/GB additional transcoding./TPCL		$1,200.00	10.00%	$1,200.00	$1,080.00	$1,080.00
1	Connect - Start Up	Hosted Video Contribution Service - One-time Account Set-up./TPCL		$1,000.00	100.00%	$1,000.00	$0.00	$0.00

TELVUE

WE SHARE YOUR VISION™

TELVUE CORPORATION
16000 HORIZON WAY, SUITE 100
MT. LAUREL, NJ 08054

Quote#: Q-019746
Quote Issued: 11/3/2026
Quote Expiration: 3/31/2027

Cloud Services

Qty.	Item Name	Description	TC Elig.	List Price	Discount	Sales Price	Unit Net Price	Ext. Net Price
1	Connect - CloudCast/Streaming Workflow	Requires Basic Connect CMS. Adds 720p HD SBR VOD preset, 1 VOD Player. 250GB/mo transcoding processing, 250GB CDN/month, additional 250GB storage. Includes Live Streaming. Billed Annually./TPCL		$1,800.00	10.00%	$1,800.00	$1,620.00	$1,620.00
								$5,400.00

Other

Qty.	Item Name	Description	TC Elig.	List Price	Discount	Sales Price	Unit Net Price	Ext. Net Price
1	Trade-In Credit	Credit For Trade-in Equipment./TPCL		$0.00		($6,000.00)	($6,000.00)	($6,000.00)
1	Trade-In Notes	This quote is only available directly from TelVue due to Trade-in value being given. Trade-in Credit will be invoiced if the hardware is not returned. Customer is responsible for proper packaging and return shipping./TPCL		$0.00		$0.00	$0.00	$0.00
								($6,000.00)

Shipping & Handling

Qty.	Item Name	Description	TC Elig.	List Price	Discount	Sales Price	Unit Net Price	Ext. Net Price
AIO Series								
1	HyperCaster AIO B2000 Shipping	Shipping charge for HyperCaster-AIO B2000./TPCL		$250.00		$250.00	$250.00	$250.00
							Sub-total	$250.00

Installation and Training Services

Qty.	Item Name	Description	TC Elig.	List Price	Discount	Sales Price	Unit Net Price	Ext. Net Price
Support								
2	Installation Services	Daily Installation Rate. Travel & Living Expenses are additional./TPCL		$1,500.00	30.00%	$1,500.00	$1,050.00	$2,100.00
							Sub-total	$2,100.00

TELVUE
WE SHARE YOUR VISION™

TELVUE CORPORATION
16000 HORIZON WAY, SUITE 100
MT. LAUREL, NJ 08054

Quote#: Q-019746
Quote Issued: 11/3/2026
Quote Expiration: 3/31/2027

General Services

Qty.	Item Name	Description	TC Elig.	List Price	Discount	Sales Price	Unit Net Price	Ext. Net Price
Support								
1	TELVUE CARE Through Year 5	TelVue Care warranties for 5 years TelVue hardware and provides on-going access to on-line software upgrades and basic application feature enhancements. A $500 reactivation fee will apply to a lapsed TelVue Care warranty./TPCL		$0.00		$19,317.00	$19,317.00	$19,317.00

Sub-total $19,317.00

Grand Total $68,994.00

A finance / late fee of 1% per month will be added to an unpaid balance each month thereafter. Purchases of equipment outside of the United States require advance payment or letter of credit.

Net 30 Days. 2% cash/1% net 15. Credit cards are accepted.





$1,250.00

Buy now, pay later with PayPal. Learn more

Talent Monitor Bracket Kit for All Prompter People Model Teleprompters

SKU: TM-Bracket-KIT-18

PROMPTER PEOPLE

(No reviews yet) Write a Review

Add-on Monitor: *

- ○ No Monitor
- ○ 15.6" Regular (3G-SDI/HDMI/VGA) 16:9
- ● 18.5" Regular (3G-SDI/HDMI/VGA) 16:9
- ○ 21.5' Regular (3G-SDI/HDMI/VGA) 16:9
- ○ 24" Regular (3G-SDI/HDMI/VGA) 16:9

Teleprompter Model: *

Flex Plus, ProLine Plus, Prompter Pal Plus, UltraFlex Plus | Q Gear Pro, Robo, Robo JR, Robo JR Max

Quantity: 1

ADD TO CART BUY NOW

Description Info Specifications

The PrompterPeople Talent Monitor bracket is easy to assemble and works with all of these models

- ProLine Plus
- Flex Plus
- Prompter Pal | Prompter Pal Pro Models
- Q-Gear Pro (15 | 17 | 19 | 24 | 32)
- Works with - Robo
- Works with - Robo Jr.
- Works with - Robo Jr. Max
- Works with Legacy Models: ProLine, Flex, UltraFlex, and UltraFlex Plus

Video Chat with a Pro Video Expert - Live | Chat Now

Vinten Osprey Lite 2-Stage Steering Pedestal with PTZ Adapter

BH #VIPTZOL • MFR #PTZ-OL | Share | Print

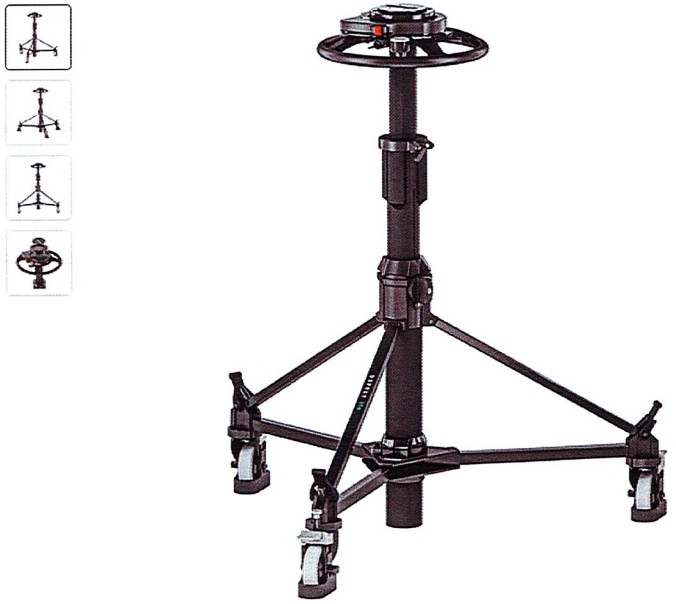

Special Order | Expected availability: 2-4 Weeks | No Store Display

$9,590.25 +

Save the Tax‡
or Pay **$800/mo.** suggested payments for 12 Mos.§ when you use the **Payboo** credit card.
Learn More

This item cannot be canceled or returned.

1 | Add to Cart

Free Standard Shipping

Protect Your Gear
Add a protection plan from $524.99 | See Options

Configuration

Pedestal Only | Pedestal & PTZ Adapter | Pedestal & Versine 240 Fluid Head

Business Financing Options

Get expert holiday help!
Video Chat | Chat | Request Callback | Email | 866-839-7214

Get The B&H Payboo® Credit Card
See Exclusive Benefits >

Key Features

- For Use with PTZ Cameras/Prompters
- Supports up to 77 lb
- Two Stages for High and Low Shots
- Detachable Skid for Easy Breakdown

Show More

Easily transport your camera to quickly set up shots in a studio or on location with the **Osprey Lite 2-Stage Steering Pedestal with PTZ Adapter** from **Vinten**. This lightweight and compact pedestal supports up to 77 lb and features a detachable skid, which allows the unit to be broken down into two sections for easy transportation and storage. An integral manual pump and an inlet valve make

More Details

Recommended Accessories

View All

Overview | Specs | Reviews | Q&A | Accessories

Samsung 1TB 870 EVO SATA III 2.5" Internal SSD

SAMSUNG Authorized Dealer

BH #SAMZ77E1T0B • MFR #MZ-77E1T0B/AM ★★★★★ 4,777 reviews 26 Questions, 30 Answers Share Print













Compare

In Stock | On Display in Store

$349.99 ~~$414.99~~

Holiday Savings $65.00

Save the Tax‡
or Pay **$59/mo.** suggested payments for 6 Mos.§ when you use the **Payboo** credit card.
Learn More

Pay in 4 interest-free payments of $87.50 with PayPal. Learn more

1 | Add to Cart

Free Expedited Shipping
Want it Thurs 11/5? Order now w/ Free 2-Day Shipping to Norwich, CT
Express Store Pickup in 30 mins >

Protect Your Gear
Add a protection plan from $25.00 See Options >

Capacity

500GB | 1TB | 2TB | 4TB | 8TB

Get expert holiday help!
Chat | Request Callback | Email | 866-839-7214

Get The B&H Payboo® Credit Card
See Exclusive Benefits >

Key Features

- 1TB Storage Capacity
- SATA III 6 Gb/s Interface
- 2.5" Form Factor
- 1GB LPDDR4 Cache

Show More

Store your data in the **1TB 870 EVO SATA III 2.5" Internal SSD** from **Samsung** for quick access. It features sequential read speeds of up to 560 MB/s and sequential write speeds of up to 530 MB/s, making it ideal for storing and rendering large format files such as 4K video and 3D data. Moreover, it has a 2.5" form factor, which is compatible with a wide range of notebooks and desktop

More Details

Recommended Accessories

View All

SANDISK 512GB Extreme PRO UHS-II SDXC Memory Card

SANDISK Authorized Dealer

BH #SAEPSD512GB9 • MFR #SDSDXDK-512G-ANCIN ★★★★★ 16 reviews | 3 Questions, 3 Answers | Share | Print



Compare

Check compatibility with your camera

In Stock | No Store Display

$343.86 +

Save the Tax‡
or Pay **$58/mo.** suggested payments for 6 Mos.§ when you use the **Payboo** credit card.
Learn More

Pay in 4 interest-free payments of $85.97 with **PayPal.** Learn more

1 | Add to Cart

Free Expedited Shipping
Want it Thurs 11/5? Order now w/ Free 2-Day Shipping to Norwich, CT
Express Store Pickup in 30 mins

Protect Your Gear
Add a protection plan from $25.00 — See Options

Upgraded Model Available
SANDISK 512GB Extreme PRO UHS-II SDX... $599.99 — See Details

Quantity
1 | 2 | 3 | 5

Key Features

- 512GB Storage Capacity
- Maximum Read Speed: 300 MB/s
- UHS-II / V90 / U3 / Class 10
- Maximum Write Speed: 260 MB/s

Show More

Achieve maximum performance for a faster workflow and burst shooting with the **512GB Extreme PRO UHS-II SDXC Memory Card** from **SANDISK**, which lets users capture flawless cinema-quality 8K, 4K, and Full HD video, as well as raw photos and continuous shutter bursts. This card features a storage capacity of 512GB and takes advantage of the UHS-II bus to support read speeds of up to

More Details

Get expert holiday help!
Video Chat | Chat | Request Callback | Email | 866-839-7214

SANDISK 128GB Extreme PRO UHS-I SDXC Memory Card

SANDISK Authorized Dealer

BH #SA128EPSD • MFR #SDSDXXJ-128G-GSCIN ★★★★★ 25 reviews 6 Questions, 6 Answers Share Print



Check compatibility with your camera

Top Seller

In Stock | On Display in Store

$51.99 ~~$52.99~~
Holiday Savings $1.00

+

Save the Tax‡
when you use the **Payboo** credit card.
Learn More

Pay in 4 interest-free payments of $13.00 with **PayPal.** Learn more

1 | Add to Cart

Free 2-Day Shipping
Want it Thurs 11/5? Order now w/ Free 2-Day Shipping to Norwich, CT
Express Store Pickup in 30 mins >

Protect Your Gear
Add a protection plan from **$25.00**
See Options >

Key Features

- 128GB Storage Capacity
- Max Read Speed: 250 MB/s
- UHS-I / V30 / U3 / Class 10
- Max Write Speed: 120 MB/s

Show More

Designed for SD devices that can capture Full HD, 3D, and 4K video, as well as raw and burst photography, the **Extreme PRO UHS-I SDXC Memory Card** from **SANDISK** has a capacity of 128GB, is compatible with the UHS-I bus, and features a speed class rating of V30, which guarantees minimum write speeds of 30 MB/s. Read speeds are supported up to 250 MB/s and write speeds

More Details

Capacity

32GB | 64GB | 128GB | 256GB | 512GB | 1TB

Quantity

1 | 2 | 3 | 5

Get expert holiday help!
Video Chat | Chat | Request Callback | Email | 866-839-7214

Blackmagic Design HyperDeck Studio 4K Pro

BH #BLHDS4KPRO • MFR #HYPERD/ST/DG4P ★★★★½ 6 reviews 27 Questions, 54 Answers Share Print

Blackmagicdesign Authorized Dealer



In Stock | On Display in Store

$2,125.00 +

Save the Tax‡
or Pay **$178/mo.** suggested payments for 12 Mos.[5] when you use the **Payboo** credit card.
Learn More

1 Add to Cart

Free 2-Day Shipping
Want it Thurs 11/5? Order now w/ Free 2-Day Shipping to Norwich, CT
Express Store Pickup in 30 mins >

Protect Your Gear
Add a protection plan from $269.99
See Options >

Used for **$1,912.50** >

Model

Studio 4K Pro | Studio HD Mini | Studio HD Plus | Studio HD Pro

Shipping Restrictions: Sales and Export of this item to China, Hong Kong, Russia, and Venezuela ...

Key Features

- 1 RU File-Based Video Recorder
- Records Compressed in ProRes / DNxHD
- H.264/H.265 10-Bit 4:2:2 Video
- 1 x 12G-SDI Input, 2 x 12G-SDI Outputs

HOLIDAY SPECIALS: FIRST LOOK Shop Deals

Free 2-Day Shipping* to Norwich Order in the next 01:01:53, get it Thurs 11/5 | Extended Returns thru Feb 01, 2027 | NYC SuperStore Pickup Within 30 Minutes

Video Chat with a Pro Video Expert - Live Chat Now

Blackmagic Design SmartScope Duo 4K Rack-Mounted Dual 6G-SDI Monitors

BH #BLSSD42 • MFR #HDL-SMTWSCOPEDUO4K2 ★★★½☆ 9 reviews | 15 Questions, 28 Answers | Share | Print

Blackmagicdesign Authorized Dealer



Top Seller

In Stock | On Display in Store

$1,265.00 +

Save the Tax‡
or Pay **$106/mo.** suggested payments for 12 Mos.§ when you use the **Payboo** credit card.
Learn More

Pay in 4 interest-free payments of $316.25 with **PayPal.** Learn more

1 | Add to Cart

Free 2-Day Shipping
Want it Thurs 11/5? Order in the next 01:01:53 w/ Free 2-Day Shipping to Norwich, CT
Express Store Pickup in 30 mins >

Protect Your Gear
Add a protection plan from $79.99 — See Options >

Get expert holiday help!
Video Chat | Chat | Request Callback | Email | 866-839-7214

Get The B&H Payboo® Credit Card
See Exclusive Benefits >

Key Features

- Supports SD/HD/3G/6G-SDI
- 1 x Loop-Through SDI I/O per Monitor
- Auto Format Sensing & Selection
- Select Video, Waveform, Vectorscope

Show More

The **Blackmagic Design SmartScope Duo 4K Rack-Mounted Dual 6G-SDI Monitors** is a monitoring solution for studio and location productions, displaying video with resolutions up to 3840 x 2160 at 30p. It features two 8" monitors each with a loop-through SDI input and output. The inputs are auto-sensing/selecting so you don't have to worry about matching the input format; the

More Details

Overview | Specs | Reviews 9 | Q&A 15 | Accessories

HOLIDAY SPECIALS: FIRST LOOK. Shop Deals

Free 2-Day Shipping* to Norwich Order in the next 01:02:37, get it Thurs 11/5 | Extended Returns thru Feb 01, 2027 | NYC SuperStore Pickup Within 30 Minutes

Video Chat with a Pro Video Expert - Live Chat Now

Blackmagic Design SmartView 4K G3 15.6" DCI 4K Broadcast Monitor with SMPTE 2110

BH #BLSV43G3 • MFR #HDL-SMTV4K12G3 ★★★★☆ 2 reviews 4 Questions, 7 Answers Share Print

Blackmagicdesign Authorized Dealer

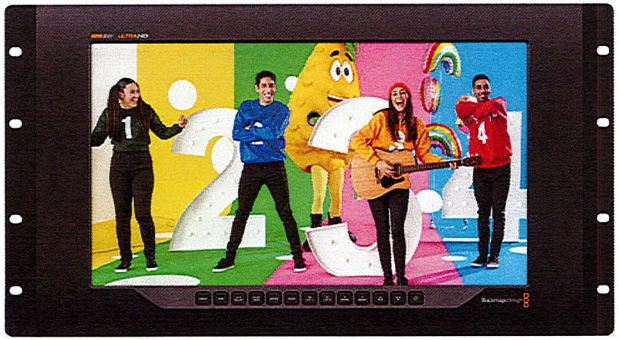

In Stock | On Display in Store

$1,529.00 +

Save the Tax‡ when you use the **Payboo** credit card. Learn More

1 | Add to Cart for Price

Free 2-Day Shipping
Want it Thurs 11/5? Order in the next 01:02:37 w/ Free 2-Day Shipping to Norwich, CT
Express Store Pickup in 30 mins >

Protect Your Gear
Add a protection plan from $79.99 See Options >

Get expert holiday help!
Video Chat | Chat | Request Callback | Email | 866-839-7214

Get The B&H Payboo® Credit Card
See Exclusive Benefits >

Compare

Key Features

- 15.6" 3840 x 2160 Active-Matrix TFT LCD
- SMPTE 2110 IP In via RJ45, Optical Fiber
- 1 x Optical Fiber SDI Socket
- SD/HD Upscaling, Dual 3D LUT Support
- H/V Delay, Blue Only & Frame Markers
- Supports up to DCI 4K60 Video
- 2 x Multi-Rate 12G-SDI Inputs
- 12G-SDI Loop-Through Output, Tally Input
- Peaking, Zoom & Adjustable Markers
- Front Panel & Ethernet Control

Show Less

The **Blackmagic Design SmartView 4K G3** is a professional 15.6" TFT LCD monitor that features built-in optical and copper SMPTE-2110 IP video connections so you can connect directly to IP-based broadcast systems. It has a native resolution of 3840 x 2160 and also offers two multi-rate 12G-SDI inputs for connecting to a range of pro video equipment. The inputs automatically switch between

HOLIDAY SPECIALS: FIRST LOOK. Shop Deals

Free 2-Day Shipping* to Norwich Order in the next 01:01:12, get it Thurs 11/5 | Extended Returns thru Feb 01, 2027 | NYC SuperStore Pickup Within 30 Minutes

Video Chat with a Pro Video Expert - Live | Chat Now

Blackmagic Design Videohub 40x40 12G Zero-Latency Video Router

BH #BLVH404012G • MFR #VHUBSMAS12G04040 | ★★★★★ 1 review | 5 Questions, 9 Answers | Share | Print

Blackmagicdesign Authorized Dealer



Compare

In Stock | No Store Display

$4,445.00 +

Save the Tax‡
or Pay **$371/mo.** suggested payments for 12 Mos.§ when you use the **Payboo** credit card.
Learn More

1 | Add to Cart

Free 2-Day Shipping
Want it Thurs 11/5? Order in the next 01:01:12 w/ Free 2-Day Shipping to Norwich, CT
Express Store Pickup in 30 mins >

Protect Your Gear
Add a protection plan from $194.99 | See Options >

Used for $4,044.95 >

I/O Configuration

10 In | 10 Out | 20 In | 20 Out | 40 In | 40 Out | 80 In | 80 Out | 120 In | 120 Out

Business Financing Options

Get expert holiday help!
Video Chat | Chat | Request Callback | Email | 866-839-7214

Get The B&H Payboo® Credit Card
See Exclusive Benefits >

Key Features

- Zero-Latency Routing Switcher
- Supports Up to DCI 4K60 Video
- 40 x 12G-SDI Inputs,40 x 12G-SDI Outputs
- Combines SD, HD, UHD 4K & DCI 4K Video

Show More

Support a mix of multiple video formats using the **Videohub 40x40 12G Zero-Latency Video Router** from **Blackmagic Design**. This advanced router provides 40 12G-SDI inputs and 40 12G-SDI outputs for routing any combination of SD, HD, UHD 4K, and DCI 4K video. The Videohub 40x40 12G centralizes all your SDI cables in one hub, enabling you to connect any video input to any video

More Details

Overview | Specs | Reviews 1 | Q&A 5 | Accessories

HOLIDAY SPECIALS: FIRST LOOK
Shop Deals

Free 2-Day Shipping* to Norwich Order by 6pm ET, get it Thurs 11/5 | Extended Returns thru Feb 01, 2027 | NYC SuperStore Pickup Within 30 Minutes

Video Chat with a Pro Video Expert - Live
Chat Now

CueTime Pro 24 Smart Stage Timer & Confidence Monitor

BH #CUPRO24 • MFR #PRO 24 | Share | Print

CueTime
Authorized Dealer





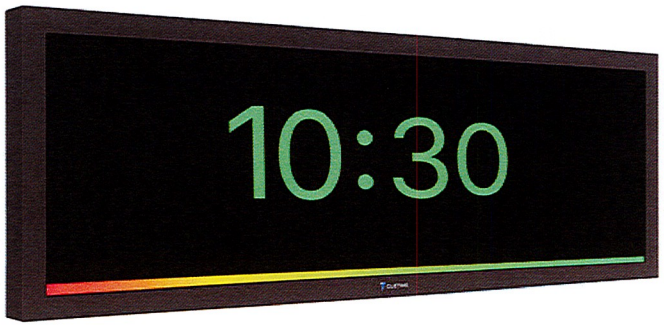

Top Seller

In Stock | No Store Display

$1,650.00 +

Save the Tax‡
or Pay **$138/mo.** suggested payments for 12 Mos.§ when you use the **Payboo** credit card.
Learn More

1 | Add to Cart | Bookmark

Free Expedited Shipping
Want it Thurs 11/5? Order now w/ Free 2-Day Shipping to Norwich, CT
Express Store Pickup in 30 mins >

Protect Your Gear
Add a protection plan from $89.99
See Options >



Get expert holiday help!
Video Chat | Chat | Request Callback | Email | 866-839-7214



Get The B&H Payboo® Credit Card
See Exclusive Benefits >

Key Features

- All-in-One 24" Timer/Confidence Monitor
- 1920 x 540 Screen Resolution
- Touchscreen with 1000 cd/m² Brightness
- Ultrawide 180° Angle of View

Show More

Keep your production team on the same page and your event running smoothly with the **Pro 24 Smart Stage Timer & Confidence Monitor** from **CueTime.** This professional, all-in-one 24" timer and confidence monitor features a bright 1000 cd/m² display with 1920 x 540 resolution. It provides production teams and show callers with precise control over your event timing while ensuring

Overview | Specs | Reviews | Q&A

HOLIDAY SPECIALS: FIRST LOOK Shop Deals

Free 2-Day Shipping* to Norwich Order in the next 00:49:04, get it Thurs 11/5 | Extended Returns thru Feb 01, 2027 | NYC SuperStore Pickup Within 30 Minutes

Video Chat with a Pro Video Expert - Live Chat Now

Panasonic HC-X2100 UHD 4K 3G-SDI/HDMI Pro Camcorder with 24x Zoom

Panasonic

Authorized Dealer

BH #PAHCX2100 • MFR #HC-X2100J ★★★★★ 2 reviews 12 Questions, 14 Answers Share Print



+3

Compare

In Stock | No Store Display

$2,347.99 +

Save the Tax‡
or Pay **$196/mo.** suggested payments for 12 Mos.§ when you use the **Payboo** credit card.
Learn More

1 Add to Cart

Free Expedited Shipping
Want it Thurs 11/5? Order in the next 49:04 w/ Free 2-Day Shipping to Norwich, CT
Express Store Pickup in 30 mins >

Protect Your Gear
Add a protection plan from $119.99 See Options >

Connectivity
HDMI Only | HDMI, Dual-Band Wi-Fi | HDMI, 3G-SDI, Dual-Band Wi-Fi

Trade in your gear for cash Get Started >

Get expert holiday help!
Video Chat | Chat | Request Callback | Email | 866-839-7214

Get The B&H Payboo® Credit Card
See Exclusive Benefits >

Key Features

- Up to UHD 4K60 Video, 3G-SDI & HDMI Out
- 24x Optical Zoom, 48x Digital i.ZOOM
- 5-Axis Hybrid OIS, Detachable Handle
- Records MP4/MOV/AVCHD to Dual SD Cards
- 1/2.5" 8.29MP MOS Sensor
- 120 fps Slow Motion, Live Streaming
- 3.5" LCD, OLED Viewfinder, LED Light
- Wide 25mm Lens, Face Detection Autofocus

Show Less

Record high-quality UHD 4K60 video and still photos virtually anywhere with the **Panasonic HC-X2100 UHD 4K Pro Camcorder**, thanks to its lightweight and compact body. Whether you're filming behind the scenes of a music video or getting content for your latest social media project, the HC-X2100 can work as both a main or secondary camera. The camcorder features a 1/2.5" 8.29MP MOS

More Details

Overview | Specs | Reviews 2 | Q&A 12 | Accessories