GREENWICH_CT_SC31-0

UTILITY POLE #1498

266 STANWICH RD
GREENWICH, CT 06380

PRESIDING POWER COMPANY
EVERSOURCE

TRUE NORTH

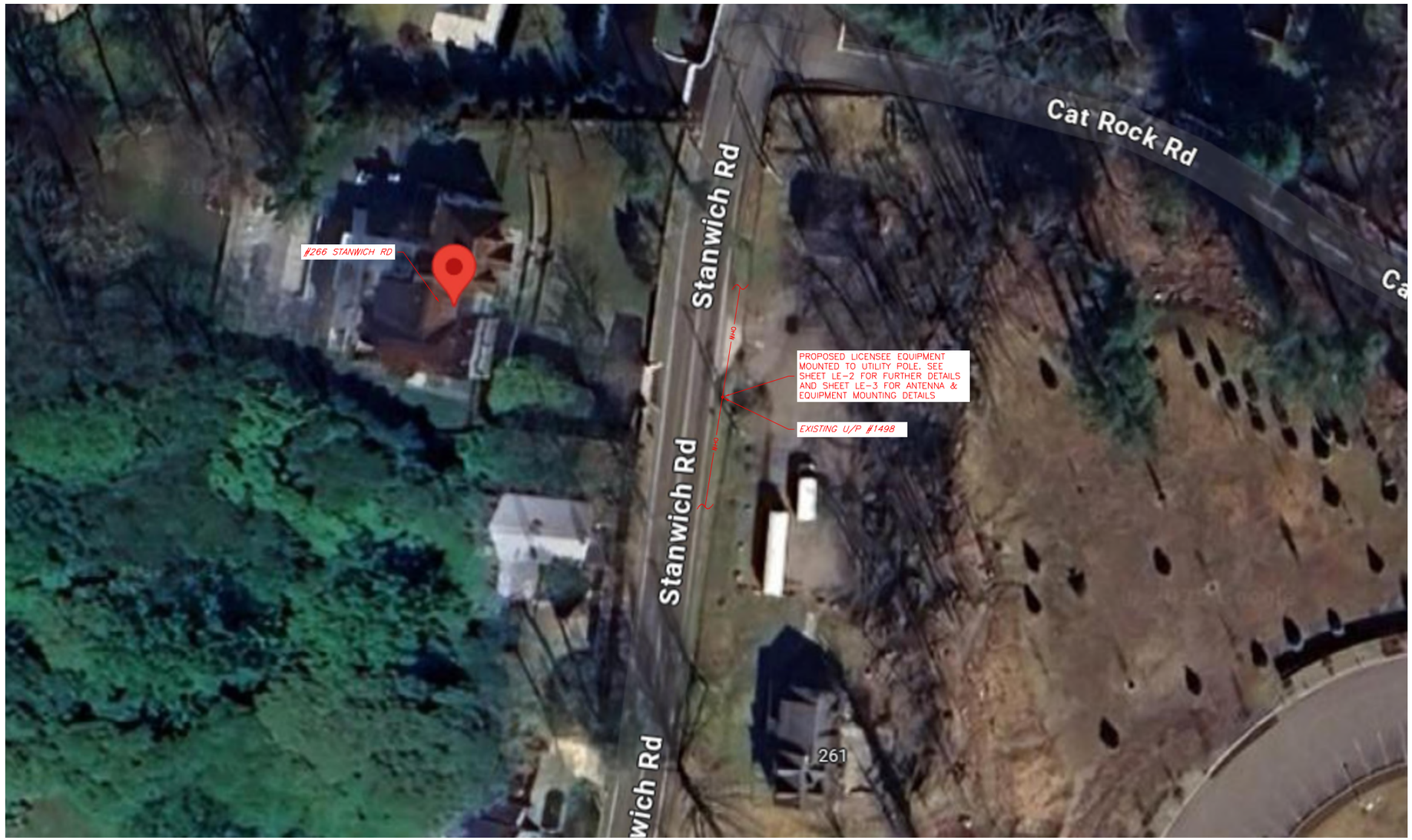

SITE CONTROL POINT:
CENTER OF EXISTING U/P #1498
N 41.073722° (41°-04'-25.399")
W 73.603889° (73°-36'-14.000")

1 / LE-1 LOCATION PLAN/AERIAL IMAGE
SCALE: 1" = 50'

ENGINEER

NB+C ENGINEERING SERVICES, LLC.
300 UNICORN PARK DRIVE, SUITE 0501
WOBURN, MA 01801

APPLICANT

verizon
118 FLANDERS ROAD
WESTBORO, MA 01581
(508) 330-3330

SITE INFORMATION

GREENWICH_CT_SC31-0
UTILITY POLE #1498
266 STANWICH RD
GREENWICH, CT 06830

DESIGN RECORD

REVISIONS

REV	DATE	DESCRIPTION	BY
C	09/25/26	REVISED PER COMMENTS	CMH
B	09/14/26	REVISED PER COMMENTS	AA
A	06/13/25	PRELIMINARY	AMC

GENERAL NOTES

THIS DOCUMENT IS THE DESIGN PROPERTY AND COPYRIGHT OF NB+C ENGINEERING SERVICES, LLC. AND FOR THE EXCLUSIVE USE BY THE TITLE CLIENT. DUPLICATION OR USE WITHOUT THE EXPRESS WRITTEN CONSENT OF THE CREATOR IS STRICTLY PROHIBITED.

THESE DRAWINGS ARE FORMATTED TO BE FULL SIZE AT 11"x17"
ALL OTHER PRINTED SIZES ARE DEEMED "NOT TO SCALE"

SHEET NUMBER

LE-1

GENERAL NOTES:

1. THESE DRAWINGS ARE DIAGRAMMATIC IN NATURE AND ARE INTENDED TO PROVIDE GENERAL INFORMATION REGARDING THE LOCATION, SIZE AND ORIENTATION OF THE PROPOSED WIRELESS TELECOMMUNICATIONS EQUIPMENT INSTALLATION ON THE UTILITY POLE AND ARE NOT SPECIFICALLY INTENDED FOR CONSTRUCTION.
2. VERIZON WIRELESS SHALL PLACE WEATHER RESISTANT PHENOLIC PLACARDS ON UTILITY POLE AND ANCILLARY EQUIPMENT TO IDENTIFY EQUIPMENT OWNERSHIP & CONTACT INFORMATION TO BE UTILIZED IN CASE OF EMERGENCY.
3. AN ANALYSIS OF THE CAPACITY OF THE EXISTING UTILITY POLE TO SUPPORT THE PROPOSED LOADING HAS NOT BEEN COMPLETED BY NB+C ENGINEERING SERVICES, LLC AND THUS, THESE DRAWINGS ARE SUBJECT TO CHANGE PENDING THE OUTCOME OF A STRUCTURAL ANALYSIS (TO BE PERFORMED BY OTHERS).
4. VERIZON WIRELESS' GENERAL CONTRACTOR SHALL EXTEND EFFORTS TO ENSURE THAT ALL PROPOSED EQUIPMENT MEETS THE REQUIREMENTS OF THE EXISTING UTILITY COMPANY OR COMPANIES CURRENTLY OCCUPYING THE UTILITY POLE AND THE 2017 NATIONAL ELECTRICAL SAFETY CODE.

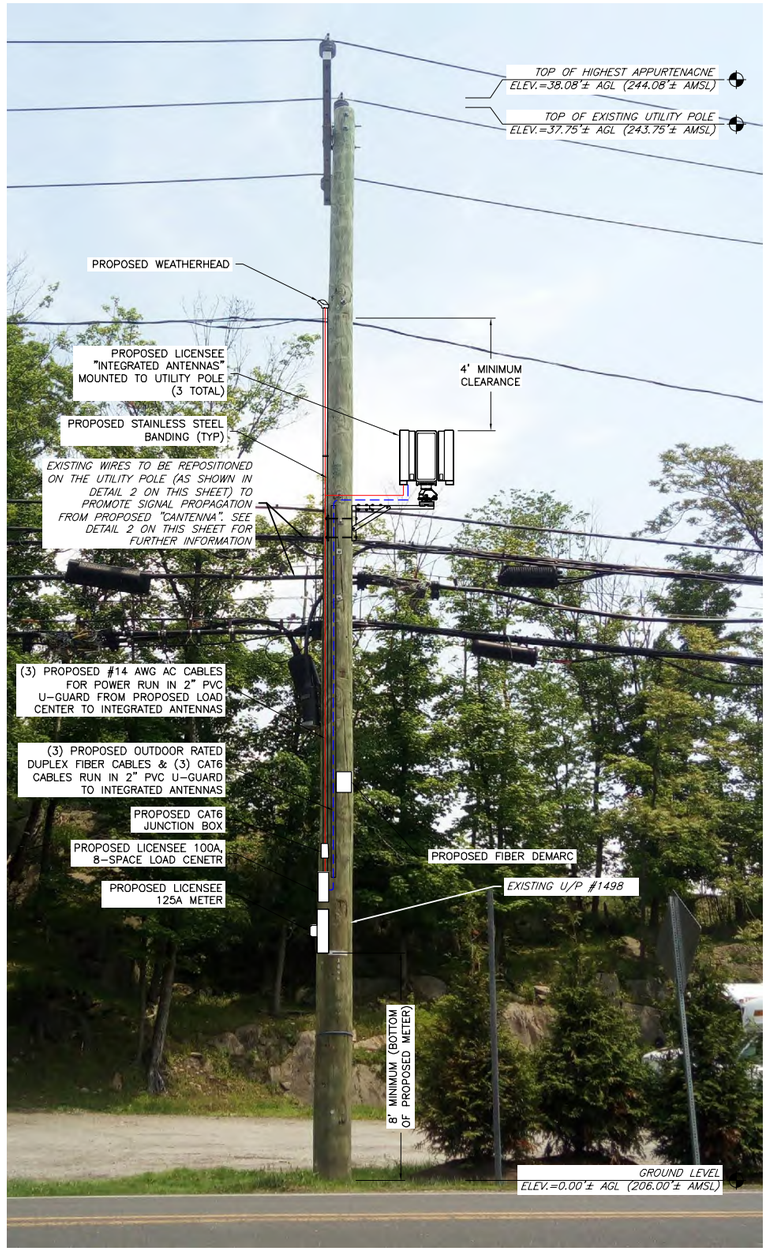

1 LE-2 **UTILITY POLE PHOTO (EXISTING CONDITIONS/SCHEMATIC RENDERING)**
SCALE: NTS

ANTENNA AND MOUNT NOTE:

CONTRACTOR SHALL POSITION/ROTATE PROPOSED ANTENNA MOUNT/BRACKET IN SUCH A WAY SO AS TO NOT INTERFERE WITH EXISTING STREET LIGHT, PRIMARY POWER CROSSARM(S) (IF PRESENT), BRACKETS, BRACES, SECONDARY POWER SUPPORTS OR ANY OTHER MISCELLANEOUS APPURTENANCES AND RELATED SUPPORT BRACKETS ENCOUNTERED LOCATED ON THE EXISTING UTILITY POLE.

EQUIPMENT AND MOUNT NOTE:

CONTRACTOR SHALL POSITION/ROTATE PROPOSED EQUIPMENT AND ASSOCIATED MOUNTS/BRACKETS IN SUCH A WAY SO AS TO NOT INTERFERE WITH EXISTING WIRES/PANELS ETC. OR ANY OTHER MISCELLANEOUS APPURTENANCES AND RELATED SUPPORT BRACKETS ENCOUNTERED LOCATED ON THE FACE OF THE EXISTING UTILITY POLE.

NOTE:

UTILITY POLE, EXISTING APPURTENANCES AND DETAILS OF PROPOSED INSTALLATION SHOWN SCHEMATICALLY.

LEGEND

- = FIBER BUNDLE/JUMPER
- = AC POWER
- = DC POWER
- = GROUND
- = 1/2"ø SUPERFLEX SIGNAL CABLE

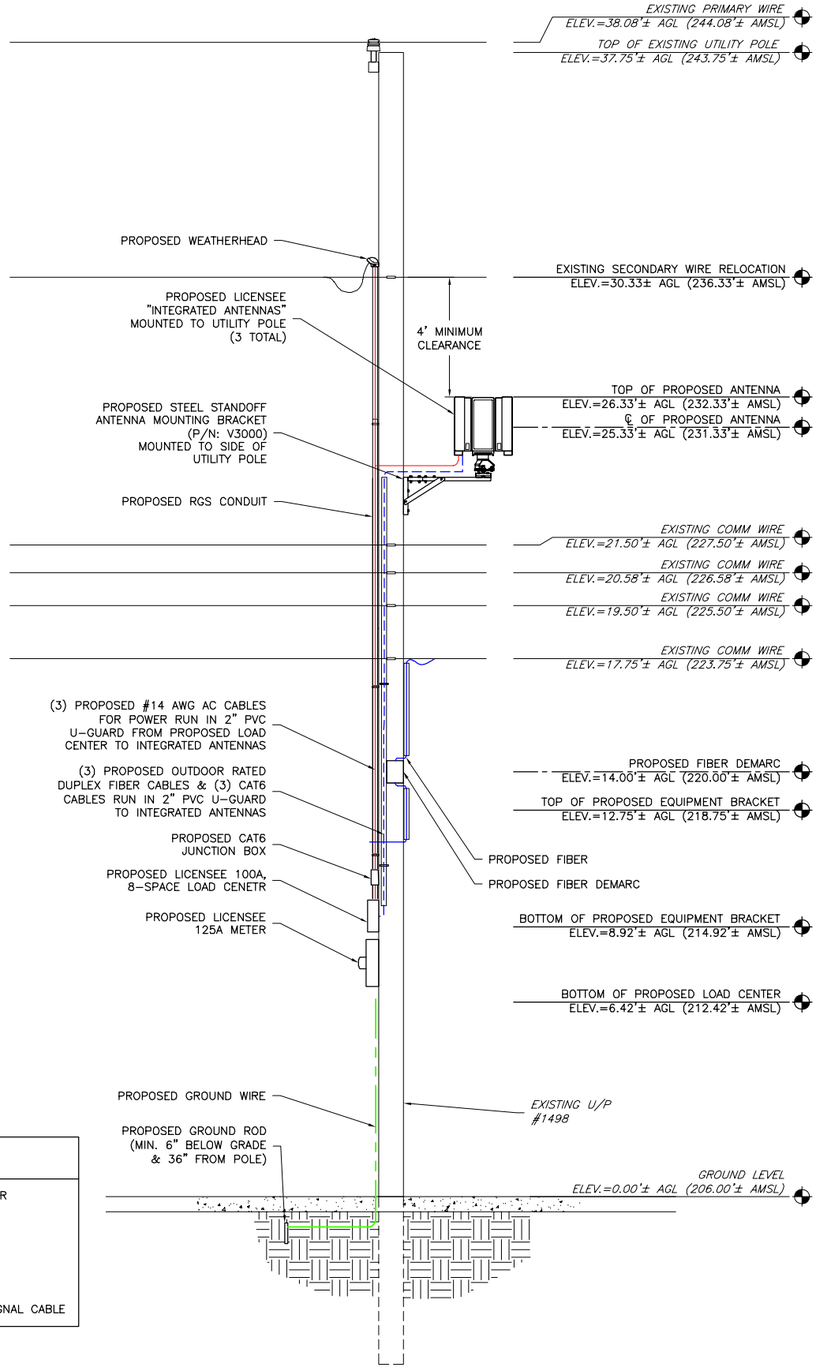

2 LE-2 **UTILITY POLE ELEVATION (PROPOSED CONDITIONS)**
SCALE: 1" = 5'

ENGINEER

NB+C ENGINEERING SERVICES, LLC.
300 UNICORN PARK DRIVE, SUITE 0501
WOBURN, MA 01801

APPLICANT

verizon
118 FLANDERS ROAD
WESTBORO, MA 01581
(508) 330-3330

SITE INFORMATION

GREENWICH_CT_SC31-0
UTILITY POLE #1498
266 STANWICH RD
GREENWICH, CT 06830

DESIGN RECORD

REVISIONS

REV	DATE	DESCRIPTION	BY
C	09/25/26	REVISED PER COMMENTS	CMH
B	09/14/26	REVISED PER COMMENTS	AA
A	06/13/25	PRELIMINARY	AMC

GENERAL NOTES

THIS DOCUMENT IS THE DESIGN PROPERTY AND COPYRIGHT OF NB+C ENGINEERING SERVICES, LLC. AND FOR THE EXCLUSIVE USE BY THE TITLE CLIENT. DUPLICATION OR USE WITHOUT THE EXPRESS WRITTEN CONSENT OF THE CREATOR IS STRICTLY PROHIBITED.

THESE DRAWINGS ARE FORMATTED TO BE FULL SIZE AT 11"x17"
ALL OTHER PRINTED SIZES ARE DEEMED "NOT TO SCALE"

SHEET NUMBER

LE-2

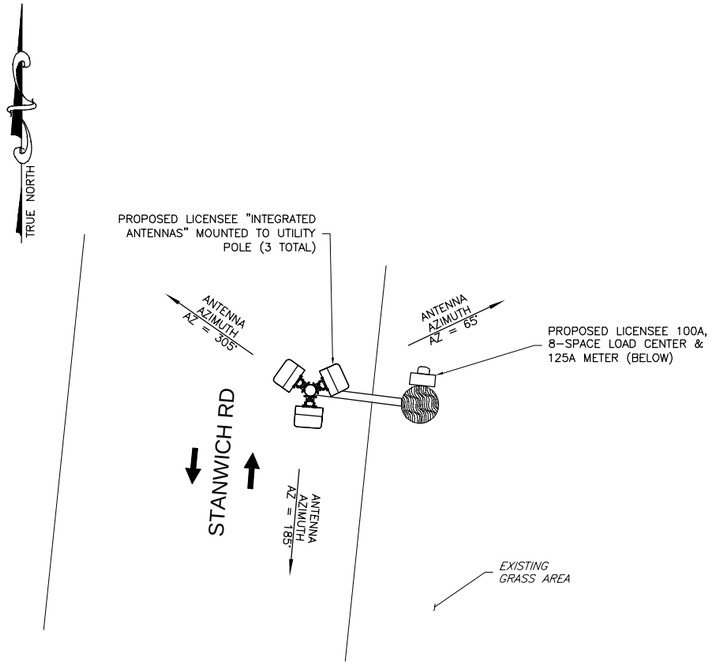

1 / LE-3 ANTENNA ORIENTATION PLAN
SCALE: NTS

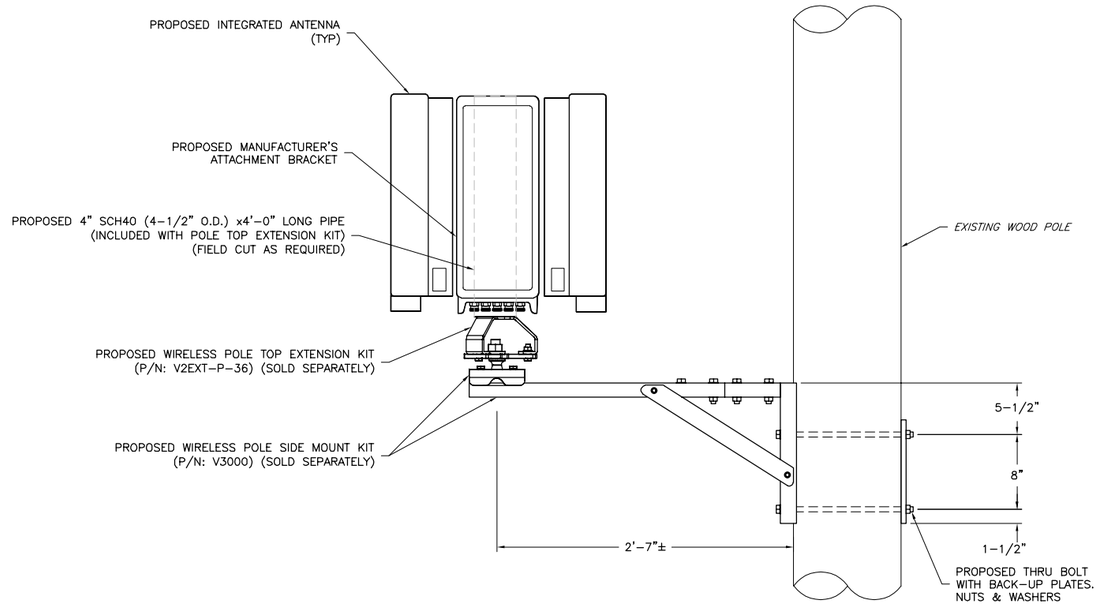

2 / LE-3 PROPOSED ANTENNA MOUNTING DETAIL II
NTS

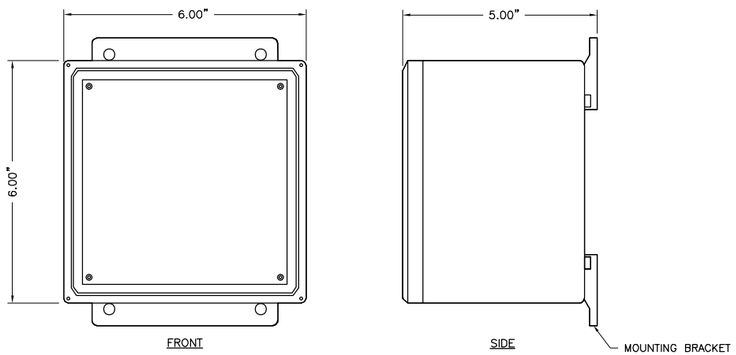

MECHANICAL SPECIFICATIONS
CARLON P/N: NS664 (OR APPROVED EQUAL)
HEIGHT: 6.40 IN
WIDTH: 6.40 IN
DEPTH: 5.13 IN

3 / LE-3 JUNCTION BOX DETAIL
NTS

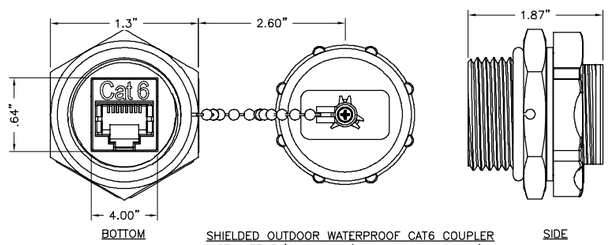

SHIELDED OUTDOOR WATERPROOF CAT6 COUPLER
INSTALLER P/N: 15811 (OR APPROVED EQUAL)

4 / LE-3 RJ45 CONNECTION DETAIL
NTS

ENGINEER

NB+C™ TOTALLY COMMITTED.
NB+C ENGINEERING SERVICES, LLC.
300 UNICORN PARK DRIVE, SUITE 0501
WOBURN, MA 01801

APPLICANT

verizon
118 FLANDERS ROAD
WESTBORO, MA 01581
(508) 330-3330

SITE INFORMATION

GREENWICH_CT_SC31-0
UTILITY POLE #1498
266 STANWICH RD
GREENWICH, CT 06830

DESIGN RECORD

REVISIONS

REV	DATE	DESCRIPTION	BY
C	09/25/26	REVISED PER COMMENTS	CMH
B	09/14/26	REVISED PER COMMENTS	AA
A	06/13/25	PRELIMINARY	AMC

GENERAL NOTES

THIS DOCUMENT IS THE DESIGN PROPERTY AND COPYRIGHT OF NB+C ENGINEERING SERVICES, LLC. AND FOR THE EXCLUSIVE USE BY THE TITLE CLIENT. DUPLICATION OR USE WITHOUT THE EXPRESS WRITTEN CONSENT OF THE CREATOR IS STRICTLY PROHIBITED.

THESE DRAWINGS ARE FORMATTED TO BE FULL SIZE AT 11"x17"
ALL OTHER PRINTED SIZES ARE DEEMED "NOT TO SCALE"

SHEET NUMBER

LE-3

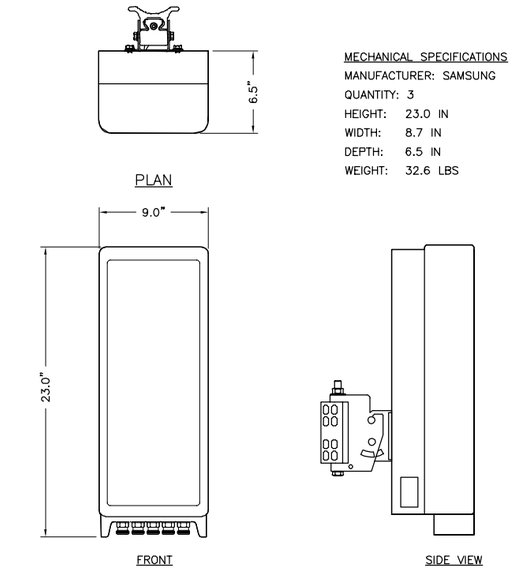

MECHANICAL SPECIFICATIONS
MANUFACTURER: SAMSUNG
QUANTITY: 3
HEIGHT: 23.0 IN
WIDTH: 8.7 IN
DEPTH: 6.5 IN
WEIGHT: 32.6 LBS

1 / LE-4 SAMSUNG MT1602D-48B ANTENNA DETAIL
NTS

MAIN LOAD CENTER

CKT #	1	2	3	4	5	6	7	8
DESCRIPTION	DUAL POLE MAIN BREAKER		DUAL POLE SURGE ARRESTOR		SINGLE POLE PDU	SINGLE POLE PDU	SINGLE POLE PDU	SPARE
AMP	100A		20A		10A	10A	10A	–

2 / LE-4 ELECTRICAL LOAD CENTER PANEL SCHEDULE
SCALE: NTS

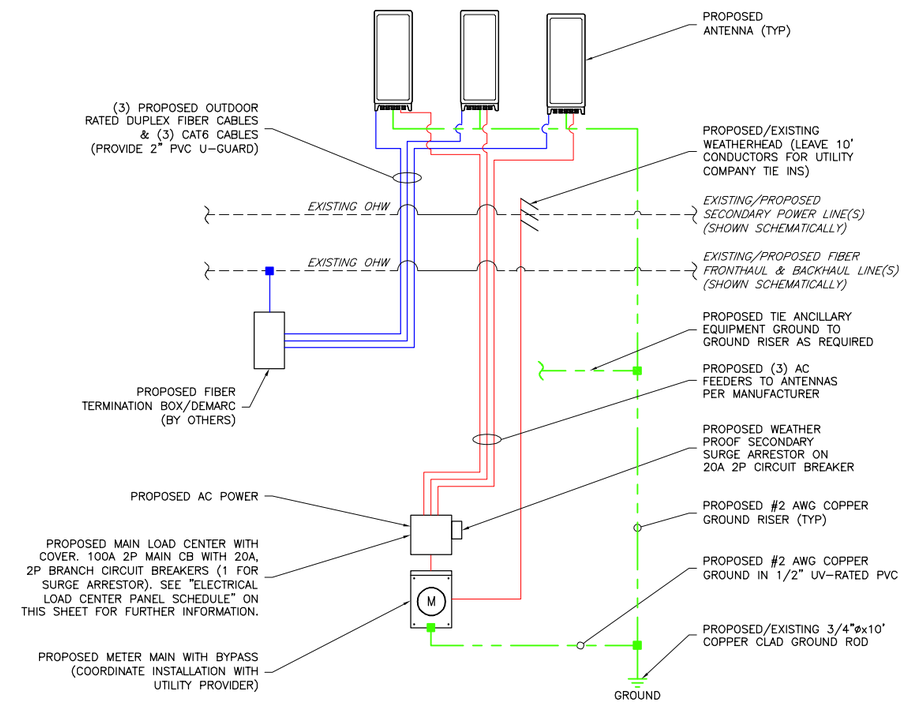

ONE-LINE DIAGRAM NOTES:
1.) PROVIDE WEATHER TIGHT SEAL CONNECTORS ON ALL CONNECTIONS EACH SIDE OF ENCLOSURE HOUSING

2.) COORDINATE ANY FURTHER MISCELLANEOUS WIRING AND CONDUIT REQUIREMENTS WITH VERIZON WIRELESS AND ELECTRIC COMPANY

LEGEND
= FIBER BUNDLE/JUMPER
= AC POWER
= GROUND

2 / LE-4 FIBER/ELECTRICAL ONE-LINE DIAGRAM
SCALE: NTS

ENGINEER

NB+C TOTALLY COMMITTED.
NB+C ENGINEERING SERVICES, LLC.
300 UNICORN PARK DRIVE, SUITE 0501
WOBURN, MA 01801

APPLICANT

verizon
118 FLANDERS ROAD
WESTBORO, MA 01581
(508) 330-3330

SITE INFORMATION

GREENWICH_CT_SC31-0
UTILITY POLE #1498
266 STANWICH RD
GREENWICH, CT 06830

DESIGN RECORD

REVISIONS

REV	DATE	DESCRIPTION	BY
C	09/25/26	REVISED PER COMMENTS	CMH
B	09/14/26	REVISED PER COMMENTS	AA
A	06/13/25	PRELIMINARY	AMC

GENERAL NOTES

THIS DOCUMENT IS THE DESIGN PROPERTY AND COPYRIGHT OF NB+C ENGINEERING SERVICES, LLC. AND FOR THE EXCLUSIVE USE BY THE TITLE CLIENT. DUPLICATION OR USE WITHOUT THE EXPRESS WRITTEN CONSENT OF THE CREATOR IS STRICTLY PROHIBITED.

THESE DRAWINGS ARE FORMATTED TO BE FULL SIZE AT 11"x17"
ALL OTHER PRINTED SIZES ARE DEEMED "NOT TO SCALE"

SHEET NUMBER

LE-4

Details of Proposed Small Cell Wireless Facility

In compliance with the Regulations of Connecticut State Agencies § 16-247c-5, the Lease Exhibit, also provided in this Attachment 1, includes details of the proposed small cell wireless facility ("Facility"), the geographic location of the utility pole that will be used, and a schematic of Cellco's proposed pole attachment plan. Antenna(s) will be top or side mounted on the utility pole, as indicated on the Lease Exhibit. Radio and electrical service equipment associated with the Facility will be located on the lower portion of the pole. Power and telephone service to the Facility will be provided as noted in the Lease Exhibit. The design of Cellco's Facility will comply with all applicable National Electrical Safety Code ("NESC") and National Electric Code ("NEC") design and construction standards and will meet the requirements of the electric distribution company and pole owners.

Cellco will apply for and receive applicable permits, including a local electrical permit for the installation of the small cell equipment. As a part of this local permitting process, Cellco will consult with the municipality regarding municipal traffic control requirements. Applicable traffic control measures required by the municipality would be incorporated into the installation and maintenance process for the proposed Facility, should it be approved by the Authority. These measures may include a combination of advanced signage, channelizing devices (cones and barricades), proper lighting, and, when necessary, flaggers or law enforcement.

Installation contractors engaged by Cellco for small cell projects, including this Facility, must hold a current Connecticut electrician license. Cellco has specifically designated, qualified construction managers who are authorized to inspect each completed installation to confirm compliance with the pole owner standards, the latest adopted NESC, NEC and/or other applicable codes. Cellco then notifies the utility pole owner that the required inspection has been

completed and that the installation was constructed in accordance with those standards. The utility pole owner engineer then conducts an inspection of the installation for the purpose of confirming code compliance.

Installation and maintenance activities are performed by personnel trained in personal protective equipment use, and traffic safety and control procedures, and are required to follow such safety measures when conducting inspection, maintenance or installation activities at Cellco small cell equipment facilities. Installation of small cell wireless facilities similar to the proposed Facility typically takes one to two days and necessitates the use of a bucket truck. During installation, Cellco's contractors follow municipal traffic control requirements, as may be applicable. After installation, maintenance of the small cell facilities is infrequent. If maintenance is required, similar traffic control measures would be employed to protect Cellco's contractors, travelers on the adjacent right-of-way, and local residents accessing their properties.

The purpose of the proposed installation is to provide the general public, Cellco customers and emergency service providers with access to enhanced and more reliable wireless, voice and data services near the Facility. Cellco has identified this area for development of its advanced wireless network. Consistent with the provisions of Conn. Gen. Stat. § 16-247h, the proposed Facility is in the public interest because it will help facilitate the efficient development and deployment of advanced wireless technology and infrastructure and promotes the shared use of existing utility poles in or near public rights of way.[1]

[1] *See* Conn. Gen. Stat. § 16-247h ("The authority shall authorize any certified telecommunications provider to install, maintain, operate, manage or control poles, wires, conduits or other fixtures under or over any public highway or street for the provision of telecommunications service authorized by section 16-247c, if such installation, maintenance, operation, management or control is in the public interest, which includes but is not limited to, facilitating the efficient development and deployment of an advanced telecommunications infrastructure, facilitating maximum network interoperability and interconnectivity, and encouraging shared use of existing facilities and cooperative development of new facilities where legally possible and technically and economically feasible.").