Robinson+Cole

EMILY C. DEANS

1055 Washington Boulevard
Stamford, CT 06901-2249
Main (203) 462-7500
Fax (203) 462-7599
edeans@rc.com
Direct 203-462-7523

Via Certificate of Mailing

June 30 2026

Marcelo Stefani and Jorgelina Brunetti de Stefani
266 Stanwich Road
Greenwich, CT 06830

Re: Utility Pole Attachments to be Performed by Cellco Partnership
Pole Location: Utility Pole #1498, Public Right-of-Way, Stanwich Road across from 266 Stanwich Road, Greenwich, CT
Your Property Location: 266 Stanwich Road, Greenwich, CT
Cellco Identification for Proposed Installation: Greenwich CT SC31
Property Owner Notification

Dear Mr. Stefani and Ms. Brunetti de Stefani:

Cellco Partnership d/b/a Verizon Wireless ("Cellco") is in the process of upgrading its wireless network at the pole location identified above ("Pole Location") near your property. Cellco has determined that it is necessary to install a small cell wireless antenna or antennas and associated radio and electrical equipment on the existing utility pole or on a replacement pole as indicated on the enclosed plans, within the public right-of-way at the same location. This service upgrade project will allow Cellco to provide customers in the area around your property with enhanced and more reliable wireless services.

State law permits Cellco to attach and operate new antennas and associated equipment on existing utility poles, or replacement poles, in the public rights-of-way and the Connecticut Public Utilities Regulatory Authority ("PURA") has jurisdiction over the proposed attachments.[1]

[1] *See* Docket No 16-06-38, *Request for Declaratory Ruling by the Town of Greenwich et al. Regarding Regulatory Authority Over Small Cell Wireless Facilities*, Decision (Dec. 14, 2016).

Robinson+Cole

Project Notice and Application Process:

Pursuant to Connecticut General Statutes ("CGS") section 16-234, Cellco may not place its antennas or equipment on a utility pole in the public right-of-way without *either* (1) the consent of owners of adjoining property, *or* (2) if consent cannot be obtained, the approval of PURA.[1] An excerpt of CGS section 16-234, which details your rights, is enclosed as Attachment A. PURA has defined the term "owners of adjoining property" to mean the owners whose property is physically contiguous to the affected section of the public right-of-way where the utility pole is located, and the owners of the property across the street from the contiguous parcel. PURA refers to these owners as "Immediate Adjoining Property Owners".[2] You are receiving this notification because local municipal records identify your property as being considered contiguous to the identified pole where the Cellco equipment is proposed to be installed.

Please note that if you do not contact me to note your objection to the proposed project within thirty (30) days from the date of this letter, we will presume that you consent to the placement of antennas and associated equipment on the identified pole and will so advise PURA. During the thirty (30) days from the date of this letter, you may contact me or PURA to indicate that you withhold consent.

Beginning thirty (30) days after the date of this letter, Cellco may file an Application for Approval of a Construction Plan ("Application") for the above-referenced facility with PURA. In its Application, Cellco will advise PURA of the correspondence, e-mails, and telephone contacts I have received from Immediate Adjoining Property Owners in response to this letter.

---

[1] In its Decision in Docket No. 07-03-34RE01, PURA clarified that "any 'telegraph, telephone or electric light company or association [and] any company or association engaged in distributing electricity by wires or similar conductors or in using an electric wire or conductor for any purpose' may 'change the location of, or … erect or place, wires, conductors, fixtures, structures or apparatus of any kind over, on or under any highway or public ground' only after it has provided prior notice and obtained consent of adjoining proprietors before installation under General Statutes of Connecticut § 16-234." *See* Docket No. 07-03-34RE01, *Application of the Cities of Bridgeport, Danbury and Stamford for a Declaratory Ruling Regarding the Safety of VRAD Boxes – Judgment on Stipulation*, Decision at 20 (Aug. 12, 2009).

[2] *See* Docket No. 17-02-49, *PURA Formalization of Small Cell Antenna Applicant Processes and Procedures to Construct Facilities in Connecticut's Public Rights-of-Way*, Decision at 4, 12 (June 2, 2017) ("Small Cell Processes Decision").

Robinson+Cole

PURA's Consideration of Objections:

Upon receipt of Cellco's Application, PURA will directly contact those Immediate Adjoining Property Owners that have withheld consent regarding the process to be followed by PURA to review Cellco's Application. If you withheld consent (i.e. noted an objection), PURA will provide you with an opportunity to file a written confirmation of your objection and request for a hearing. You may then appear before PURA on a specified date to present your concerns and to respond to questions from PURA staff and representatives from other interested parties regarding your concerns.

The PURA has instructed Cellco and other wireless providers to inform municipalities and Immediate Adjoining Property Owners that PURA has no jurisdiction or statutory authority to address the health effects associated with radio frequency ("RF") emissions for any installations that comply with the Federal Communications Commission ("FCC") standards.[3] The FCC is charged by Congress with sole authority for the RF emissions standards that Cellco and other commercial mobile radio service ("CMRS") facilities must meet to ensure protection of public health and safety.[4] State and local agencies are barred from applying other standards, and Cellco provides PURA with evidence of compliance with the FCC standard for each project.

Similarly, PURA has determined that it has no authority to consider objections to a small cell project that are based on claims of adverse impacts to property values or aesthetics impacts. Therefore, PURA will not perform an evaluation of these claims, and will not deny an application on these grounds.[5]

Project Details:

A lease exhibit detailing Cellco's plans to attach antennas along with radio and electrical service equipment to the identified pole at the Pole Location in the public right-of-way is enclosed as Attachment B (the "Lease Exhibit"). The Lease Exhibit includes detailed information about the proposed installation, including the dimensions of the antenna(s) and radio and electrical equipment, the general location of the identified pole that will be used, and a diagram and elevation drawing of Cellco's pole attachment plan. The photographs enclosed as Attachment C show examples of a similar small cell wireless antenna installations, one using a "top-mount" installation, and another using a "side-mount" installation. The Lease Exhibit included as Attachment B indicates whether the proposed installation will be top-mounted or

[3] Small Cell Processes Decision at 9, 13.

[4] 47 USCS §332; Small Cell Processes Decision at 9.

[5] Small Cell Processes Decision at 9.

Robinson+Cole

side-mounted on the pole. An Immediate Adjoining Property Owner Map showing the location of the identified pole and its proximity to your property is enclosed as Attachment D.

If you have any questions or concerns with the location of this equipment, or wish to file an objection, please feel free to contact me. You may also contact the PURA Consumer Affairs Unit directly at:

Public Utilities Regulatory Authority
Ten Franklin Square
New Britain, Connecticut 06051
Attn: Consumer Affairs Unit
1-800-382-4586 (toll free within Connecticut)
1-860-827-2622 (outside Connecticut)

PURA Guide Information:

A copy of PURA's "Guide to Public Hearings for Antenna Attachments to Utility Poles" ("PURA Guide", 19 pages) is enclosed as Attachment E. The PURA Guide provides additional information regarding the small cell antenna notice and application procedures, and your opportunities to participate in the process.

Thank you for your consideration of this matter.

Sincerely,

Emily C. Deans

Emily C. Deans

Enclosures: Attachments A, B, C, D, and E

Robinson+Cole

EMILY C. DEANS

1055 Washington Boulevard
Stamford, CT 06901-2249
Main (203) 462-7500
Fax (203) 462-7599
edeans@rc.com
Direct 203-462-7523

Via Certificate of Mailing

June 30, 2026

Greenwich Country Day School Inc.
257 Stanwich Road
Greenwich, CT 06830

Re: Utility Pole Attachments to be Performed by Cellco Partnership
Pole Location: Utility Pole #1498, Public Right-of-Way, Stanwich Road across from 266 Stanwich Road, Greenwich, CT
Your Property Location: 257 Stanwich Road, Greenwich, CT
Cellco Identification for Proposed Installation: Greenwich CT SC31
Property Owner Notification

Dear Sir or Madam:

Cellco Partnership d/b/a Verizon Wireless ("Cellco") is in the process of upgrading its wireless network at the pole location identified above ("Pole Location") near your property. Cellco has determined that it is necessary to install a small cell wireless antenna or antennas and associated radio and electrical equipment on the existing utility pole or on a replacement pole as indicated on the enclosed plans, within the public right-of-way at the same location. This service upgrade project will allow Cellco to provide customers in the area around your property with enhanced and more reliable wireless services.

State law permits Cellco to attach and operate new antennas and associated equipment on existing utility poles, or replacement poles, in the public rights-of-way and the Connecticut Public Utilities Regulatory Authority ("PURA") has jurisdiction over the proposed attachments.[1]

[1] *See* Docket No 16-06-38, *Request for Declaratory Ruling by the Town of Greenwich et al. Regarding Regulatory Authority Over Small Cell Wireless Facilities*, Decision (Dec. 14, 2016).

Robinson+Cole

Project Notice and Application Process:

Pursuant to Connecticut General Statutes ("CGS") section 16-234, Cellco may not place its antennas or equipment on a utility pole in the public right-of-way without *either* (1) the consent of owners of adjoining property, *or* (2) if consent cannot be obtained, the approval of PURA.[1] An excerpt of CGS section 16-234, which details your rights, is enclosed as Attachment A. PURA has defined the term "owners of adjoining property" to mean the owners whose property is physically contiguous to the affected section of the public right-of-way where the utility pole is located, and the owners of the property across the street from the contiguous parcel. PURA refers to these owners as "Immediate Adjoining Property Owners".[2] You are receiving this notification because local municipal records identify your property as being considered contiguous to the identified pole where the Cellco equipment is proposed to be installed.

Please note that if you do not contact me to note your objection to the proposed project within thirty (30) days from the date of this letter, we will presume that you consent to the placement of antennas and associated equipment on the identified pole and will so advise PURA. During the thirty (30) days from the date of this letter, you may contact me or PURA to indicate that you withhold consent.

Beginning thirty (30) days after the date of this letter, Cellco may file an Application for Approval of a Construction Plan ("Application") for the above-referenced facility with PURA. In its Application, Cellco will advise PURA of the correspondence, e-mails, and telephone contacts I have received from Immediate Adjoining Property Owners in response to this letter.

---

[1] In its Decision in Docket No. 07-03-34RE01, PURA clarified that "any 'telegraph, telephone or electric light company or association [and] any company or association engaged in distributing electricity by wires or similar conductors or in using an electric wire or conductor for any purpose' may 'change the location of, or … erect or place, wires, conductors, fixtures, structures or apparatus of any kind over, on or under any highway or public ground' only after it has provided prior notice and obtained consent of adjoining proprietors before installation under General Statutes of Connecticut § 16-234." *See* Docket No. 07-03-34RE01, *Application of the Cities of Bridgeport, Danbury and Stamford for a Declaratory Ruling Regarding the Safety of VRAD Boxes – Judgment on Stipulation*, Decision at 20 (Aug. 12, 2009).

[2] *See* Docket No. 17-02-49, *PURA Formalization of Small Cell Antenna Applicant Processes and Procedures to Construct Facilities in Connecticut's Public Rights-of-Way*, Decision at 4, 12 (June 2, 2017) ("Small Cell Processes Decision").

Robinson+Cole

PURA's Consideration of Objections:

Upon receipt of Cellco's Application, PURA will directly contact those Immediate Adjoining Property Owners that have withheld consent regarding the process to be followed by PURA to review Cellco's Application. If you withheld consent (i.e. noted an objection), PURA will provide you with an opportunity to file a written confirmation of your objection and request for a hearing. You may then appear before PURA on a specified date to present your concerns and to respond to questions from PURA staff and representatives from other interested parties regarding your concerns.

The PURA has instructed Cellco and other wireless providers to inform municipalities and Immediate Adjoining Property Owners that PURA has no jurisdiction or statutory authority to address the health effects associated with radio frequency ("RF") emissions for any installations that comply with the Federal Communications Commission ("FCC") standards.[3] The FCC is charged by Congress with sole authority for the RF emissions standards that Cellco and other commercial mobile radio service ("CMRS") facilities must meet to ensure protection of public health and safety.[4] State and local agencies are barred from applying other standards, and Cellco provides PURA with evidence of compliance with the FCC standard for each project.

Similarly, PURA has determined that it has no authority to consider objections to a small cell project that are based on claims of adverse impacts to property values or aesthetics impacts. Therefore, PURA will not perform an evaluation of these claims, and will not deny an application on these grounds.[5]

Project Details:

A lease exhibit detailing Cellco's plans to attach antennas along with radio and electrical service equipment to the identified pole at the Pole Location in the public right-of-way is enclosed as Attachment B (the "Lease Exhibit"). The Lease Exhibit includes detailed information about the proposed installation, including the dimensions of the antenna(s) and radio and electrical equipment, the general location of the identified pole that will be used, and a diagram and elevation drawing of Cellco's pole attachment plan. The photographs enclosed as Attachment C show examples of a similar small cell wireless antenna installations, one using a "top-mount" installation, and another using a "side-mount" installation. The Lease Exhibit included as Attachment B indicates whether the proposed installation will be top-mounted or

[3] Small Cell Processes Decision at 9, 13.

[4] 47 USCS §332; Small Cell Processes Decision at 9.

[5] Small Cell Processes Decision at 9.

Robinson+Cole

side-mounted on the pole. An Immediate Adjoining Property Owner Map showing the location of the identified pole and its proximity to your property is enclosed as Attachment D.

If you have any questions or concerns with the location of this equipment, or wish to file an objection, please feel free to contact me. You may also contact the PURA Consumer Affairs Unit directly at:

Public Utilities Regulatory Authority
Ten Franklin Square
New Britain, Connecticut 06051
Attn: Consumer Affairs Unit
1-800-382-4586 (toll free within Connecticut)
1-860-827-2622 (outside Connecticut)

PURA Guide Information:

A copy of PURA's "Guide to Public Hearings for Antenna Attachments to Utility Poles" ("PURA Guide", 19 pages) is enclosed as Attachment E. The PURA Guide provides additional information regarding the small cell antenna notice and application procedures, and your opportunities to participate in the process.

Thank you for your consideration of this matter.

Sincerely,

Emily C. Deans

Emily C. Deans

Enclosures: Attachments A, B, C, D, and E

Attachment A

Excerpt of Connecticut General Statutes Section 16-234

Connecticut General Statutes Section 16-234 provides, in relevant part:

> No utility shall exercise any powers which may have been conferred upon it to change the location of, or to erect or place, wires, conductors, fixtures, structures or apparatus of any kind over, on or under any public road, public highway or public ground, without the consent of the adjoining proprietors or, if such company is unable to obtain such consent, without the approval of the Public Utilities Regulatory Authority, which shall be given only after a hearing upon notice to such proprietors. (emphasis added)

Attachment 5, Page 1 of 4

GREENWICH_CT_SC31-0

UTILITY POLE #1498

266 STANWICH RD
GREENWICH, CT 06380

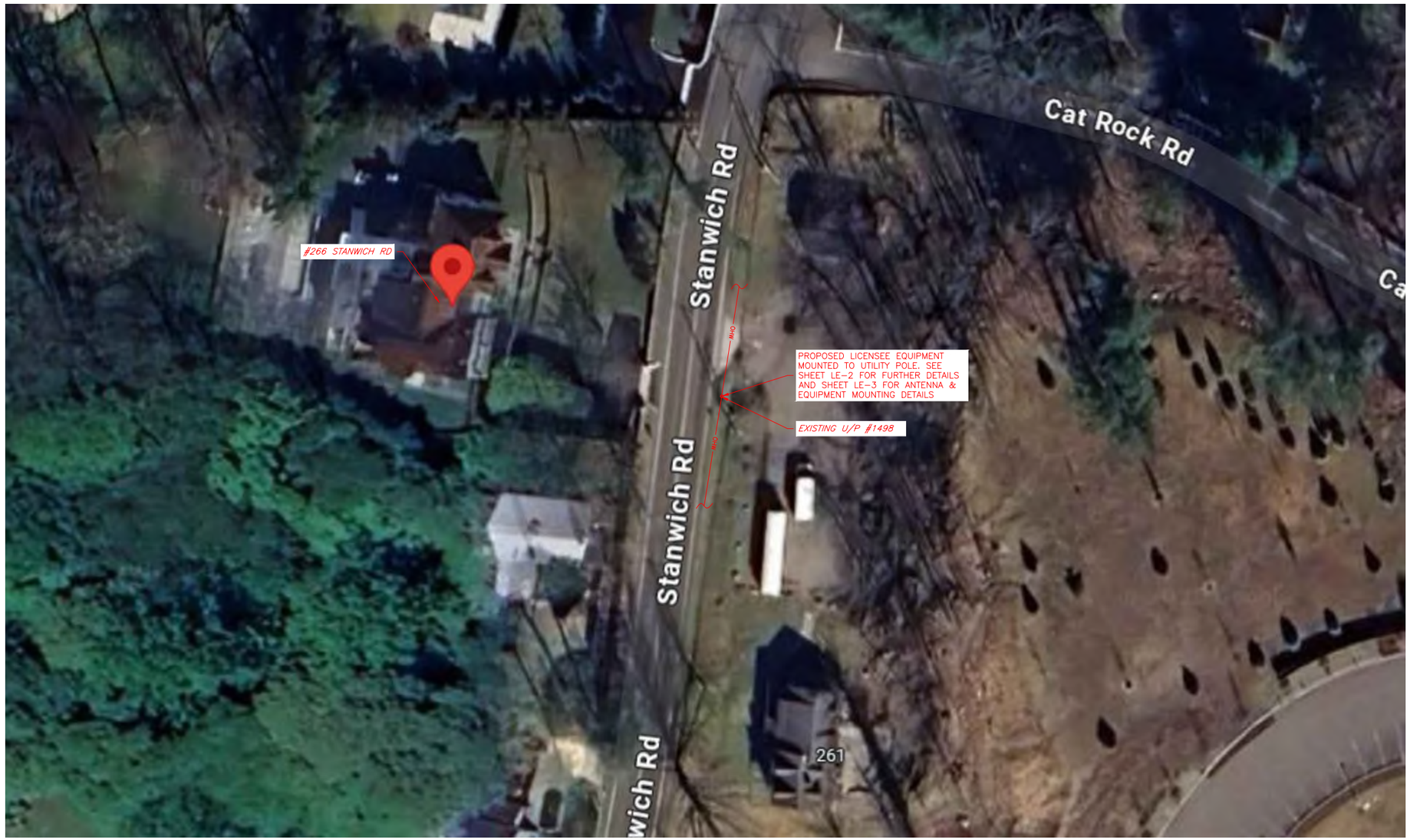

SITE CONTROL POINT:
CENTER OF EXISTING U/P #1498
N 41.073722° (41°-04'-25.399")
W 73.603889° (73°-36'-14.000")

1 / LE-1 LOCATION PLAN/AERIAL IMAGE
SCALE: 1" = 50'

PRESIDING POWER COMPANY
EVERSOURCE

ENGINEER
NB+C™
TOTALLY COMMITTED.
NB+C ENGINEERING SERVICES, LLC.
300 UNICORN PARK DRIVE, SUITE 0501
WOBURN, MA 01801

APPLICANT
verizon
118 FLANDERS ROAD
WESTBORO, MA 01581
(508) 330-3330

SITE INFORMATION
GREENWICH_CT_SC31-0
UTILITY POLE #1498
266 STANWICH RD
GREENWICH, CT 06830

DESIGN RECORD
REVISIONS

REV	DATE	DESCRIPTION	BY
A	06/13/25	PRELIMINARY	AMC

GENERAL NOTES
THIS DOCUMENT IS THE DESIGN PROPERTY AND COPYRIGHT OF NB+C ENGINEERING SERVICES, LLC. AND FOR THE EXCLUSIVE USE BY THE TITLE CLIENT. DUPLICATION OR USE WITHOUT THE EXPRESS WRITTEN CONSENT OF THE CREATOR IS STRICTLY PROHIBITED.

THESE DRAWINGS ARE FORMATTED TO BE FULL SIZE AT 11"x17"
ALL OTHER PRINTED SIZES ARE DEEMED "NOT TO SCALE"

SHEET NUMBER
LE-1

GENERAL NOTES:

1. THESE DRAWINGS ARE DIAGRAMMATIC IN NATURE AND ARE INTENDED TO PROVIDE GENERAL INFORMATION REGARDING THE LOCATION, SIZE AND ORIENTATION OF THE PROPOSED WIRELESS TELECOMMUNICATIONS EQUIPMENT INSTALLATION ON THE UTILITY POLE AND ARE NOT SPECIFICALLY INTENDED FOR CONSTRUCTION.
2. VERIZON WIRELESS SHALL PLACE WEATHER RESISTANT PHENOLIC PLACARDS ON UTILITY POLE AND ANCILLARY EQUIPMENT TO IDENTIFY EQUIPMENT OWNERSHIP & CONTACT INFORMATION TO BE UTILIZED IN CASE OF EMERGENCY.
3. AN ANALYSIS OF THE CAPACITY OF THE EXISTING UTILITY POLE TO SUPPORT THE PROPOSED LOADING HAS NOT BEEN COMPLETED BY NB+C ENGINEERING SERVICES, LLC AND THUS, THESE DRAWINGS ARE SUBJECT TO CHANGE PENDING THE OUTCOME OF A STRUCTURAL ANALYSIS (TO BE PERFORMED BY OTHERS).
4. VERIZON WIRELESS' GENERAL CONTRACTOR SHALL EXTEND EFFORTS TO ENSURE THAT ALL PROPOSED EQUIPMENT MEETS THE REQUIREMENTS OF THE EXISTING UTILITY COMPANY OR COMPANIES CURRENTLY OCCUPYING THE UTILITY POLE AND THE 2017 NATIONAL ELECTRICAL SAFETY CODE.

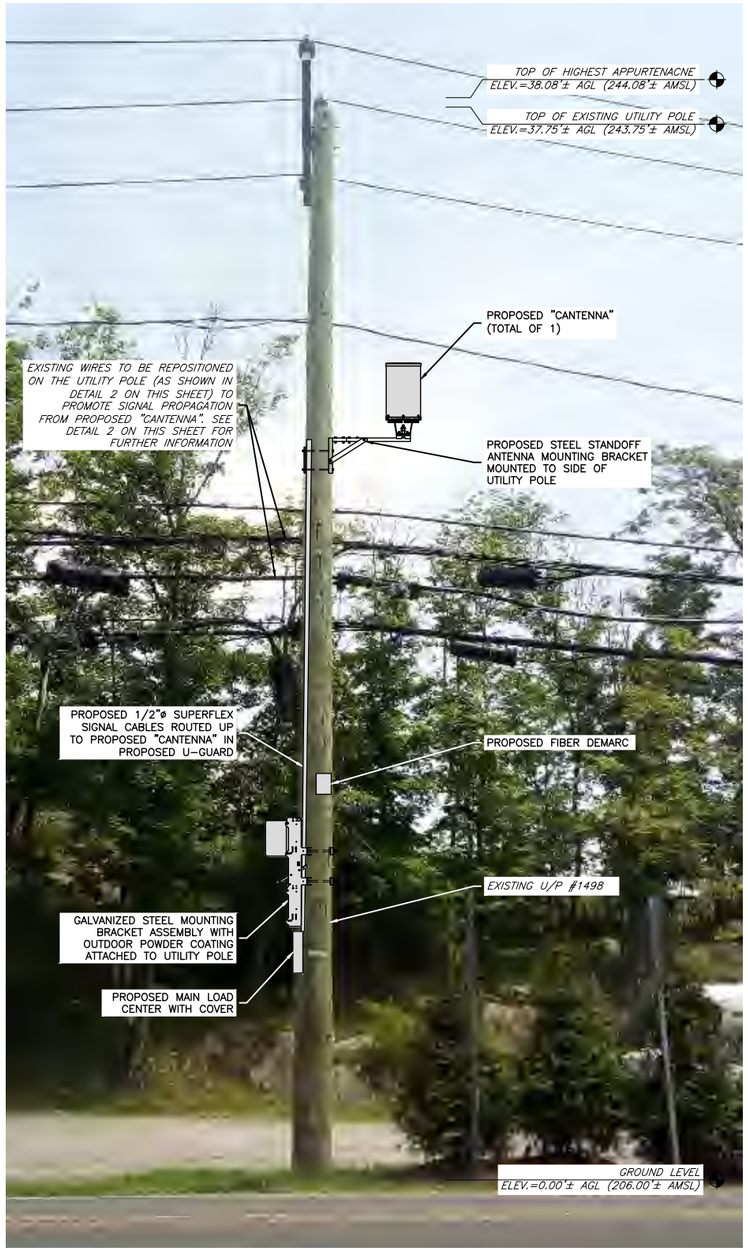

1 LE-2 UTILITY POLE PHOTO (EXISTING CONDITIONS/SCHEMATIC RENDERING)
SCALE: NTS

ANTENNA AND MOUNT NOTE:

CONTRACTOR SHALL POSITION/ROTATE PROPOSED ANTENNA MOUNT/BRACKET IN SUCH A WAY SO AS TO NOT INTERFERE WITH EXISTING STREET LIGHT, PRIMARY POWER CROSSARM(S) (IF PRESENT), BRACKETS, BRACES, SECONDARY POWER SUPPORTS OR ANY OTHER MISCELLANEOUS APPURTENANCES AND RELATED SUPPORT BRACKETS ENCOUNTERED LOCATED ON THE EXISTING UTILITY POLE.

EQUIPMENT AND MOUNT NOTE:

CONTRACTOR SHALL POSITION/ROTATE PROPOSED EQUIPMENT AND ASSOCIATED MOUNTS/BRACKETS IN SUCH A WAY SO AS TO NOT INTERFERE WITH EXISTING WIRES/PANELS ETC. OR ANY OTHER MISCELLANEOUS APPURTENANCES AND RELATED SUPPORT BRACKETS ENCOUNTERED LOCATED ON THE FACE OF THE EXISTING UTILITY POLE.

NOTE:

UTILITY POLE, EXISTING APPURTENANCES AND DETAILS OF PROPOSED INSTALLATION SHOWN SCHEMATICALLY.

LEGEND

- = FIBER BUNDLE/JUMPER
- = AC POWER
- = DC POWER
- = GROUND
- = 1/2"ø SUPERFLEX SIGNAL CABLE

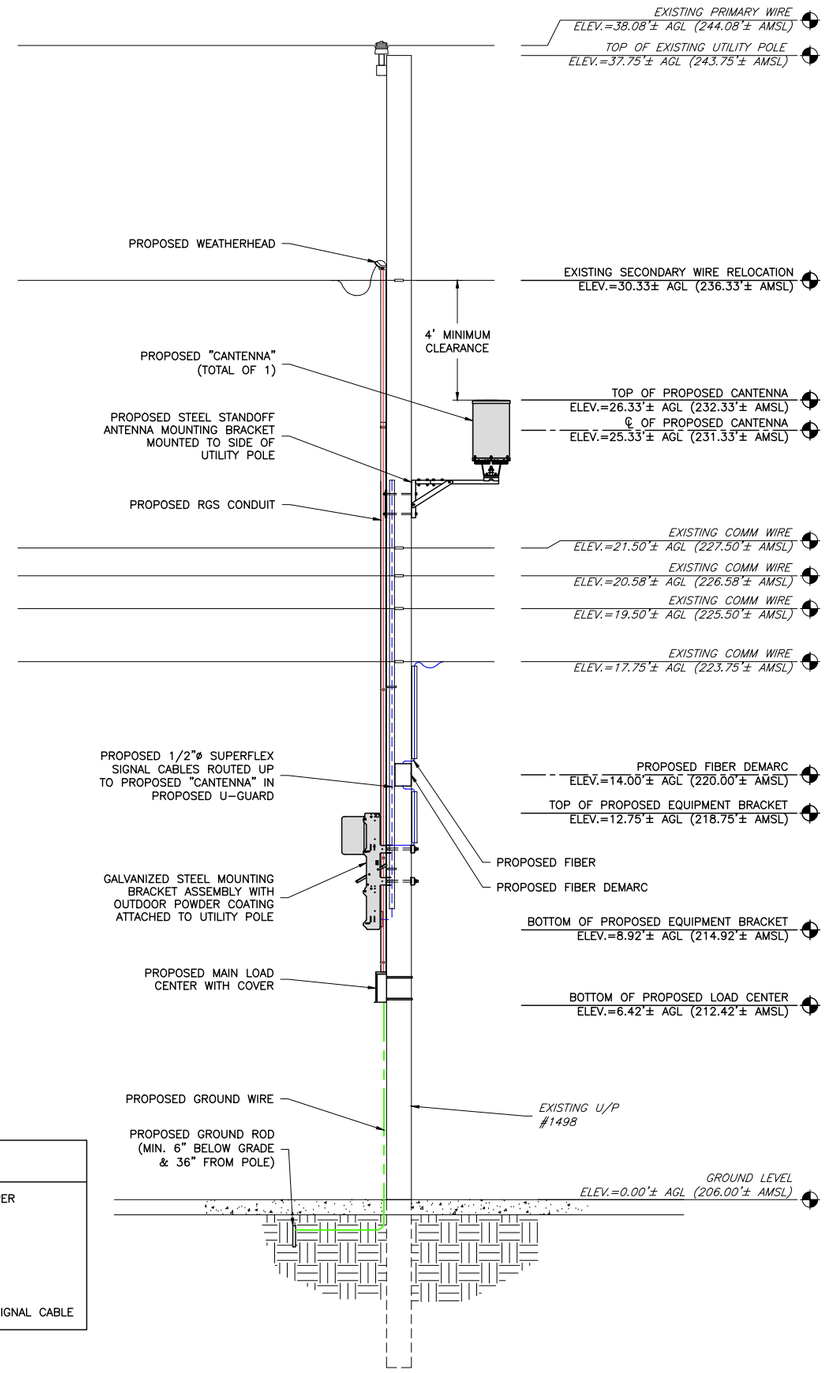

2 LE-2 UTILITY POLE ELEVATION (PROPOSED CONDITIONS)
SCALE: 1" = 5'

ENGINEER

NB+C™ TOTALLY COMMITTED.

NB+C ENGINEERING SERVICES, LLC.
300 UNICORN PARK DRIVE, SUITE 0501
WOBURN, MA 01801

APPLICANT

verizon

118 FLANDERS ROAD
WESTBORO, MA 01581
(508) 330-3330

SITE INFORMATION

GREENWICH_CT_SC31-0
UTILITY POLE #1498
266 STANWICH RD
GREENWICH, CT 06830

DESIGN RECORD

REVISIONS

REV	DATE	DESCRIPTION	BY
A	06/13/25	PRELIMINARY	AMC

GENERAL NOTES

THIS DOCUMENT IS THE DESIGN PROPERTY AND COPYRIGHT OF NB+C ENGINEERING SERVICES, LLC. AND FOR THE EXCLUSIVE USE BY THE TITLE CLIENT. DUPLICATION OR USE WITHOUT THE EXPRESS WRITTEN CONSENT OF THE CREATOR IS STRICTLY PROHIBITED.

THESE DRAWINGS ARE FORMATTED TO BE FULL SIZE AT 11"x17"
ALL OTHER PRINTED SIZES ARE DEEMED "NOT TO SCALE"

SHEET NUMBER

LE-2

Attachment 5, Page 5 of 24



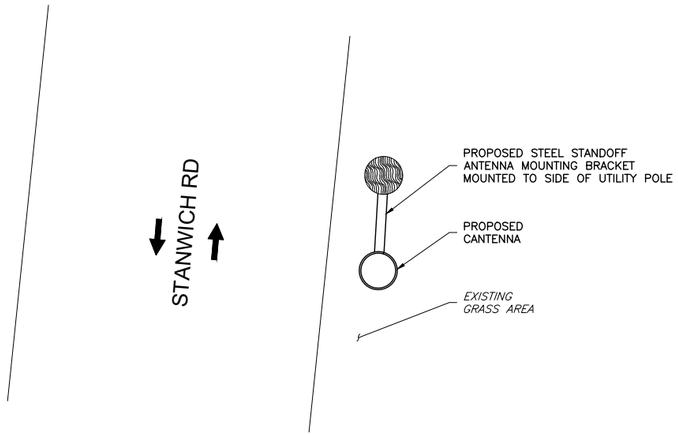

1 / LE-3 ANTENNA ORIENTATION PLAN
SCALE: NTS

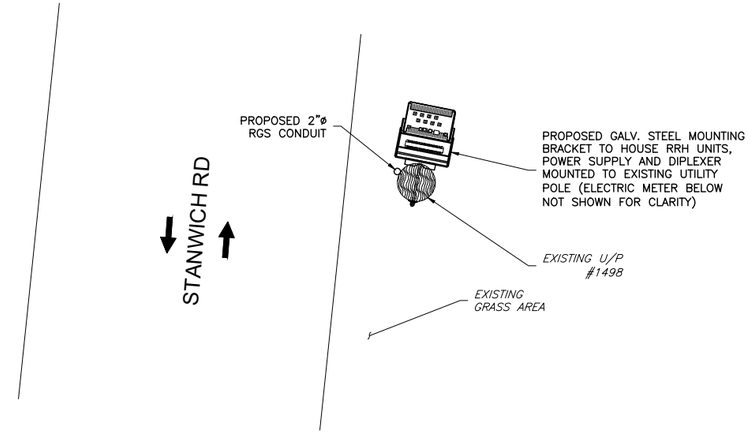

2 / LE-3 ANCILLARY EQUIPMENT ORIENTATION PLAN
SCALE: NTS

NOTES:
1.) CONFIRM DOWNTILT REQUIREMENTS (IF ANY) AND AZIMUTH SPECIFICATIONS WITH VERIZON WIRELESS RF ENGINEER AT TIME OF CONSTRUCTION.

2.) MOUNT SHALL BE INSTALLED IN SUCH A WAY TO ENSURE PLUMB INSTALLATION OF "CANTENNA".

3.) UTILITY POLE APPURTENANCES NOT SHOWN FOR CLARITY.

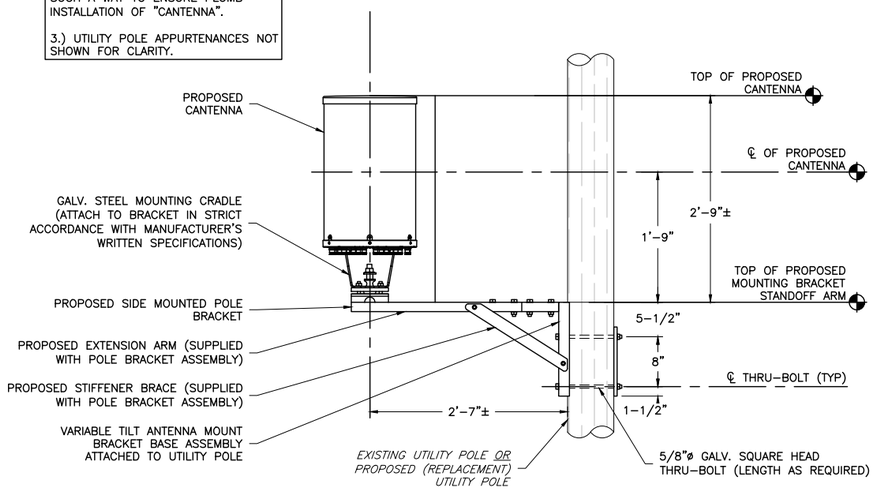

3 / LE-3 CANTENNA MOUNT DETAIL
SCALE: NTS

ITEM ID (SEE DETAIL)	DESCRIPTION	WEIGHT (LBS)
1	MOUNTING BRACKET	28.0±
2	UPPER RRH UNIT	90.0±
3	POWER SUPPLY	25.6±
		TOTAL – 143.6± (SAY 145 LBS)

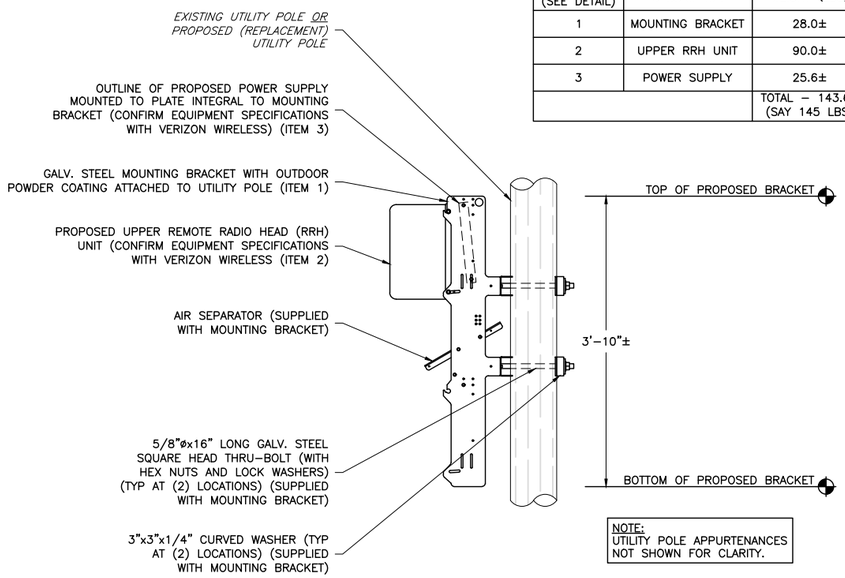

NOTE:
UTILITY POLE APPURTENANCES NOT SHOWN FOR CLARITY.

4 / LE-3 ANCILLARY EQUIPMENT MOUNTING BRACKET DETAIL
SCALE: NTS

ENGINEER

NB+C™
TOTALLY COMMITTED.
NB+C ENGINEERING SERVICES, LLC.
300 UNICORN PARK DRIVE, SUITE 0501
WOBURN, MA 01801

APPLICANT

verizon
118 FLANDERS ROAD
WESTBORO, MA 01581
(508) 330-3330

SITE INFORMATION

GREENWICH_CT_SC31-0
UTILITY POLE #1498
266 STANWICH RD
GREENWICH, CT 06830

DESIGN RECORD

REVISIONS

REV	DATE	DESCRIPTION	BY
A	06/13/25	PRELIMINARY	AMC

GENERAL NOTES

THIS DOCUMENT IS THE DESIGN PROPERTY AND COPYRIGHT OF NB+C ENGINEERING SERVICES, LLC. AND FOR THE EXCLUSIVE USE BY THE TITLE CLIENT. DUPLICATION OR USE WITHOUT THE EXPRESS WRITTEN CONSENT OF THE CREATOR IS STRICTLY PROHIBITED.

THESE DRAWINGS ARE FORMATTED TO BE FULL SIZE AT 11"x17"
ALL OTHER PRINTED SIZES ARE DEEMED "NOT TO SCALE"

SHEET NUMBER

LE-3

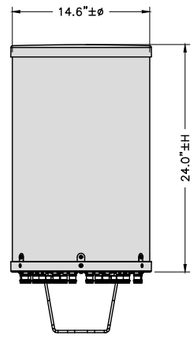

SMALL CELL CANTENNA	
DIMENSIONS:	14.6"±ø x 24.0"±H
WEIGHT:	32.6± LBS
QUANTITY:	TOTAL OF 1

1 / LE-4 COMMSCOPE NNVVS4-360S-BF2
SCALE: NTS

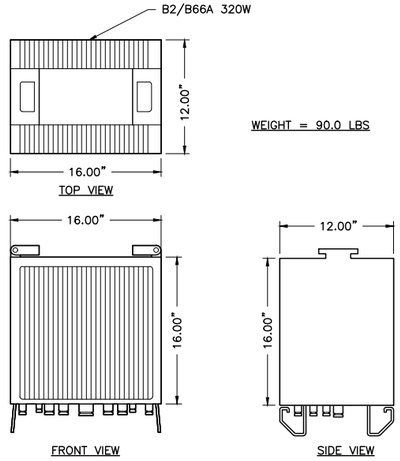

2 / LE-4 B2/B66A RF4439D-25A (REMOTE RADIO HEAD)
NTS

MAIN LOAD CENTER

CKT #	1	2	3	4	5	6	7	8
DESCRIPTION	DUAL POLE MAIN BREAKER		DUAL POLE SURGE ARRESTOR		DUAL POLE PDU		SPARE	SPARE
AMP	100		20		20		–	–

3 / LE-4 ELECTRICAL LOAD CENTER PANEL SCHEDULE
SCALE: NTS

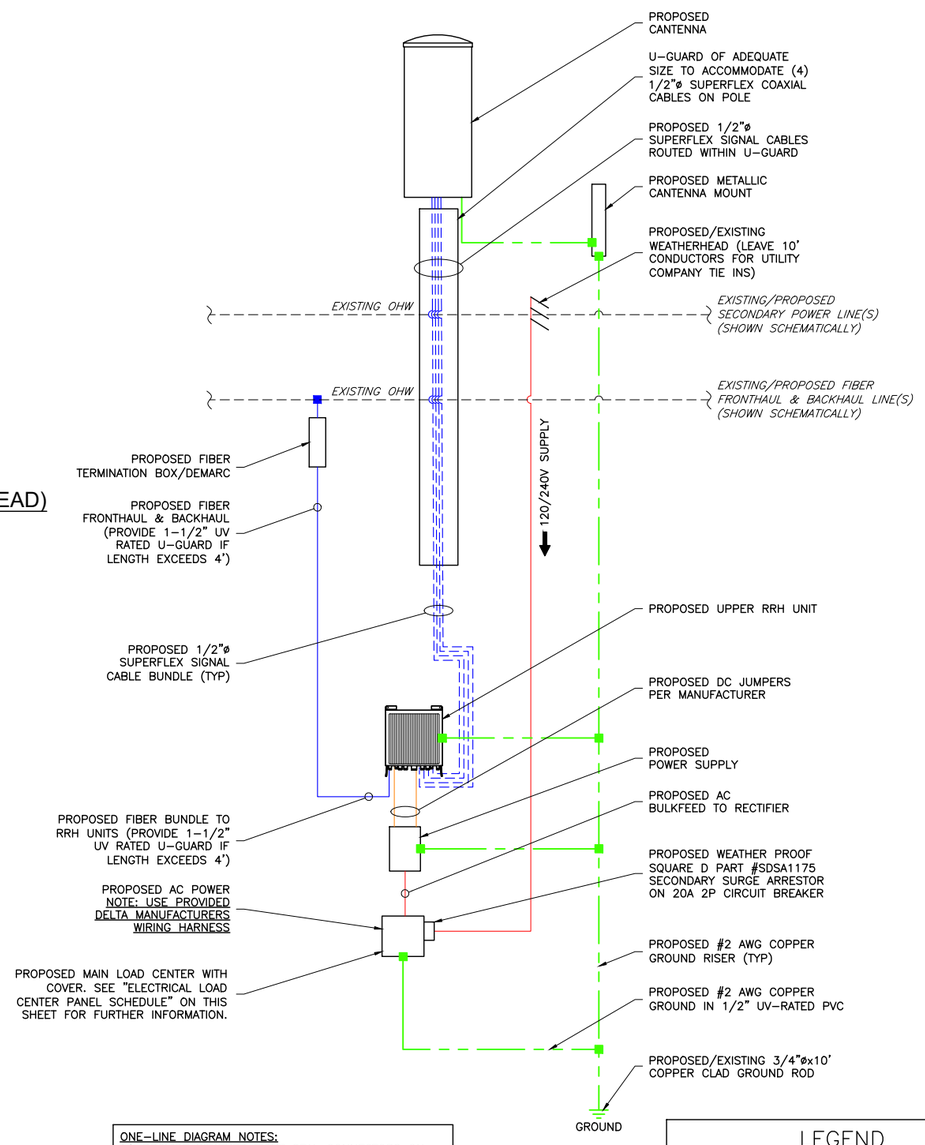

ONE-LINE DIAGRAM NOTES:
1.) PROVIDE WEATHER TIGHT SEAL CONNECTORS ON ALL CONNECTIONS EACH SIDE OF ENCLOSURE HOUSING

2.) COORDINATE ANY FURTHER MISCELLANEOUS WIRING AND CONDUIT REQUIREMENTS WITH VERIZON WIRELESS AND ELECTRIC COMPANY

LEGEND
- = FIBER BUNDLE/JUMPER
- = AC POWER
- = DC POWER
- = GROUND
- = 1/2"ø SUPERFLEX SIGNAL CABLE

4 / LE-4 FIBER/ELECTRICAL ONE-LINE DIAGRAM
SCALE: NTS

ENGINEER

NB+C ENGINEERING SERVICES, LLC.
300 UNICORN PARK DRIVE, SUITE 0501
WOBURN, MA 01801

APPLICANT

verizon
118 FLANDERS ROAD
WESTBORO, MA 01581
(508) 330-3330

SITE INFORMATION

GREENWICH_CT_SC31-0
UTILITY POLE #1498
266 STANWICH RD
GREENWICH, CT 06830

DESIGN RECORD

REVISIONS

REV	DATE	DESCRIPTION	BY
A	06/13/25	PRELIMINARY	AMC

GENERAL NOTES

THIS DOCUMENT IS THE DESIGN PROPERTY AND COPYRIGHT OF NB+C ENGINEERING SERVICES, LLC. AND FOR THE EXCLUSIVE USE BY THE TITLE CLIENT. DUPLICATION OR USE WITHOUT THE EXPRESS WRITTEN CONSENT OF THE CREATOR IS STRICTLY PROHIBITED.

THESE DRAWINGS ARE FORMATTED TO BE FULL SIZE AT 11"x17"
ALL OTHER PRINTED SIZES ARE DEEMED "NOT TO SCALE"

SHEET NUMBER

LE-4





Attachment 5, Page 16 of 35

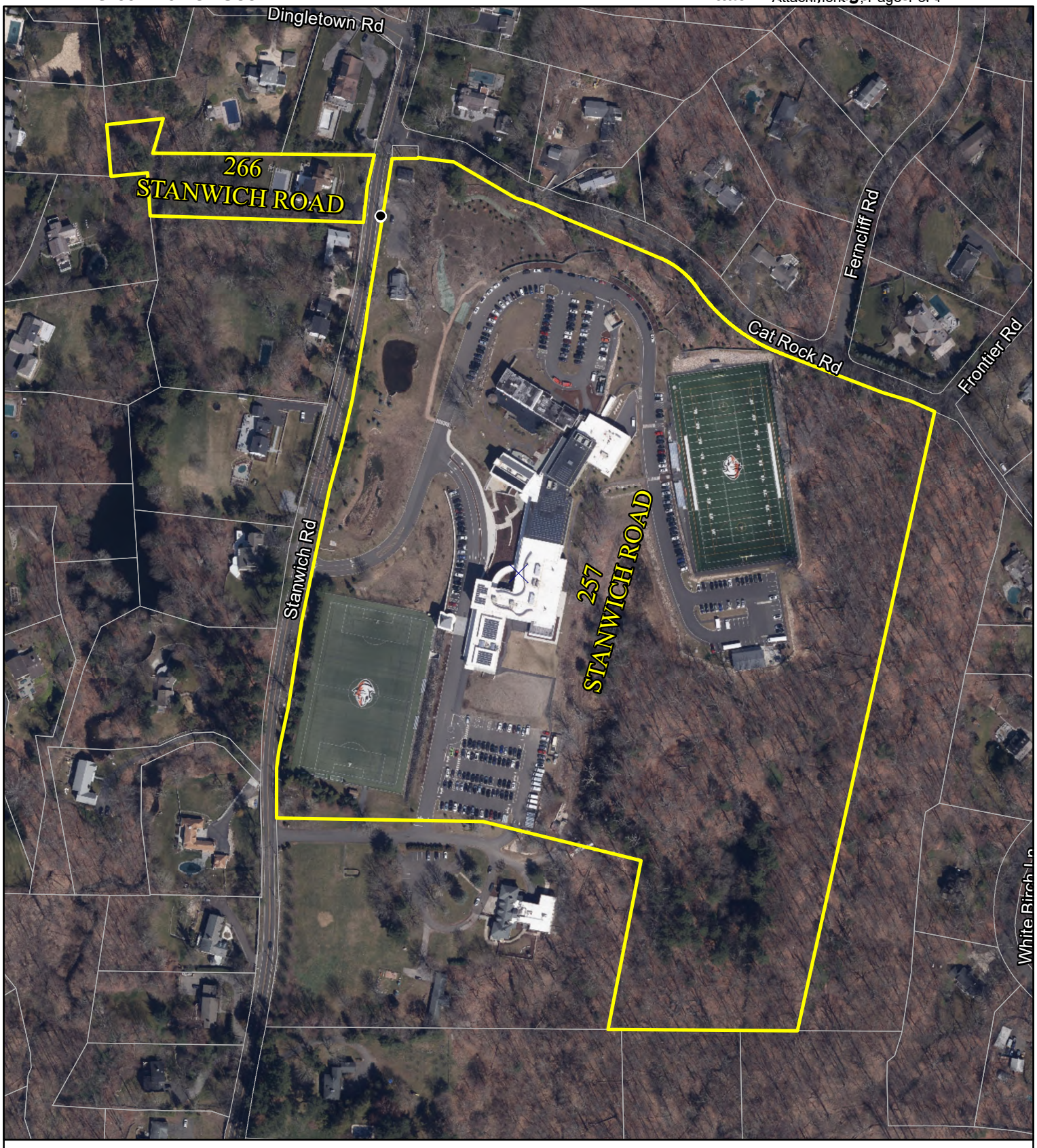

Immediate Adjoining Property Owners

Proposed Small Cell Facility
GREENWICH CT SC31 (Pole #1498)
Stanwich Road across from 266 Stanwich Road
Greenwich, CT

● Pole of Interest
Immediate Adjoining Property Owner Parcel
Approx. Parcel Boundary

0 125 250 500
Feet

N
W E
S

verizon

NEGEO
New England GeoSystems
420 East Main Street - Suite 18
Branford, CT 06405

Aerial Imagery Source: State of CT (2023). Map produced May 2026. Parcel boundaries collected or developed by New England Geosystems.

Guide to Public Hearings for Antenna Attachments to Utility Poles

The Public Utilities Regulatory Authority

OVERVIEW

Background

Certain types of telecommunications companies, such as commercial mobile radio service (CMRS) providers, (described as “Company” in this guide) are installing small cell wireless facilities designed to increase their ability to handle cellular voice and data traffic in specified project areas. CMRS provider is a term described in 47 C.F.R. Part 20, et. seq.

In the case of a proposal to install an antenna on a utility pole in the public right-of-way, the Public Utilities Regulatory Authority (PURA or Authority) determines whether the installation is safe, and, if so, allows the installation.

A Company must apply to the PURA for approval of its construction plan to install a small cell wireless telecommunications facility on a utility pole within the public right-of-way.

You may have received written notification about a specific construction plan or have been made aware of a construction plan. This guide is being provided as an introduction to the PURA docket process.

How did this location get selected for an antenna?
What does the antenna look like? Is the antenna like a cell tower?

The Company conducts a survey of a geographic area for small cell installations when its capability to accommodate cellular service traffic is near or at capacity, the point at which it cannot provide reliable service.

The Company then looks for utility pole locations in this case, where it can install an antenna and its associated equipment.

There are pole owner restrictions regarding where an antenna may be located. In some locations, utility pole owners may deny requests for these attachments. For example, some utility poles may already be heavily encumbered by utility equipment and would not accommodate an antenna installation. Pole Owner: Entity having the right to grant licenses for Attachments to its utility poles in its operating territory (e.g., Eversource, Frontier and United Illuminating).

The size and visual impact of the antenna and its related equipment is roughly equivalent to equipment commonly mounted to poles throughout the State, such as electric transformers. The antenna is not a cell tower. The utility pole is the same as other poles commonly used throughout the state.

PURA has attached photos of typical antenna installations to aid you in understanding the size of the equipment involved. In some cases, the antenna is located on a side-mounted bracket on the pole when electric lines are at the top of the pole.

PURA Docket Process

Step — Company Notification to Adjoining Property Owner

•The CMRS provider notifies the Adjoining Property Owner[1] (APO) and advises the affected municipality in writing via certified letter of the planned construction and given 30 days to respond with an objection. **There is no PURA docket at this stage.*[2]

•What types of issues qualify as grounds for an objection? The Authority considers issues related to safety in its consideration of antenna construction. It does not consider issues of Radio Frequency emissions (established by the Federal Communications Commission) or visual impact, aesthetics or property value impact, which are subjective.

Step — APO Response to Company Notification

•APOs are allowed 30 days to respond to the Company or PURA to advise as to whether they are opposed or not. **There is no PURA docket at this stage.*

Step — Company Application Filed with PURA

•A PURA docket is initiated at the time the Company files its Application to PURA.

1 Who is considered an APO? Any owner of property actually physically contiguous to the affected section of the public right-of-way. People who do not own property actually physically contiguous to the affected section of the public right-of-way may still comment on the installation, but only owners of property actually physically contiguous to the affected section of the public right-of-way are given status by the Authority to object to construction. Tenants are not APO's.

2 Anyone contacting PURA prior to a docketed proceeding being initiated will receive undocketed correspondence from PURA containing general information about the process and related statutory information.

Step PURA Acknowledgement Letter/Notice of Proceeding Issued

•If there are no APOs opposed to the project, the PURA issues a Notice of Proceeding in the docket and will proceed with review and a decision.

•If there are APOs opposed to the project, PURA issues an Acknowledgement Letter via certified mail to the APOs opposed that are opposed to the construction as noted in the Company application.

•APOs that have not filed an opposition to the Company and Non APOs will not receive PURA communication.

Step Objecting APO Response to PURA

•APOs that filed in opposition to the Company will receive an Acknowledgement Letter from the PURA and are allowed 30 days to respond to the PURA to advise as to whether they continue to oppose the attachment and whether they are requesting a formal hearing.

•Non APOs may file a public comment.

Step Adjoining Property Owner Requests Hearing

•If the APO responds to the PURA within the 30-day time period stating that they continue to oppose the attachment and a detailed explanation for their objection and request for a hearing, PURA will schedule a hearing.

•If the APO does not respond to the PURA within the 30-day time period, the PURA will proceed with review and decision.

Step Hearing Held, if scheduled

- A hearing will be scheduled based on PURA, Company, and Party availability.[3]

Step Late Filed Exhibits

- If late filed exhibits (LFEs) are requested during the hearing, they must be filed with the PURA (typically within 10 days.) The LFE due date and time schedule will be discussed at the conclusion of the hearing.

Step Late Filed Exhibits Hearing, if needed

- After all parties have reviewed the LFEs, it will be determined whether a late filed exhibit hearing is required. If it is required, a date will be determined based on PURA, Company, and Party availability.[3]

3 Hearings are held at PURA offices, Ten Franklin Square, New Britain, Connecticut.

Step Briefing Period, if applicable

- A briefing period may follow the hearing. Briefs are written arguments about issues the Commissioners must decide. They are usually written by attorneys for the Company, PURA, and others. Participating APOs may also file a brief.

Step PURA Proposed Final Decision

- The PURA decides a case based on the information contained in the record made over the course of the proceeding. When the hearings are finished and the evidentiary record is closed, information cannot be added to the record unless the proceeding is formally reopened.
- The PURA can use only the proceeding record as the basis for its decision. The PURA Commissioners read the record and proceeding transcripts[4] when formulating their decision.

Step Written Exceptions / Oral Argument

- If a hearing was held, parties will have an opportunity to file written exceptions to the PURA Proposed Final Decision and also can request Oral Argument.

4 Transcripts can be purchased through the Court Reporting Agency. Transcripts are not available on the PURA website until after the Final Decision is issued and the appeal period has expired.

Step Final Decision

- After the Commissioners reach a decision, an order is issued during a Regular or Special Meeting.
- Copies of the decision are available on the PURA's website in its Final Decision Database or can be obtained by calling the Consumer Affairs Unit at 1-800-382-4586.

FAQ/General Information

What is a public hearing all about?

A public hearing is one step in determining whether the Authority will allow construction of the antenna.

Unless otherwise noted in a Notice of Hearing, the Authority holds all hearings at its offices at 10 Franklin Square, New Britain.

The Authority has a long tradition of encouraging public participation in the regulation of the state's utilities.

The PURA public hearing process offers the opportunity for consumers, local government officials, industry representatives, and others to bring their thoughts and concerns to the attention of the Authority's Commissioners in a timely manner. Bringing these concerns and views to a public hearing is essential if the Commissioners are to reach the most fair and reasonable decision possible.

Any person or entity given status (refer to Footnote 1) during the proceeding may ask the Company questions regarding the proposed installation after the company has adopted its testimony and is ready for cross examination.

Please keep in mind that both the Company and the Objectors have the same due process rights to participate in the hearing process, as well as to receive a timely decision based on the relevant facts and applicable law.

I've never testified before The PURA. Is it difficult?

No, it is easy to testify. You do not need a lawyer.

At the beginning of the hearing, the Commissioner / Hearing Officer will ask if there are any members of the public who wish to speak for the record. At that time, simply stand up or raise your hand. You will be sworn in and invited to tell your story in your own words. You may also submit documents or photos relating to your testimony.

After you present your testimony the Authority staff and other parties may cross examine you (ask you questions).

Once that is completed, Commissioners, Hearing Officers and any of the parties to the case who may be in attendance cannot answer questions during this portion of the hearing process; this is their opportunity to hear your testimony.

How do I conduct cross examination of the witnesses?

Cross examination is asking questions of the sworn witnesses regarding the application, documents filed and any oral testimony given at the hearing. Keep in mind that the Commissioners, Hearing Officers, Company attorneys and Authority staff are not subject to cross examination.

What if I cannot attend the public hearing; if a hearing is scheduled?

If you are an adjoining property owner and are unable to attend a public hearing, if one is scheduled, but wish to make their position known to the Authority, you may mail your comments to:
Public Utilities Regulatory Authority
Attn: Executive Secretary
10 Franklin Square New
Britain, CT 06051

Comment may also be provided via email addressed to: PURA.executivesecretary@ct.gov

Non APOs may file a public comment.

Please include the docket number of the proceeding in all correspondence to the PURA.

PURA does not accept comments about cases over the phone. Your comments must be in writing to be included as part of the record in the case. With a public hearing, the proceeding becomes a contested case. You may not have ex parte communications regarding facts or legal issues relevant to your case with the PURA Commissioners or staff outside of the hearings or noticed meetings. However, you may contact the case coordinator for assistance regarding how the process (dates and times of hearings, how to file etc.) works.

The Public Utilities Regulatory Authority (PURA)

PURA is statutorily charged with regulating the rates and services of Connecticut's investor owned electricity, natural gas, water and telecommunication companies and is the franchising authority for the state's cable television companies.

PURA employs a staff of subject matter experts in Accounting, Finance, Engineering, Law and Customer Service. On occasion, the Authority will hire experts if needed to supplement available staff in complex proceedings. All decisions issued by PURA have the force of Law.

http://www.ct.gov/pura/site/default.asp

The Office of Consumer Counsel (OCC)

The OCC is the designated and official advocate of the ratepayer.

For contested PURA proceedings, the OCC is an automatic Party/Participant and has the ability to appeal decisions to the Connecticut Superior Court.

http://www.ct.gov/occ/site/default.asp

Other useful information regarding the docket process:

Filings and Evidence

All filings of evidence, exhibits and testimony are Public Information, except for material submitted under a Protective Order. The Authority may subpoena witnesses and all testimony is provided under Oath and is transcribed into a Public Record.

Example of a Utility Pole Top-Mounted Antenna and Related Facilities



Cellco Partnership d/b/a Verizon Wireless
Connecticut Small Cell Wireless Installation

Attachment C
Top Mount Antenna



Note: The Antenna is located at the very top of the pole in this example. The wireless system connection for the antenna system is the lowest utility box attached to the pole in this example.

Example of a Utility Pole Side-Mounted Antenna and Related Facilities

Cellco Partnership d/b/a Verizon Wireless
Connecticut Small Cell Wireless Installation

Attachment C
Side Mount Antenna

